Anritsu

ME4510B

Digital Microwave System Analyzer

Service Manual

Read this manual before using the equipment.
Keep this manual with the equipment.

ME4510B

Digital Microwave System Analyzer

Service Manual

Eighth Edition

Read this manual before using the equipment.
Keep this manual with the equipment.

Measuring Instruments Division
Measurement Group

ANRITSU CORPORATION

Document No.: M-W0637BE-8.0

Safety Symbols

To prevent the risk of personal injury or loss related to equipment malfunction, Anritsu Corporation uses the following safety symbols to indicate safety-related information. Insure that you clearly understand the meanings of the symbols BEFORE using the equipment.
Some or all of the symbols may not be used on this equipment. In addition, when drawings are included in this manual, labels on the equipment may not be shown on them.

Safety Symbols Used in Manual

DANGER ⚠ This indicates a very dangerous procedure that could result in death or serious injury if not performed properly.

WARNING ⚠ This indicates a hazardous procedure that could result in death or serious injury if not performed properly.

CAUTION ⚠ This indicates a hazardous procedure or danger that could result in light-to-severe injury, or loss related to equipment malfunction, if proper precautions are not taken.

Safety Symbols Used on Equipment and/or in Manual

The following safety symbols are used inside or on the equipment near operation locations, and/or in manual to provide information about safety items and operation precautions. Insure that you clearly understand the meanings of the symbols and take the necessary precautions BEFORE using the equipment.

This indicates a prohibited operation. The prohibited operation is indicated symbolically in or near the barred circle.

This indicates an obligatory safety precaution. The obligatory operation is indicated symbolically in or near the circle.

This indicates warning or caution. The contents are indicated symbolically in or near the triangle.

This indicates a note. The contents are described in the box.

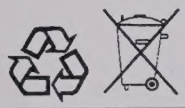

These indicate that the marked part should be recycled.

ME4510B
Digital Microwave System Analyzer
Service Manual

May 1991 (First Edition)
January 1999 (Eighth Edition)

Copyright © 1991 – 1999, ANRITSU CORPORATION.

All rights reserved. No part of this manual may be reproduced without the prior written permission of the publisher.

The contents of this manual may be changed without prior notice.

Printed in Japan

Strategies for the Year 2000 problem

This equipment does not suffer from the Year 2000 problem (Note). However, we recommend that you should check whether your application software, in which this equipment is used as a part, has any Year 2000 bugs because this equipment indicates a year using its last two digits.

Note: The Year 2000 problem

The Year 2000 problem is defined as follow:

Systems computing date data has represented the year as a two-digit number (for example, 1997 is represented as "97"). When the Year 2000 comes or data of 2000 or later is to be computed, the year is indicated as "00", "01" and so on, which causes troubles in comparison of dates, sorting using dates and computation of date data.

Another problem is that Year 2000, a leap year, is not recognized as so.

For Safety

For safety, do not open the equipment covers.

If repair is required, contact the sales representative, branch office, or agent at the telephone number and address given in this document or in the equipment operation manual.

Although not recommended by Anritsu Corporation, if it is really imperative to open the covers for emergency repair, take great care not to touch any dangerous parts.
Always request repair by a trained engineer who understands the hazards.

Anritsu Corporation will not accept liability for any injuries sustained as a result of opening the equipment covers.

For Safety

or

Repair

WARNING ⚠

WARNING ⚠

1. ALWAYS refer to the operation manual when working near locations at which the alert mark shown on the left is attached. If the operation, etc., is performed without heeding the advice in the operation manual, there is a risk of personal injury. In addition, the equipment performance may be reduced.
   Moreover, this alert mark is sometimes used with other marks and descriptions indicating other dangers.

2. When supplying power to this equipment, connect the accessory 3-pin power cord to a 3-pin grounded power outlet. If a grounded 3-pin outlet is not available, before supplying power to the equipment, use a conversion adapter and ground the green wire, or connect the frame ground on the rear panel of the equipment to ground. If power is supplied without grounding the equipment, there is a risk of receiving a severe or fatal electric shock.

3. This equipment cannot be repaired by the user. DO NOT attempt to open the cabinet or to disassemble internal parts. Only Anritsu-trained service personnel or staff from your sales representative with a knowledge of electrical fire and shock hazards should service this equipment.

Changing Fuse

CAUTION ⚠

CAUTION ⚠

1. Before changing the fuses, ALWAYS remove the power cord from the poweroutlet and replace the blown fuses. ALWAYS use new fuses of the type and rating specified on the fuse marking on the rear panel of the cabinet.

   T□□□ A indicates a time-lag fuse.
   □□□A or F□□□ A indicate a normal fusing type fuse.

   There is risk of receiving a fatal electric shock if the fuses are replaced with the power cord connected.

Equipment Certificate

Anritsu Corporation certifies that this equipment was tested before shipment using calibrated measuring instruments with direct traceability to public testing organizations recognized by national research laboratories including the Electrotechnical Laboratory, the National Research Laboratory and the Communication Research laboratory, and was found to meet the published specifications.

Anritsu Warranty

Anritsu Corporation will repair this equipment free-of-charge if a malfunction occurs within 1 year after shipment due to a manufacturing fault, provided that this warranty is rendered void under any or all of the following conditions.

- The fault is outside the scope of the warranty conditions described in the operation manual.
- The fault is due to misoperation, misuse, or unauthorized modification or repair of the equipment by the customer.
- The fault is due to severe usage clearly exceeding normal usage.
- The fault is due to improper or insufficient maintenance by the customer.
- The fault is due to natural disaster including fire, flooding and earthquake, etc.
- The fault is due to use of non-specified peripheral equipment, peripheral parts, consumables, etc.
- The fault is due to use of a non-specified power supply or in a non-specified installation location.

In addition, this warranty is valid only for the original equipment purchaser. It is not transferable if the equipment is resold.

Anritsu Corporation will not accept liability for equipment faults due to unforeseen and unusual circumstances, nor for faults due to mishandling by the customer.

Anritsu Corporation Contact

If this equipment develops a fault, contact Anritsu Corporation or its representatives at the address in this manual.

(Blank)

Note:

Switching the power voltages:

The power voltages of the ME4510B Transmitter can be switched as follows.

Switching is performed after removing the plug from the AC outlet and verifying that the electricity is turned OFF.

(1) Switching the power voltage of the Transmitter

Remove the top cover and set switches S2 and S3 to the appropriate power voltage as follows:

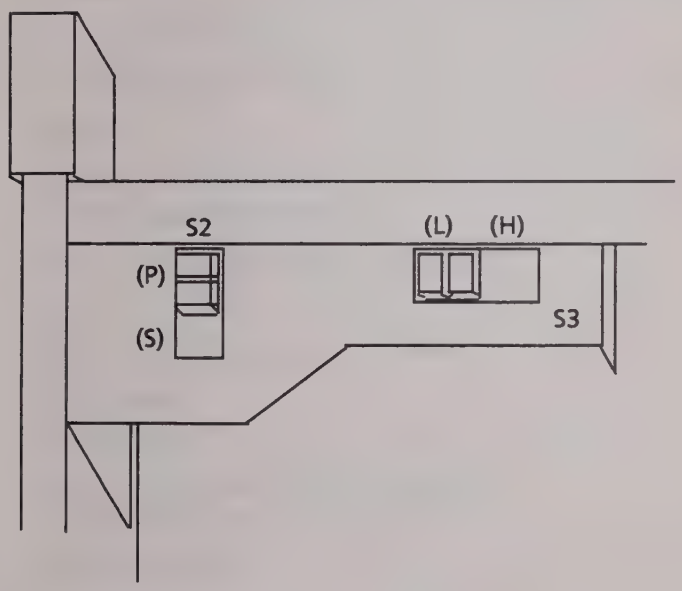

LINE SELECT

S2	S3	AC LINE
P	L	100 to 113 V
P	H	114 to 127 V
S	L	200 to 226 V
S	H	227 to 254 V

Part Names & Part Numbers

Please specify the part numbers shown in the parts list when making inquiries or when ordering parts. There may be a difference between the names of parts used in this manual and the parts actually used in the equipment or supplied for repair. This is because equivalent parts with the same functions, performance and reliability as the parts specified in the circuit diagrams and parts list have been used or supplied. Since the parts are equivalent, they have absolutely no adverse effect on the equipment specified functions, performance or reliability.

TABLE OF CONTENTS

For Safety iii

SECTION 1 GENERAL 1-1

SECTION 2 MECHANICAL CONFIGURATION 2-1
2.1 Introduction 2-1
2.2 Transmitter 2-2
2.2.1 Assembly Diagrams 2-2
2.2.2 Mechanical Parts List 2-7
2.3 Receiver 2-11
2.3.1 Assembly diagrams 2-11
2.3.2 Mechanical Parts List 2-19
2.4 CRT Faceplate Cleaning Procedure 2-24

SECTION 3 TROUBLESHOOTING AND REPAIR 3-1
3.1 Introduction 3-1
3.2 Service Kit 3-2
3.3 A List of Equipment Required for Troubleshooting and Repair 3-4
3.4 Circuit Reference 3-5
3.5 Troubleshooting and Repair 3-8
3.5.1 Troubleshooting the transmitter 3-9
3.5.2 Troubleshooting the receiver 3-12
3.6 Circuit Description of the Transmitter 3-27
3.6.1 Overall circuit description 3-27
3.6.2 Detailed circuit description of each PC board and unit 3-34
3.7 Circuit Description of Receiver 3-39
3.7.1 Overall circuit description 3-39
3.7.2 Detailed circuit description of each PC board and unit 3-48

SECTION 4 CALIBRATION AND ADJUSTMENT 4-1
4.1 Introduction 4-1
4.2 Transmitter 4-2
4.2.1 Output level —far-end mode 4-2
4.2.2 IM3 output level 4-4
4.3 Receiver 4-6
4.3.1 IF input level in far-end mode 4-6
4.3.2 Center marker in far-end mode 4-8
4.3.3 Side marker in far-end mode 4-10
4.3.4 Span width in spectrum mode 4-14

SECTION 5 REPLACEMENT PARTS 5-1
5.1 Introduction 5-1
5.2 Reading Capacitance and Resistance 5-3
5.3 Electrical Parts Ordering Procedure 5-7
5.4 Parts List 5-8

APPENDIX A INSTALLATION OF OPTION 01 RS-232C A-1

SECTION 1
GENERAL

This service manual describes the methods for maintaining and repairing the ME4510B Digital Microwave System Analyzer (DMSA).

For specification, operating instructions, and a detailed panel control description of the ME4510B; refer to the separate operation manual.

SECTION 2
MECHANICAL CONFIGURATION

2.1 Introduction

This section contains assembly diagrams and mechanical parts lists for the ME4510B Transmitter and Receiver.

WARNING

Before disassembling or reassembling the ME4510B, turn the POWER switch OFF and disconnect the power supply cord from the AC outlet.

2.2 Transmitter

2.2.1 Assembly diagrams

Figures 2-1 to 2-4 are assembly diagrams for the ME4510B Transmitter.

Table 2-1 comprises a parts list.

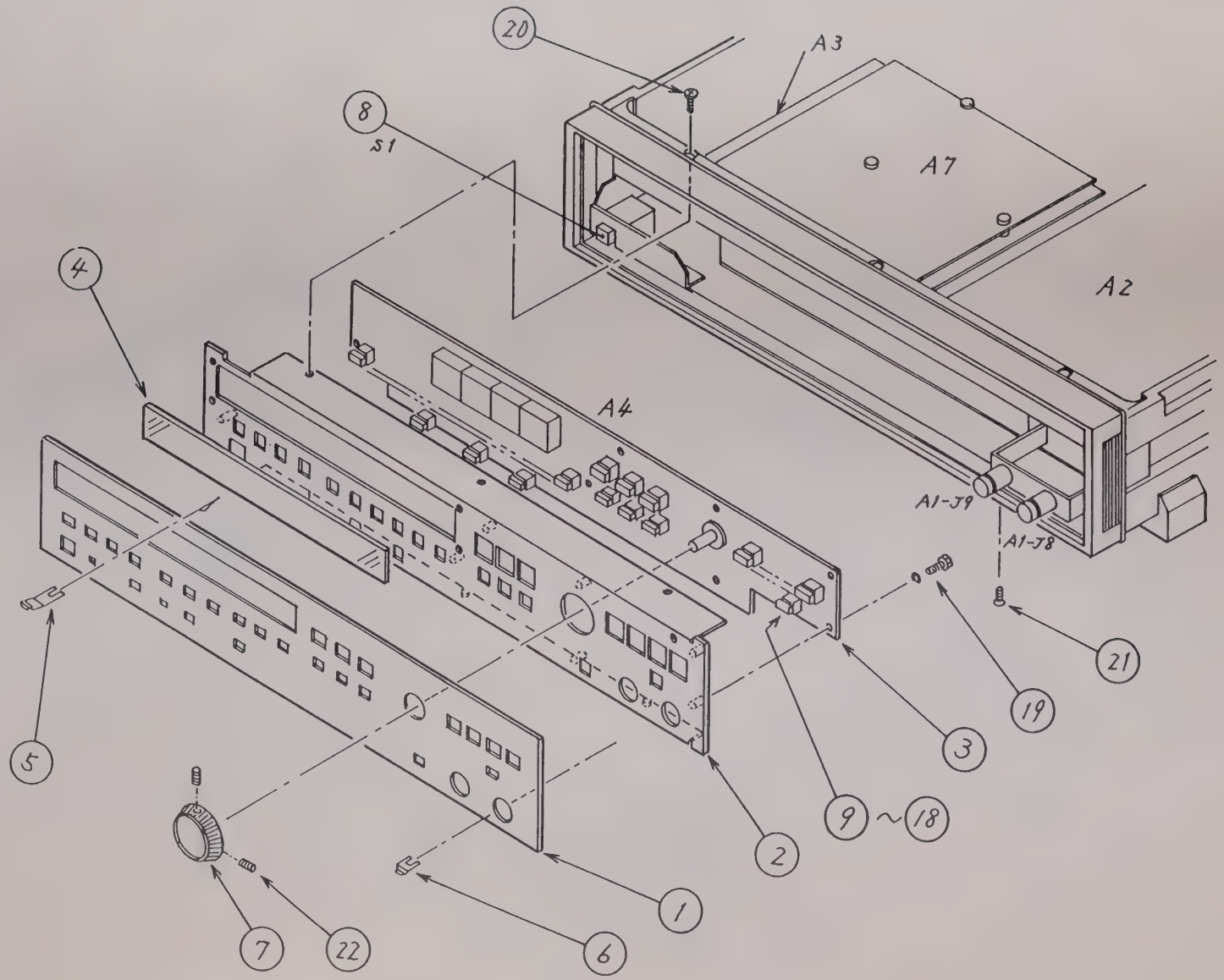

Fig. 2-1 ME4510B Transmitter Front Panel

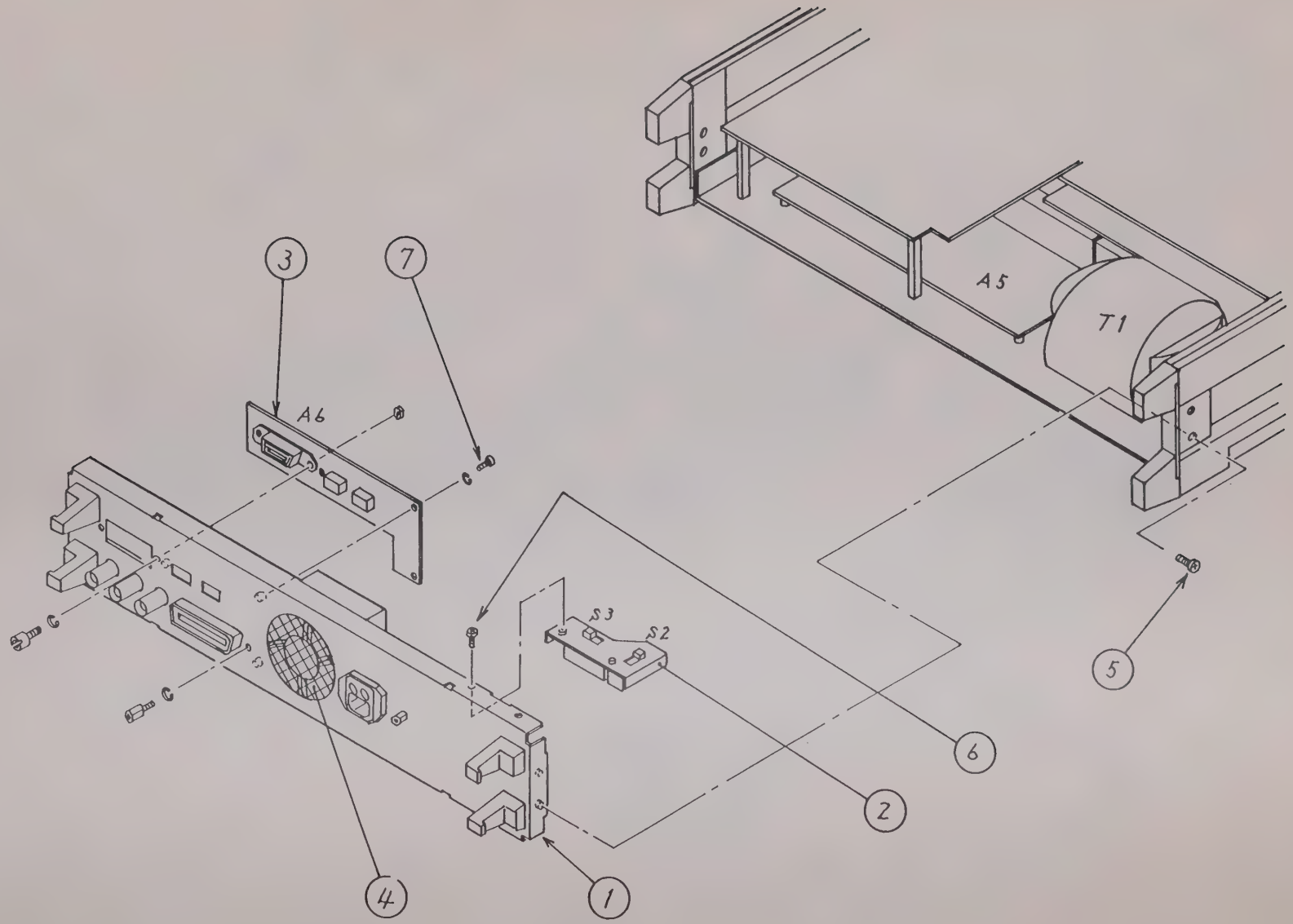

Fig. 2-2 ME4510B Transmitter Rear Panel

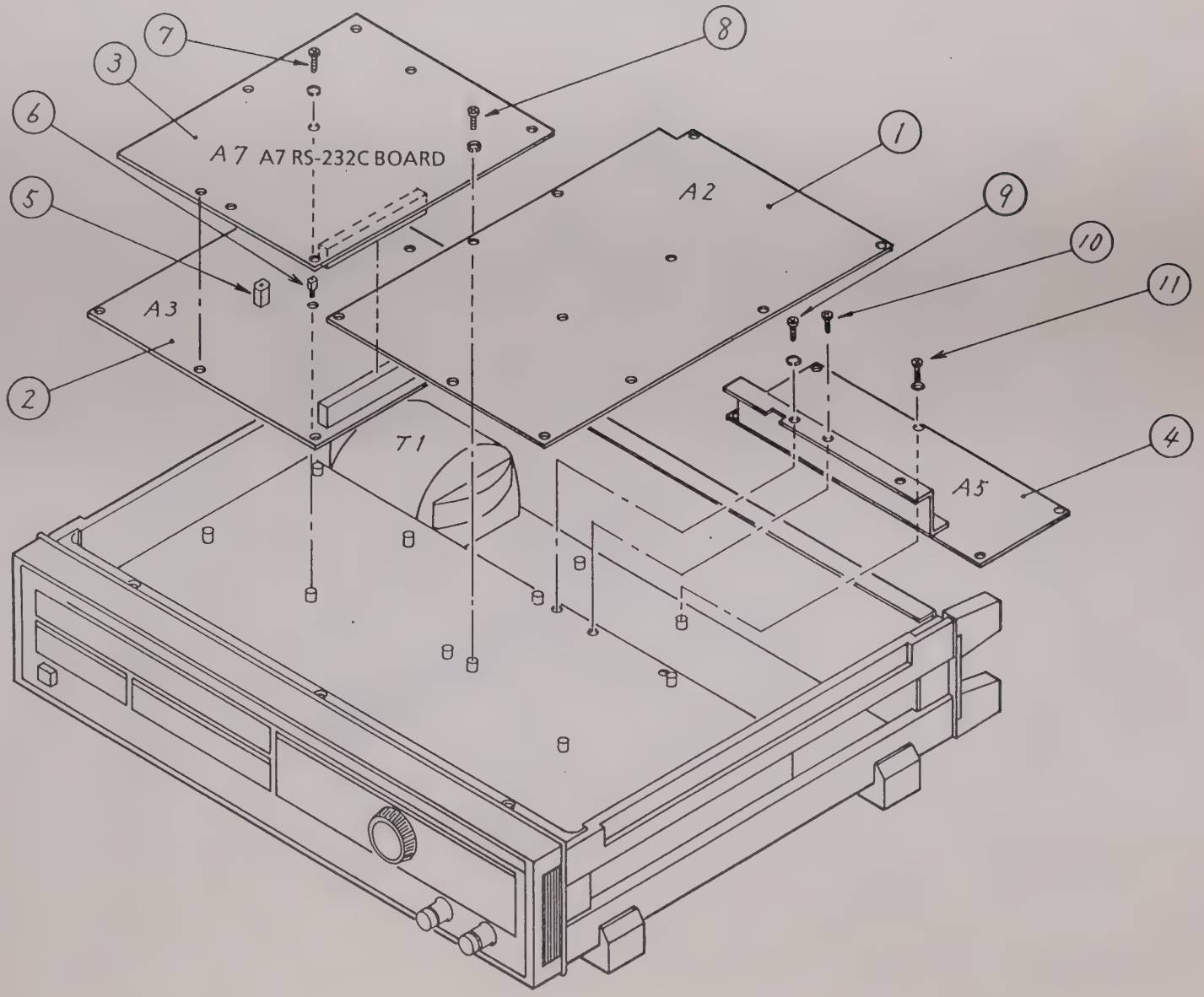

Fig. 2-3 ME4510B Transmitter Top View

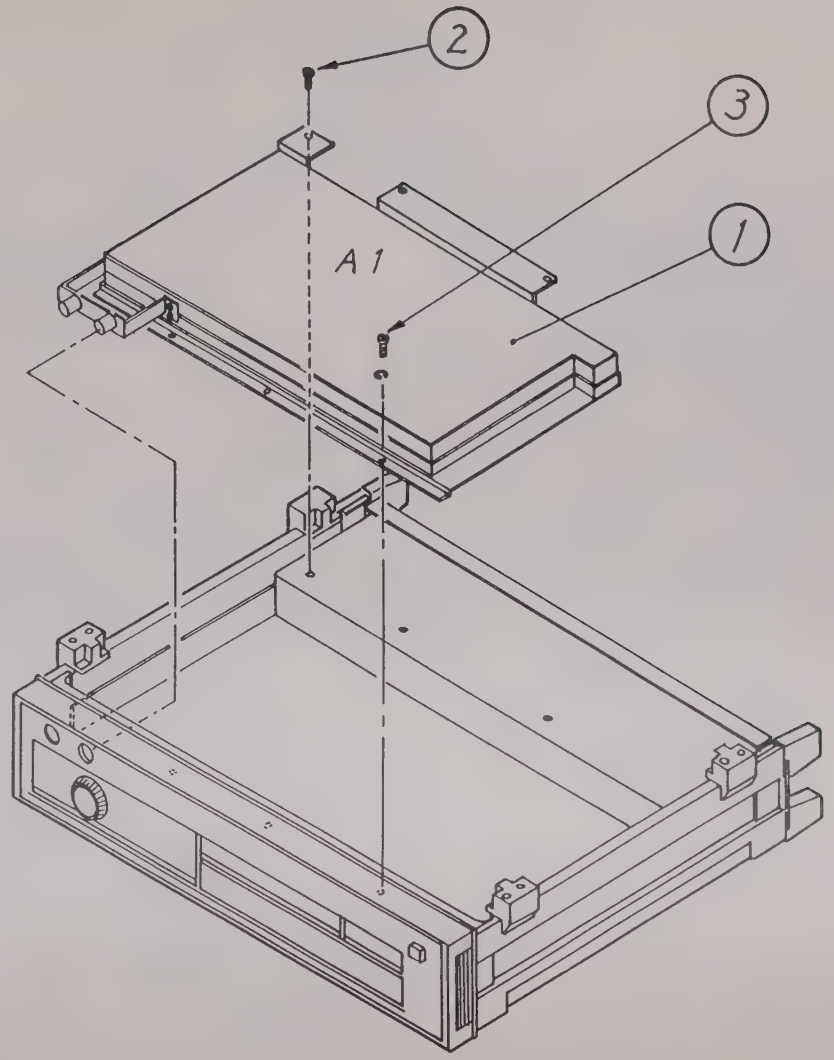

Fig. 2-4 ME4510B Transmitter Bottom View

2.2.2 Mechanical Parts List

ME4510B Transmitter

Table 2-1 Mechanical Parts List (1/4)

	No.	Parts No.	Description	Remarks	Qty.
Fig. 2-1	①	42B13502	Front panel		1
	②	422B13504	Sub Panel		1
	③	44Y86845	A4 FRONT BOARD		1
	④	43H35275	Filter		1
	⑤	34B78330C	Panel Clamp		3
	⑥	34B78330B	Panel Clamp		3
	⑦	342E73700	Knob		1
	⑧	342E93472	Button	: Power	1
	⑨	442E89108C	Button ENTRY ZONE	: ≫	1
	⑩	442E89108D		: ≪	1
	⑪	342E91903	Button	Center freq., ±SWP WIDTH, OUTPUT LEVEL	3
	⑫	342E91903C	Button	RECALL	1
	⑬	342E91903D	Button	SHIFT	1
	⑭	342E91911	Button	FW DEV, AMPL SLOPE, SWP TIME, ENABLE	4
	⑮	342E91911	Button IM3 ZONE		6
	⑯	342E91911B	Button MODE ZONE		4
	⑰	34E91910	Button PRESET, LOCAL		2
	⑱	342E91911	Button PANEL LOCK, IF OUTPUT ON/OFF		2
	⑲	3NPS6B3+SW	Screw		9
	⑳	3FPS8	Screw		3
	㉑	3FPS8	Screw		3
	㉒	3AOS3	Screw		2

Table 2-1 Mechanical Parts List (2/4)

	No.	Parts No.	Description	Remarks	Qty.
Fig. 2-2	①	42B13503	Front panel		1
	②	44B96253	Switch plate		1
	③	44Y86847	A6 GP-IB CONNECTOR		1
	④	W4B4040B	Expanded metal		1
	⑤	4FPS12S7	Screw		4
	⑥	3FPS8B3	Screw		—
	⑦	3NPS6B3+SW	Screw		3

Table 2-1 Mechanical Parts List (3/4)

	No.	Parts No.	Description	Remarks	Qty.
Fig. 2-3	①	44Y86843	A2 IM3 OSC		1
	②	44Y86844	A3 CPU		1
	③	44Y95078	A7 RS-232C		1
	④	44Y86846	A5 POWER SUPPLY		1
	⑤	34H39505	Screw Support 1		3
	⑥	34H39510	Screw Support 2		4
	⑦	3NPS6B3+SW	Screw		7
	⑧	3NPS6B3+SW	Screw		11
	⑨	3NPS8B3+SW	Screw		1
	⑩	3FPS6	Screw		2
	⑪	3NPS6B3+SW	Screw		5

Table 2-1 Mechanical Parts List (2/4)

	No.	Parts No.	Description	Remarks	Qty.
Fig. 2-4	①	44Y86842	A1 IF GENERATOR		1
	②	3FPS8B3	Screw		3
	③	3NPS8B3+SW	Screw		3

2.3 Receiver

2.3.1 Assembly diagrams

Figures 2-5 to 2-8 are are assembly diagrams for the ME4510B Receiver. Table 2-2 comprises a parts list.

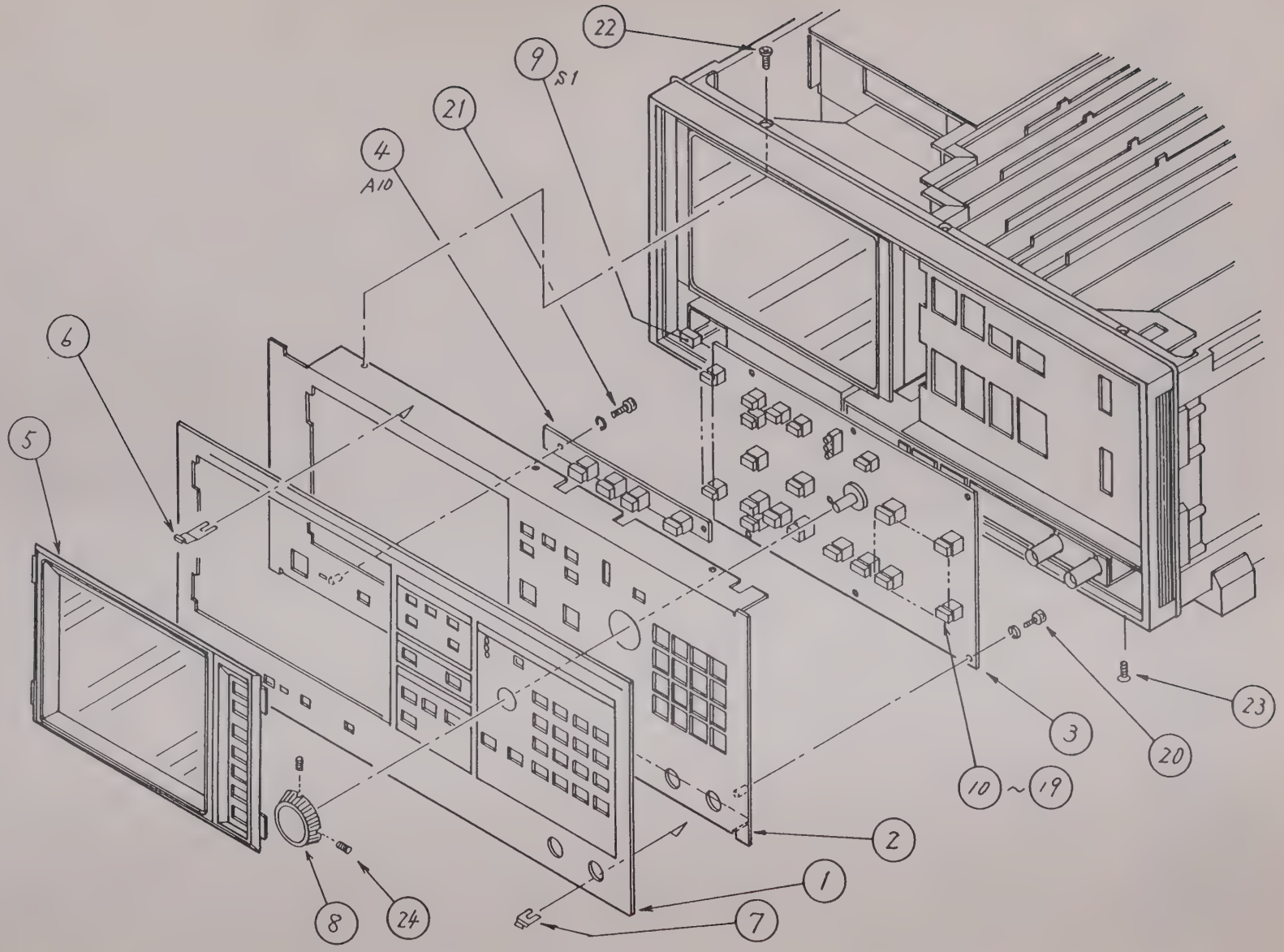

Fig. 2-5 ME4510B Receiver Front Panel

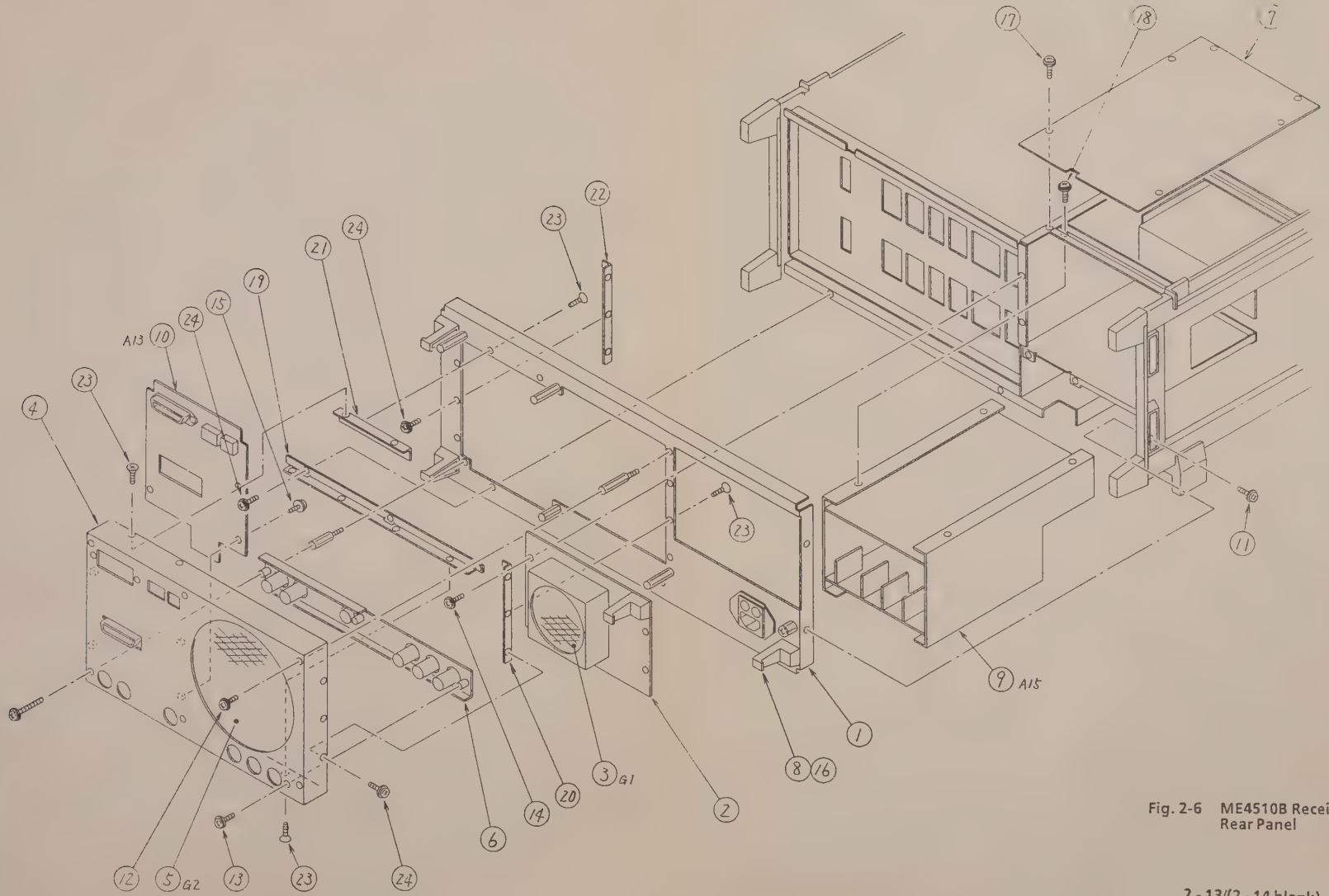

Fig. 2-6 ME4510B Receiver Rear Panel

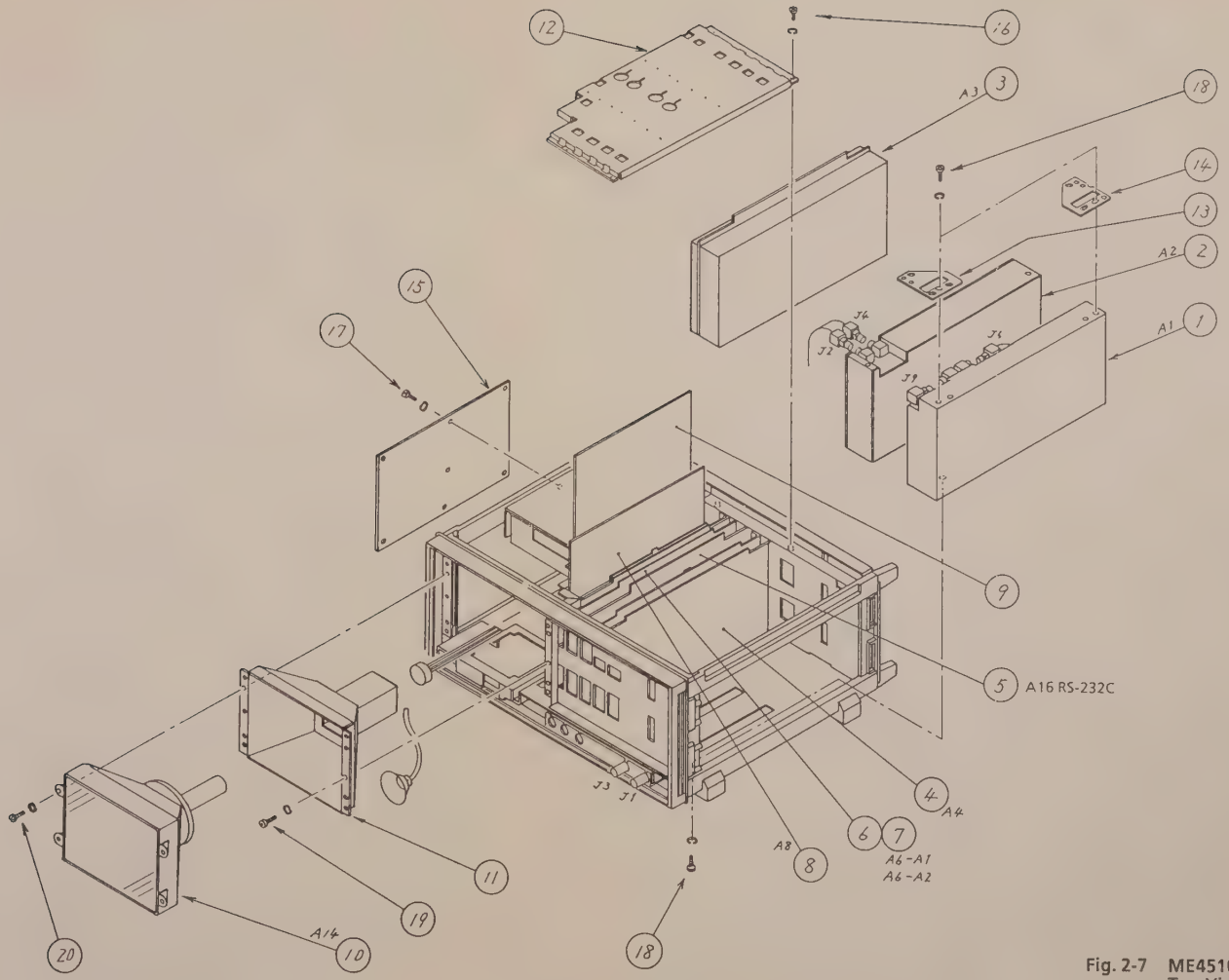

Fig. 2-7 ME4510B Receiver Top View

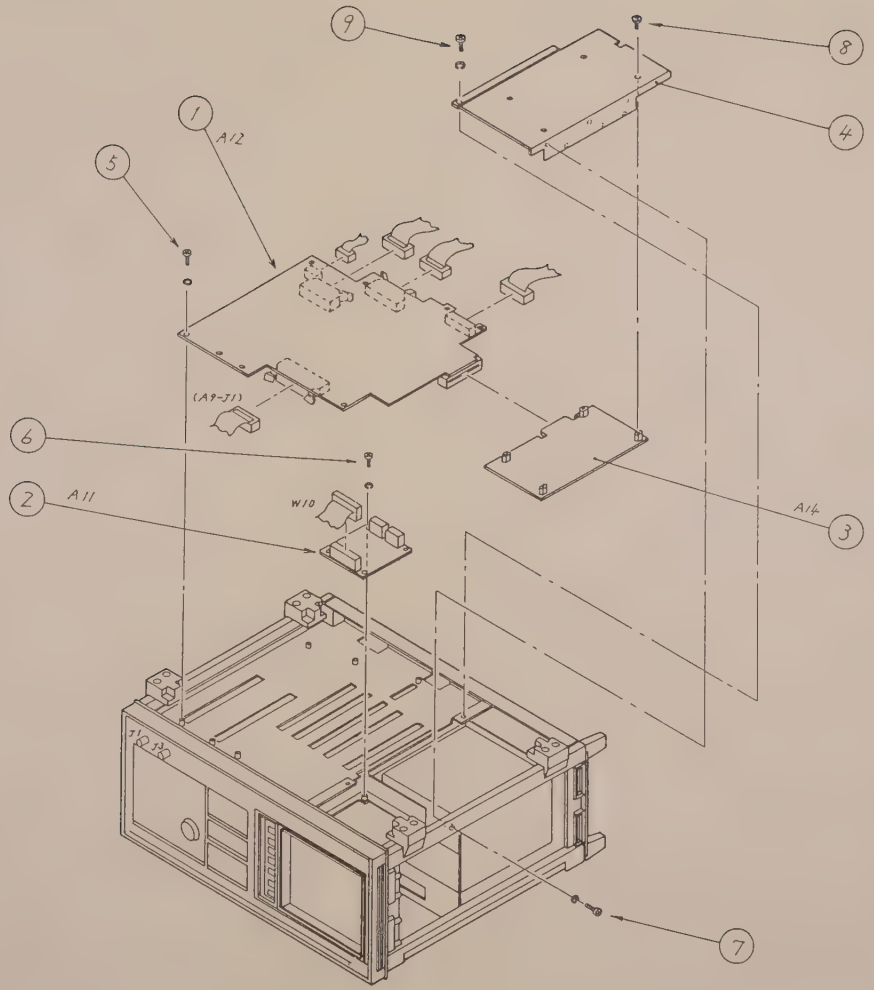

Fig. 2-8 ME4510B Receiver Bottom View

2.3.2 Mechanical Parts List

ME4510B Receiver

Table 2-2 Mechanical Parts List (1/5)

	No.	Parts No.	Description	Remarks	Qty.
Fig. 2-5	①	42B14387	Front Panel		1
	②	422B13649	Sub Panel		1
	③	44Y87168	A9 FRONT BOARD		1
	④	44Y87169	A10 LED BOARD		1
	⑤	432E39924	Bezel		1
	⑥	34B78330C	Panel Clamp		3
	⑦	34B78330B	Panel Clamp		3
	⑧	342E73700	Knob		1
	⑨	342E93472	Button : POWER		1
	⑩	342E37159	Button : ENTRY ZONE 0 to 9, +/−, ·, BS, ∧, ∨		1 set
	⑪	34E91910	Button : ENTRY ZONE OFF		1
	⑫	34E91902B	Button : ENTRY ZONE MHz/s kHz/ms, Hz		3
	⑬	342E91911B	Button : MODE ZONE		4
	⑭	34E91902	Button : MEASUREMENT ZONE		2
	⑮	34E91902	Button : MENUS ZONE		4
	⑯	442E90547	Button : Bezel F1 to F7		1 set
	⑰	342E91911	Button : PANEL LOCK		1
	⑱	34E91910	Button : CONTROL LOCAL		1
	⑲	34E91910	Button : PRESET		1
	⑳	3NPS6B3+SW	Screw		9

Table 2-2 Mechanical Parts List (2/5)

	No.	Parts No.	Description	Remarks	Qty.
Fig. 2-5	㉑	3NPS6B3+SW	Screw		2
(Cont'd)	㉒	3FPS8B3	Screw		3
	㉓	3FPS10B3	Screw		3
	㉔	3AOS3	Screw		2

Table 2-2 Mechanical Parts List (3/5)

	No.	Parts No.	Description	Remarks	Qty.
Fig. 2-6	①	422B13607	Rear Panel		1
	②	432B35481	Cover I		1
	③	W4B4040B	Expanded Metal I		1
	④	432B35486	Cover II		1
	⑤	34B64808	Expanded Metal II		1
	⑥	442B90620	Connector Base		1
	⑦	43B36111	Cover Plate		1
	⑧	34B73670	Cord Holder		4
	⑨	44Z103517	Power Supply Unit		1
	⑩	44Y87172	A13 GP-IB CONNECTOR BOARD		1
	⑪	4NPS12S7+SW	Screw		—
	⑫	3NPS6B3+SW	Screw		—
	⑬	3NPS6B3+SW	Screw		—
	⑭	3NPS6B3+SW	Screw		4
	⑮	3NPS6B3+SW	Screw		4
	⑯	4NPS10S7+SW	Screw		4
	⑰	3NPS6B3+SW	Screw		6
	⑱	3NPS8B3+SW	Screw		4
	⑲	442B103166	Joint Angle Ⅳ		—
	⑳	442B103163	Joint Angle Ⅰ		—
	㉑	442B103165	Joint Angle Ⅲ		—
	㉒	442B103164	Joint Angle Ⅱ		—
	㉓	2.6FPS5B3	Screw		—
	㉔	2.6NPS6B3+SW	Screw		—

Table 2-2 Mechanical Parts List (4/5)

	No.	Parts No.	Description	Remarks	Qty.
Fig. 2-7	①	———	A1 LOCAL		1
	②	———	A2 RF INPUT & IF AMP		1
	③	44Y87162 44Y95163	A3 LOG AMP		1
	④	44Y87163	A4 DELAY & PHASE		1
	⑤	44Y95080	A16 RS-232C		1
	⑥	44Y87165	A6-A1 CPU		1
	⑦	44Y87201	A6-A2 A/D		1
	⑧	44Y87166	A7 HORIZONTAL		4
	⑨	44Y87167	A8 CRT CONTROL		1
	⑩	44Z87248	CRT		1
	⑪	42B13657	CRT Case		1
	⑫	42B13604	Cover Plate		1
	⑬	44B91351	Joint Plate		1
	⑭	44B91351B	Joint Plate		1
	⑮	43B36112	Side Cover Plate		1
	⑯	3NPS8B3+SW	Screw		4
	⑰	3NPS6B3+SW	Screw		7
	⑱	3NPS6B3+SW	Screw		16
	⑲	3NPS5B3+SW	Screw		6
	⑳	4NPS8S7+SW	Screw		4

Table 2-2 Mechanical Parts List (5/5)

	No.	Parts No.	Description	Remarks	Qty.
Fig. 2-8	①	44Y87171	A12 MOTHERBOARD		1
	②	44Y87170	A11 FILTER		1
	③	————	————		—
	④	432B35485	Under Cover		1
	⑤	3NPS6B3+SW	Screw		—
	⑥	3NPS6B3+SW	Screw		4
	⑦	3NPS14B3+SW	Screw		3
	⑧	3FPS5B3	Screw		4
	⑨	3NPS8B3+SW	Screw		2

2.4 CRT Faceplate Cleaning Procedure

Step	Procedure
1	Turn off the power and remove the power cord from the AC outlet.
2	Lift the bezel latch with a fingertip and pull the bezel toward you.
3	Clean the CRT faceplate with a dry cloth.
4	Insert the tip of the bezel into the latch and push the left side of the frame to lock the bezel.

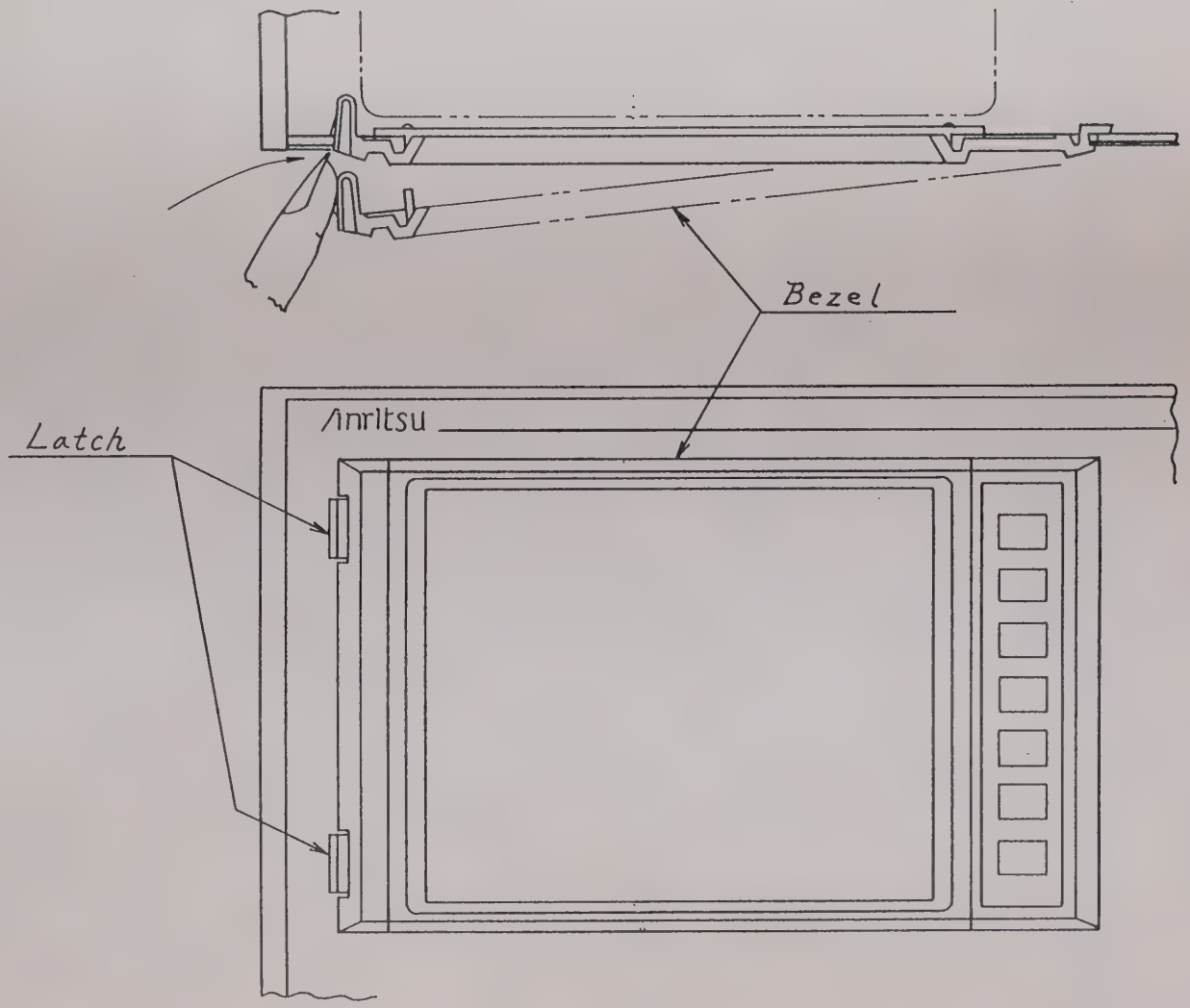

Fig. 2-9 ME4510B Receiver CRT Faceplate

SECTION 3
TROUBLESHOOTING AND REPAIR

3.1 Introduction

This section describes troubleshooting procedures for the ME4510B Transmitter and Receiver, and contains circuit descriptions and circuit diagrams. The parts layout of PC boards and signal waveforms of each part are also shown in the circuit diagrams.

3.2 Service Kit

"Servide kit" is a general term for tools which are used for troubleshooting and repair. A Service kit contains the following items and is sold separately.

Table 3-1 Service Kit (1/2)

No.	Spec. No.	Accessories Name	Qty.	Remarks
1	34J90716 T	27DP-P-LP cable (30 cm)	2	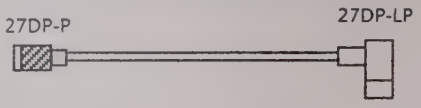
2	34J90713 V	27DP-P-P cable (40 cm)	2	
3	S4W10184 E	SMA-P-P-3U cable (50 cm)	1	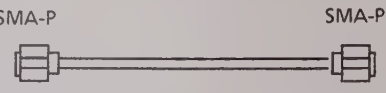
4	No. 1305	SMA-J-J conversion adapter (HRM-501B) (Receiver: A1, A2 boards)	1	
5	34Y99282 A	Extender board 1 (Receiver: A6-A1 board)	1	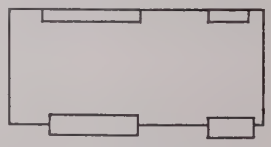
6	34Y99282 B	Extender board 2 (Receiver: A1, A2, A3, A4 A7, A8 boards)	1	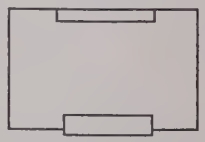
7	43B40951 43B40952	Guide (Receiver: A1, A2 boards)	1	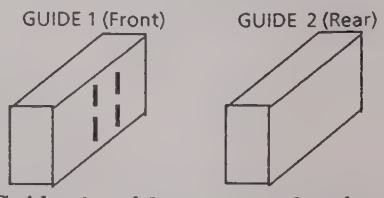 Guides 1 and 2 are screwed to the instrument, and are used to attach an A1 or A2 Receiver board to the extender board.

Table 3-1 Service Kit (2/2)

No.	Spec. No.	Accessories Name	Qty.	Remarks
8	34W99422	Extender Cable (Rx. A6-A1 to A6-A2 board)	1	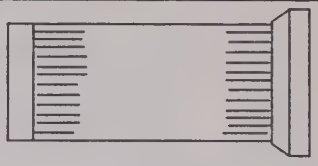
9	44J86863 G	BNC (J)-27CP (LP) cable (55 cm) (Tx: A1, A2)	1	
10	449J95920K	BNC (J)-27DP (P) cable (50 cm)	1	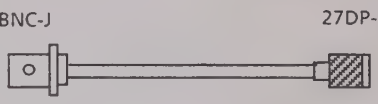
11	439J39880 439J39881	BNC (J)-KC (P) semirigid cable Rx: A2 board	2	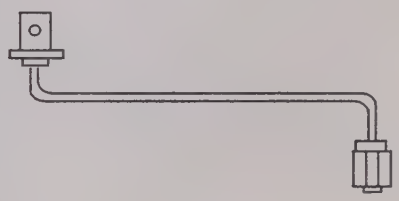

3.3 A List of Equipment Required for Troubleshooting and Repair

Table 3-2 is a list of equipment required for troubleshooting and repair of the ME4510B.

Table 3-2 Equipment Required for Troubleshooting and Repair

No.	Measuring equipment	Recommended model names (Anritsu)	Required performance
1	Frequency counter	MF1601A	10k to 300MHz
2	Power meter	ML4803A,MA4603A	10M to 300MHz, 75Ω
3	Spectrum analyzer	MS2601J	10k to 300MHz, 75Ω
4	Signal generator	MG3601A	100k to 300MHz
5	Sweep signal generator	ME4510B Transmitter	45M to 200MHz, 75Ω
6	Power splitter/combiner		45M to 200MHz, 75Ω
7	50Ω↔75Ω impedance converter	MP614A	10M to 200MHz
8	Oscilloscope		DC to 200 MHz

3.4 Circuit Reference

Table 3-3 ME4510B Transmitter Circuit Reference

No.	Names	A No.	PC Board No.	Circuit Diagram No.	Parts List No.
1	ME4510B TRANSMITTER OVERALL	——	——	43W35208	44W86732
2	IF GENERATOR	A1	422U13568	43W35209	44W86733
3	SLOPE ADJ	A1-A2	332U32393	33W31881	34W98026
4	IM3 OSC	A2	422U13570	43W35210	44W86734
5	CPU	A3	422U13572	43W35211	44W86735
6	FRONT BOARD	A4	422U13574	43W35212	44W86736
7	POWER SUPPLY	A5	432U35469	43W35213	44W86737
8	GP-IB CONNECTOR BOARD	A6	432U35471	43W35214	44W86738
9	RS-232C BOARD (OPTION 01)	A7	422U15340	43W39899	44W95079

Table 3-4 ME4510B-Receiver Circuit Reference (1/2)

No.	Names	A No.	PC Board No.	Circuit Diagram No.	Parts List No.
11	ME4510B RECEIVER OVERALL	—	—	43W35215	44W86740
12	LOCAL OVERALL	A1	—	43W39920	44W86741
13	VCO-1	A1-A1	422U13576	43W35216	44W87141
	LOCAL AMP	A1-A2	422U13576	43W35216	44W87142
	AFC-1	A1-A3	422U13576	43W35216	44W87143
	VCO-2	A1-A4	422U13576	43W35216	44W87144
	2 MHz STEP PLL AMP	A1-A5	422U13576	43W35216	44W87145
	—	—	—	—	—
	VCO-3	A1-A7	422U13576	43W35216	44W87147
	AFC-3	A1-A8	422U13576	43W35216	44W87148
	CONTROL	A1-A9	422U13578	43W35216	44W87149
14	RF INPUT & IF OVERALL	A2	—	43W39921	44W86742
15	MAIN CONVERTER	A2-A1	422U13580	43W35217	44W87150
	AUX CONVERTER	A2-A2	422U13580	43W35217	44W87151
	—	—	—	—	—
	1st LOCAL AMP	A2-A4	422U13580	43W35217	44W87153
	BPF	A2-A5	422U13580	43W35217	44W87154
	IF AMP	A2-A6	422U13580	43W35217	44W87155
	2nd LOCAL AMP	A2-A7	422U13580	43W35217	44W87156
	3rd CONVERTER	A2-A8	422U13582	43W35217	44W87157

Table 3-4 ME4510B-Receiver Circuit Reference (2/2)

No.	Names	A No.	PC Board No.	Circuit Diagram No.	Parts List No.
16	IF BPF & LOG	A3	422U13584	43W35218	44W86743
17	LOG AMP-2	A3-A2	442U90833	43W39917	44W95147
18	DELAY & PHASE DETECTOR	A4	422U13586	43W35219	44W86744
19	CPU	A6-A1	422U13590	43W35221	44W86746
20	A/D CONVERTER	A6-A2	422U13592	43W40046	44W87200
21	HORIZONTAL	A7	422U13594	43W35222	44W86747
22	CRT CONTROL	A8	422U13596	43W35223	44W86748
23	FRONT BOARD	A9	422U13598-A	43W35224	44W86749
24	LED BOARD	A10	422U13598-B	43W35225	44W86750
25	FILTER	A11	422U89797	43W35226	44W86751
26	MOTHERBOARD	A12	422U13600	43W35227	44W86752
27	GP-IB CONNECTOR BOARD	A13	432U35477	43W35228	44W86753
28	RS-232C BOARD	A16	422U15342	43W39900	44W95081

3.5 Troubleshooting and Repair

This paragraph describes overall troubleshooting procedures for the Transmitter and Receiver. First, identify the defective PC board according to the troubleshooting procedures described in this paragraph. Next, proceed with the repair; refer as necessary to the circuit descriptions given in paragraphs 3.6 and 3.7 and to the circuit diagrams, PC board parts layout diagrams and signal waveforms of each part shown in paragraph 3.8.

3.5.1 Troubleshooting the Transmitter

① Power OFF. (The power ON LED should be OFF.)

- Check the fuse (on the rear panel) for the primary AC power.
- Check the A5 power supply board.

② LED display on the front panel is abnormal.

- Check the A4 front board.
- Check the A3 CPU board.

③ A panel key is inoperable.

Case 1 → The key is being used incorrectly.

- The PANEL LOCK has been turned ON.

Case 2 → The LED on the top of the key is continuously lit.

- Check the A4 front board.

Case 3 → The LED on the top of the key is never lit.

- Check the A3 CPU board.

④ If IF output signals are not output.

Case 1 → If IF signals are not output in the IM3 and Far-End mode.

- If the IF OUTPUT ON/OFF switch is in the OFF position, turn it ON.
- Check the A1 IF generator (K3 relay to J8 connector).

Case 2 → If IF signals are not output in Far-End mode.

- Check the A1 IF GENERATOR board.

Case 3 → If IF signals are not output in the IM3 mode.

- Check the A2 IM3 board.

Case 4 → If IF signals are not output in TRACK mode.

- Check the A1 IF GENERATOR (K2 relay) from J5 connector (on the rear panel).

⑤ If the IF output signal frequency is abnormal.

Case 1 → If an output frequency is abnormal in the IM3 mode.

- F1 to F4 are all abnormal. → Check the A3 CPU board (10 kHz reference signal).
- Any frequency - F1 to F1 - is abnormal. → Check the A2 IM3 board.

Case 2 → If an output frequency is abnormal in Far-End mode.

- Check the A1 IF GENERATOR board.

⑥ The sweep width is abnormal (in Far-End mode).

- Check the A1 IF GENERATOR board.

⑦ FM deviation is abnormal (in Far-End and TRACK modes).

- Check the A3 CPU board.
- Check the A1 IF GENERATOR board.

⑧ The GP-IB interface is abnormal.

- Check the A6 CONNECTOR board.
- Check the A3 CPU board.

⑨ The RS-232C interface (option 01) is abnormal.

- Check the A7 RS-232C board.
- Check the A6 CONNECTOR board.

3.5.2 Troubleshooting the Receiver

(1) Introduction

Troubleshooting of the ME4510B Receiver consists of the following three tasks. First, troubleshoot the chassis to find the defective PC board, then troubleshoot the PC board in the spectrum mode (track mode) and Far-End mode.

① Troubleshoot the common circuit

- Power supply circuit
- Key and LED display circuit
- CRT display circuit
- CPU circuit
- A/D digitizing circuit

② Troubleshooting in spectrum mode (TRACK mode)

③ Troubleshooting in Far-End mode

If the A14 CRT unit or A15 POWER SUPPLY is defective, replace it.

(2) Troubleshooting the common circuit

① Power OFF. (The POWER ON LED does not light up.)

- Check the fuse (on the rear panel) for primary AC power.
- Check the DC fuses and the output voltage of secondary power to the A11 FILTER board.
- Replace the A15 POWER SUPPLY unit.

② The LED display is abnormal.

Case 1 → The LED is blinking.

- Check the A6-A1 CPU board.

Case 2 → The LED does not light up.

- Check the A9 FRONT board and A10 LED board.

③ The PANEL key is inoperable.

Case 1 → The key is being used incorrectly.

- The PANEL LOCK has been turned ON. → Turn the PANEL LOCK OFF.

Case 2 → The LED on top of the key is continuously lit.

- Check the A9 FRONT board.

Case 3 → The LED on the top of the key is never lit.

- Check the A6-A1 CPU board.
- Check the A9 FRONT board.

④ The CRT display is abnormal.

Case 1 → Nothing is displayed, but COMP OUTPUT is normal.

- Screen intensity has dropped. → Execute preset (Press PRESET key).
- Replace the A14 CRT unit.

Case 2 → COMP OUTPUT is also abnormal.

- Check the A8 CRTC board.

Case 3 → Part of the screen is not displayed.

- Check the A8 CRTC board.

⑤ A measurement trace is abnormal.

Case 1 → The key is being used incorrectly.

- Set the A1 or A2 trace switch to ON.
- Refer to paragraph 5.6.2 of the operation manual.

Case 2 → A/D sampling is abnormal.

- Check the A6-A2 A/D board.
  [How to check the board:]
  - Apply an external signal (DC +1 V) to the Ampl./spectrum signal input (J3) of the A6-A2 A/D board and verify the trace.

⑥ The GP-IB interface is abnormal.

- Check the A13 GP-IB CONNECTOR board.

⑦ The RS-232C interface (option 01) is abnormal.

- Check the A13 GP-IB CONNECTOR board.
- Check the A16 RS-232C board.

(3) Troubleshooting in the spectrum mode

Checking procedure	Remarks
Power ON ↓ Set the ME4510B Receiver. • Spectrum mode • Preset: ON	•Preset on ····· measurement parameters in spectrum mode are set to default values.
↓ Check SCAN signals. • SCAN signal: 6 V ≦ ±0.5 V (SPAN: 30 MHz/div.)	[Connection] • Connect an oscilloscope to J2 connector of the A7 HOR board. [Measurement] • Observe SCAN signals with an oscilloscope. 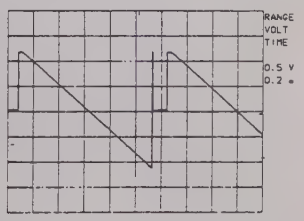
↓ SCAN signals OK? — No →	Check the A7 HOR board.
Yes ↓ ①	

Checking procedure	Remarks
①	
Check LOCAL signals. • Frequency : 521.5 to 821.5 MHz • Level : ≧ +5 dBm	[Connection] • Connect a spectrum analyzer to J3 connector of the A1 LOCAL board. [Measurement] • Local signal frequency = Center frequency + 521.5 MHz. 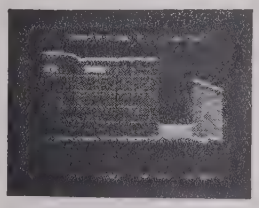
LOCAL signals OK? — No →	Check the A1 LOCAL board.
Yes	
Check a 1.5 MHz IF signal. • Frequency : 1.5 MHz ± 100 kHz • Level : − 18 ± 3 dBm	[Connection and setting] ① Input signal • Connect a signal generator to the IF INPUT connector (on the fornt panel). Frequency : 70 MHz Level : 0 dBm ② Connect a spectrum analyzer to J9 (1.5 MHz output connector) of the A2 RF INPUT board. ③ Set the ME4510B Receiver. • Center frequency : 70 MHz • Span : 0 MHz
②	

Checking procedure	Remarks
②	[Measurement] • Observe 1.5 MHz IF signals with a spectrum analyzer. 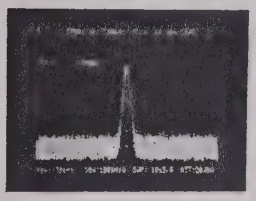 ***Note:*** When retracing scan signals, even if the frequency deviates from the preset value, it is not necessarily abnormal. 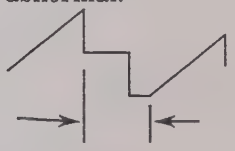
1.5 MHz signals OK? — No →	Check the A2 RF INPUT board.
Yes	
Check LOG/DETECTOR output signal. ① OFFSET level: 0 dBm ② 1.5 MHz input signal specifications • Frequency : 1.5 MHz • Level : – 18 ± 3 dBm	[Connection and setting] ① Input signal Connect a signal generator to J2 connector of the A3 IF BPF board. • Frequency: 1.5 MHz • Level : – 1.8 dBm ② Set the ME4510B Receiver. • Preset : On [Measurement] Adjust the level of the signal generator so that the trace coincides with the top of the CRT screen. 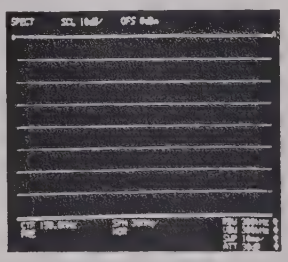
③	

Checking procedure	Remarks
③ OFFSET OK? No → Check the A3 IF BPF board. Yes	
RBW check • RBW : 100 Hz to 300 kHz (1, 3 or 10 setting sequence) • Level : 0 dBm ± 5 dB	[Connection and setting] ① Connect a signal generator to the IF INPUT connector on the front panel. Input a signal with the following characteristics. • Frequency: 150 MHz • Level : 0 dBm ② ME4510B Receiver settings • Preset : On • Span : 10 kHz/div. • VBW : 100 Hz [Measurement] Adjust the level of the signal generator so that the maximum trace value coincides with the top line of the CRT screen. 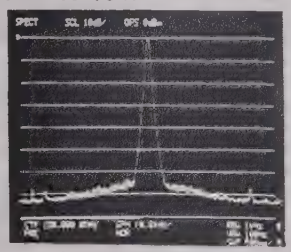 Ex. RBW = 10 kHz Change the setup and measure the RBW in the same way.
PBW OK? No → Check the A3 IF BPF board. Yes ④	

Checking procedure	Remarks
④ ↓ VBW check • VBW : 100 Hz to 300 kHz (1, 3 or 10 setting sequence) • Level : 0 dBm ± 5 dB ↓ VBW OK? — No → Check the A3 IF BPF board. Yes ↓ ⑤	[Connection and setting] ① Connect a signal generator to the IF INPUT connector on the front panel. Input a signal with the following characteristics. • Frequency: 150 MHz • Level : 0 dBm ② ME4510B Receiver settings • Preset : On • Span : 10 kHz/div. • RBW : 10 kHz • VBW : 100 Hz [Measurement] Adjust the output level of the signal generator so that the maximum trace value coincides with the top line of the CRT screen. 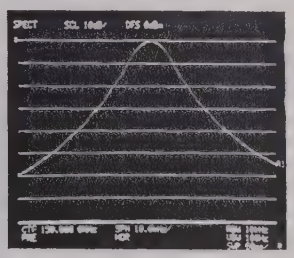 Ex. VBW = 1 00 Hz Change the setup and measure the VBW in the same way.

Checking procedure	Remarks
⑤ ↓ Scale check • Scale : 1, 2, 5 and 10 dB • Level : 0 dBm ± 5 dB	[Connection and setting] ① Connect a signal generator to the IF input connector on the front panel. Input a signal with the following characteristics. • Frequency: 150 MHz • Level : 0 dBm ② ME4510B Receiver settings • Preset : On • Span : 10 kHz/div. • RBW : 10 kHz • VBW : 100 Hz • SCALE : 5 dB/div [Measurement] Adjust the output level of the signal generator so that the maximum trace value coincides with the top line of the CRT screen.
	Ex. SCALE = 5 dB/div 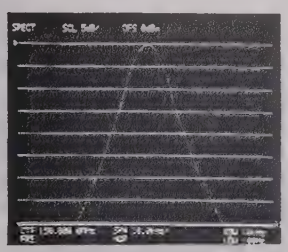
SCALE OK?	Change the setup and measure the SCALE in the same way.
No →	Check the A3 IF BPF board.
Yes ↓ The check result is OK.	

(4) Troubleshooting in the Far-End mode

Checking procedure	Remarks
Power ON	
Set the ME4510B Receiver as follows: • Far-End mode • Preset: On	
Check the search signal. ① 70 MHz band (typical) 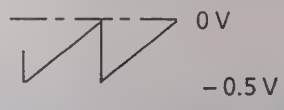 ② 140 MHz band (typical) 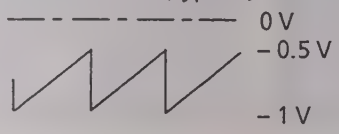 	[Connection and setting] ① Connect an oscilloscope to J1-B11 of the A7 HOR board. ② Set the ME4510B Receiver. • Do not apply any signals to the IF INPUT connector (cut OFF all IF input signals). [Measurement] Measure search signal waveforms with an oscilloscope while the input signals are OFF. 70 MHz band 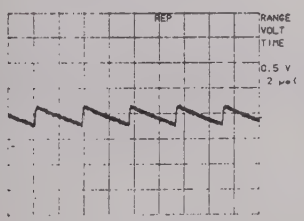 70 MHz band search signal 140 MHz band 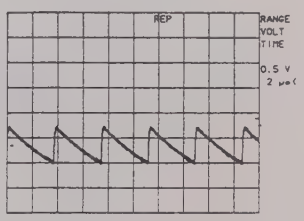 140 MHz band search signal
Search signals OK?	No → Check the A7 HOR board.
Yes ①	

Checking procedure	Remarks
①	
Check LOCAL signals. • 70 MHz band : 45 to 95 MHz • 140 MHz band : 80 to 200 MHz • Level : ≧ + 5 dBm	[Connection and setting] ① Connect a spectrum analyzer to connector J3 on the A1 LOCAL board. ② ME4510B Receiver settings • Do not apply any signals to the IF INPUT connector (cut OFF all IF input signals). • Preset: On [Measurement] Measure local signal waveforms with a spectrum analyzer when the input signal is OFF. 70 MHz band 140 MHz band
LOCAL signals OK?	No → Check the A1 LOCAL board.
Yes	
②	

Checking procedure	Remarks
②	
Check the 41.5 MHz main IF signal. • Frequency : 41.5 ± 0.1 MHz • Level : ≧ – 20 dBm	[Connection and setting] ① Connect a signal generator to J2 connector (the local signal input connector) on the A2 RF INPUT board. • Frequency: 591.5 MHz • Level : +5 dBm ② Set the ME4510B Transmitter/Receiver. Connect the IF output of the Transmitter to the IF INPUT of the Receiver. TRANSMITTER • Frequency : 70 MHz • Sweep width : 0 MHZ • FM frequency : 250 kHz • Frequency deviation: 200 kHz rms • Level : 0 dBm RECEIVER • Preset : On ③ Connect a power meter and frequency counter to J7 (41.5 MHz main output) on the A2 RF INPUT board.
Check the 41.5 MHz Sub-IF signal. • Frequency : 41.5 ± 0.1 MHz • Level : ≧ – 20 dBm	[Measurement] Meassure the level and frequency of the 41.5 MHz main IF output. Next, connect the IF output of the Transmitter to the Sub-IF input of the Receiver, and measure the 41.5 MHz Sub-output at J8 of the A2 RF INPUT board.
Are the 41.5 MHz Main/ Sub IF signals OK?	No → Check the A2 RF INPUT board.
Yes	
③	

Checking procedure	Remarks
③ Check the 1.5 MHz IF signal. • Frequency: 1.5 M ± 0.1 MHz • Level : ≧ – 20 dBm	[Connection and setting] ① Connect a signal generator to J2 (local signal input) on the A2 RF INPUT board. • Frequency: 591.5 MHz • Level : +5 dBm ② Set the ME4510B Transmitter/Receiver. Connect the IF OUTPUT of the Transmitter to the IF INPUT of the Receiver. TRANSMITTER 70 MHz, 0 dBm • Mode : IM3-CW • Preset : On • IF OUTPUT ON/OFF : On RECEIVER • Preset : On ③ Measure the power level and frequency of the 1.5 MHz IF signal at output J9 of the A2 RF INPUT board with a power meter and frequency counter. [Measurement] Meassure the level and frequency of the 1.5 MHz IF output signal.
Is the 1.5 MHz IF signal OK? — No →	Check the A2 RF INPUT board.
Yes ④	

Checking procedure	Remarks
④ ↓ Check the DELAY detecting circuit. • Dispalys delay characteristics on the CRT.	[Connection and setting] ① Connect a signal generator to J2 (local signal input) of the A2 RF INPUT board. • Frequency: 591.5 MHz • Level : +5 dBm ② Set the ME4510B. Connect the IF output of the Transmitter to the IF input of the Receiver. TRANSMITTER 70 MHz, 0 dBm, FM on • Mode : Far-End • Preset : On • Sweep width : 10 kHz/div. • IF OUTPUT LEVEL : 0 dBm • IF OUTPUT ON/OFF : ON RECEIVER • Mode : Far-End • Preset : On • Trace 1 : Delay [Measurement] Adjust the offset so that the delay characteristics are displayed at the center of the ME4510B Receiver CRT screen. 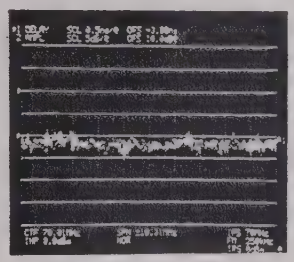
Delay characteristics OK?	No → Check the A4 DELAY board.
Yes ↓ ⑤	

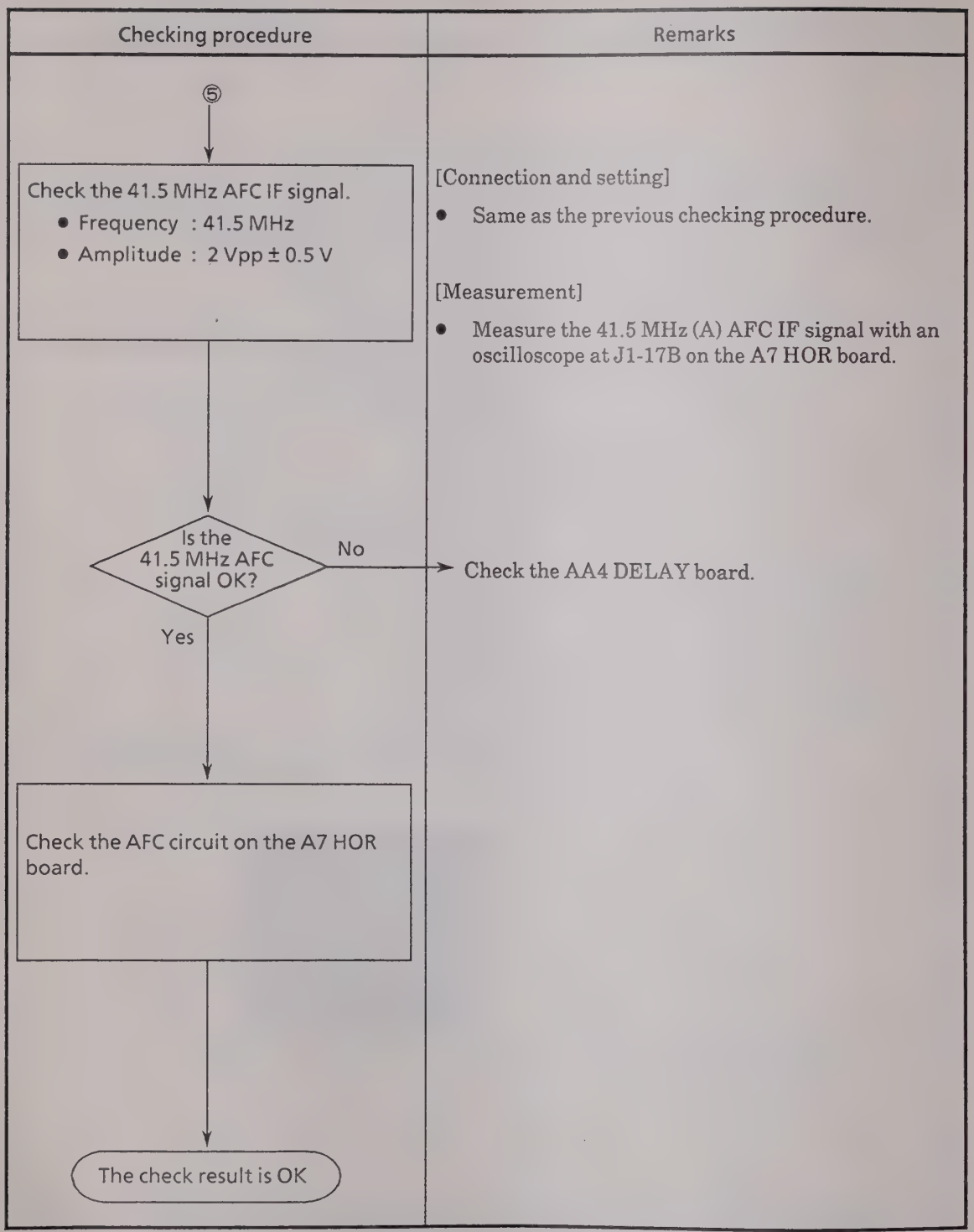
Checking procedure
Remarks
⑤
Check the 41.5 MHz AFC IF signal.
• Frequency : 41.5 MHz
• Amplitude : 2 Vpp ± 0.5 V
[Connection and setting]
• Same as the previous checking procedure.
[Measurement]
• Measure the 41.5 MHz (A) AFC IF signal with an oscilloscope at J1-17B on the A7 HOR board.
Is the 41.5 MHz AFC signal OK?
No
Check the AA4 DELAY board.
Yes
Check the AFC circuit on the A7 HOR board.
The check result is OK

3.6 Circuit Description of the Transmitter

3.6.1 Overall circuit description

A detailed block diagram of the ME4510B Transmitter is shown in Fig. 3-1.

This unit is composed of six PC boards (A1 to A5 and A7). Major functions of these boards are shown in Table 3-5. The A7 RS-232C board is used as option 01 (RS-232C interface).

Table 3-5 ME4510B Transmitter

A No.	Name	Function	Note
A1	IF GENERATOR	This circuit generates the IF sweep signal for delay and amplitude measurements. It consists of a 521.5 MHz FM oscillator, 566.5 to 721.5 MHz sweep oscillator, mixer, IF amplifier, output attenuator, and a sweep signal oscillator.	
A2	IM3	This curcuit generates signals for measuring 3rd-order intermodulation (IM3). It consists of four independent oscillators, with each oscillator controlled by a PLL circuit for stable operation.	
A3	CPU	Using an 8-bit CPU (equivalent to Z-80), this circuit controls the key and display controller, GP-IB, RS-232C, timer, and the I/O of each PC board.	
A4	FRONT BOARD	This circuit consists of keys, LED display, and encoder. It is used to set and display measurement parameters.	
A5	POWER SUPPLY	This is a power supply circuit of the series-regulator type.	
A7	RS-232C	This circuit consists of an 8-bit CPU (evauivalent to Z-80), common RAM for communication, and RS-232C controller.	

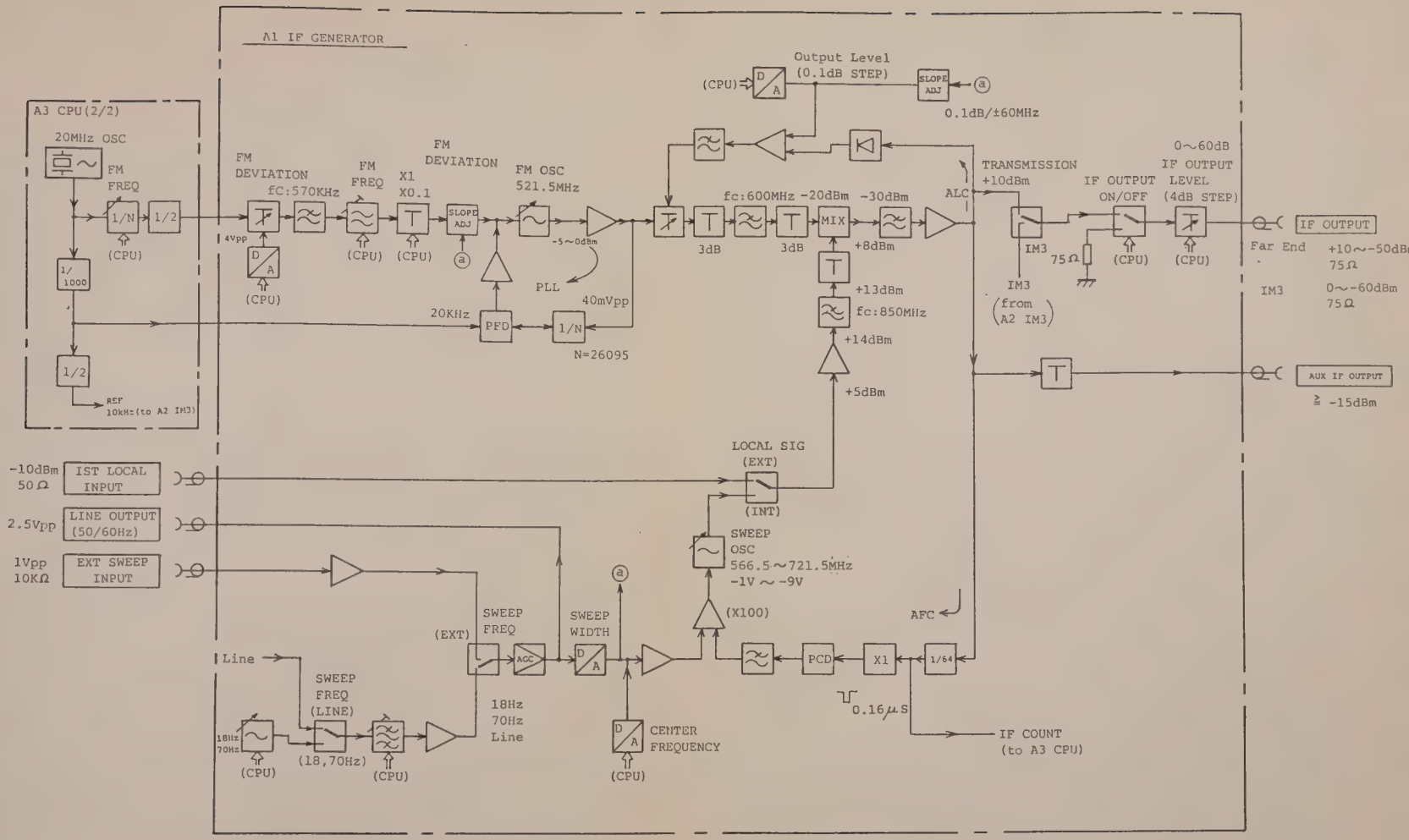

Fig. 3-1 ME4510B Transmitter Detailed Block Diagram (1/3)

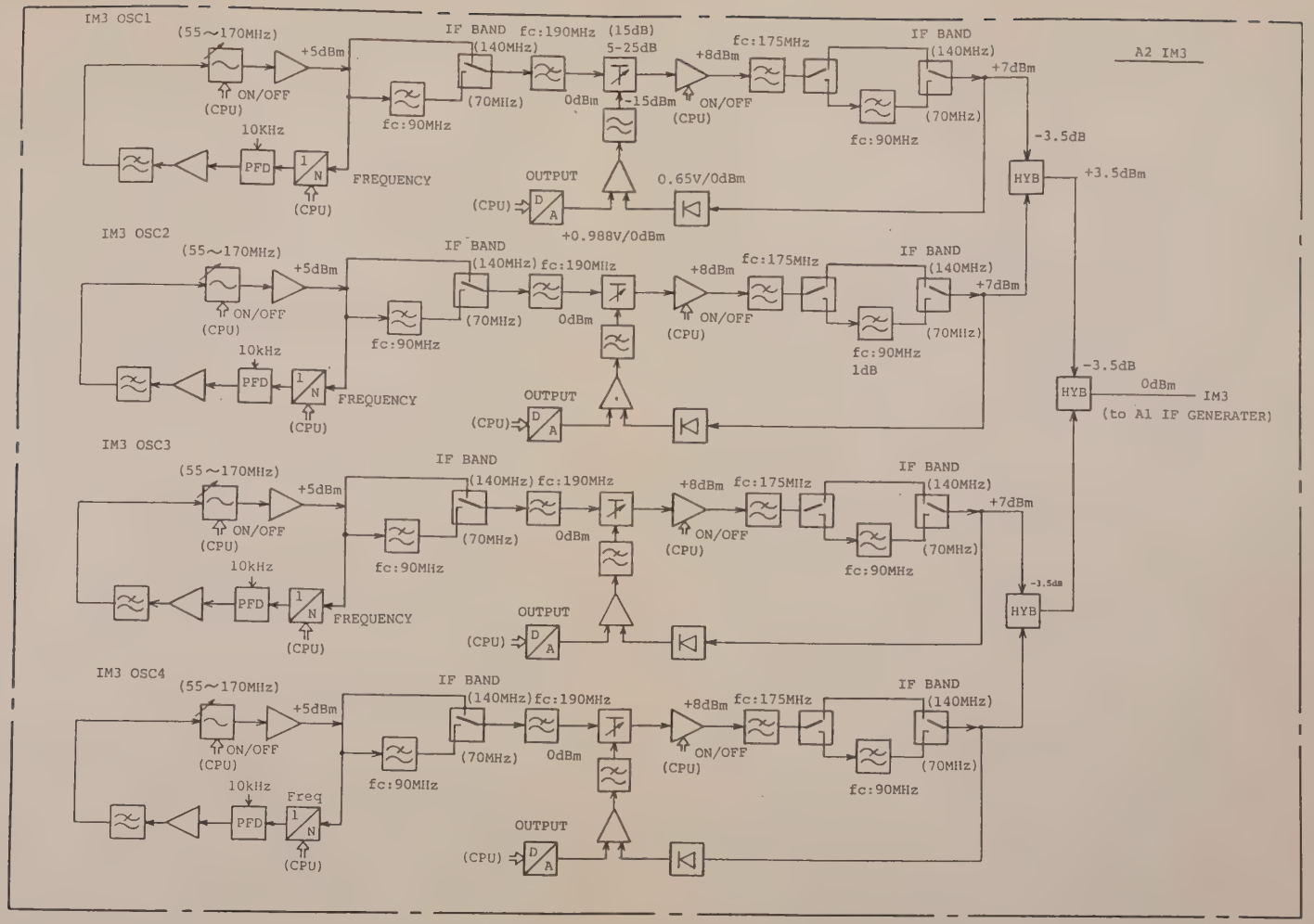

Fig. 3-1 ME4510B Transmitter
Detailed Block Diagram (2/3)

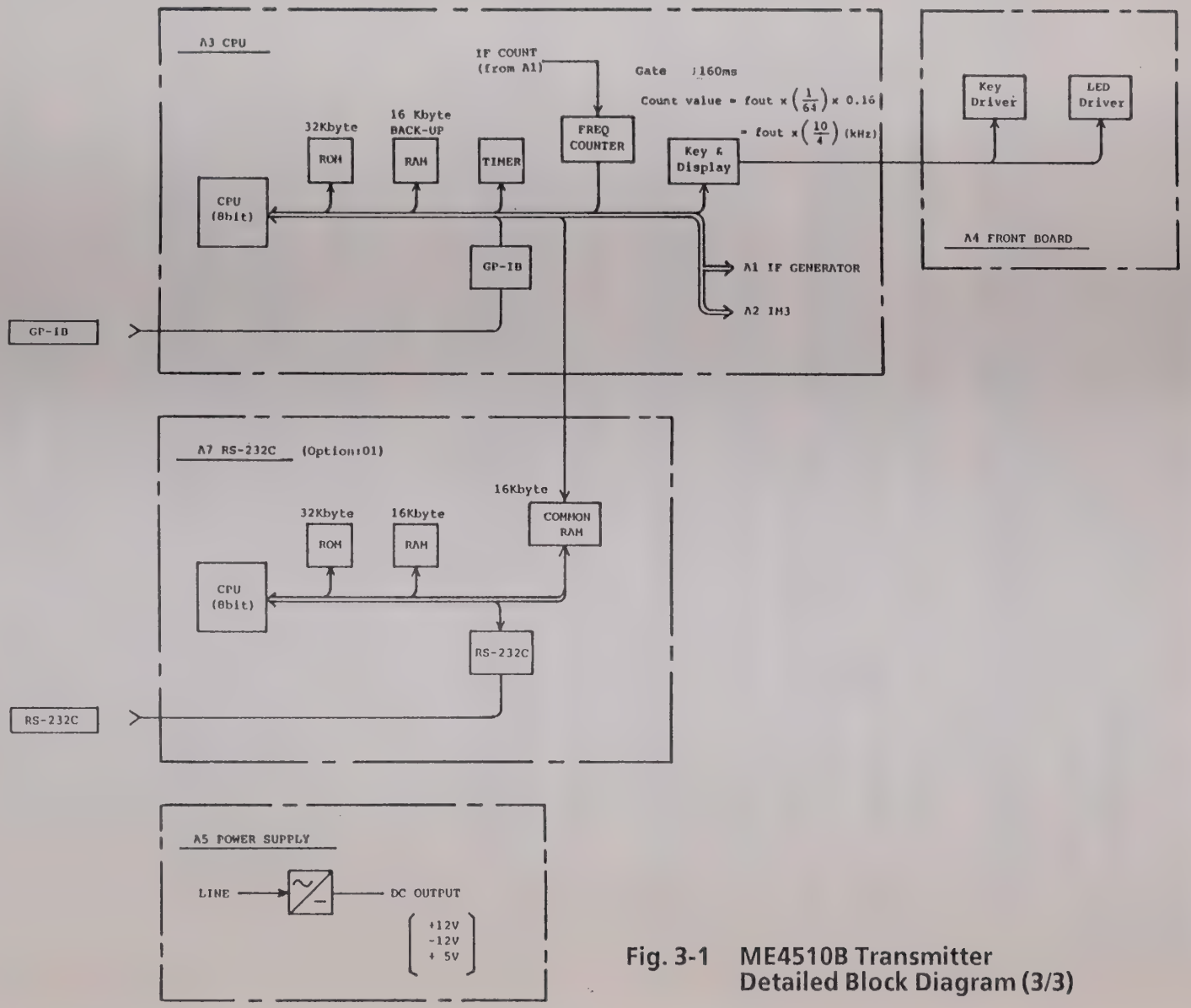

Fig. 3-1 ME4510B Transmitter Detailed Block Diagram (3/3)

3.6.2 Detailed circuit description of each PC board and unit

Refer to the detailed block diagram (Fig. 3-1) and circuit diagram of the ME4510B Transmitter.

(1) A1 IF GENERATOR

① Oscillator section

The oscillator section generates IF band signals from 45 to 200 MHz by mixing (Z2) the output signal from the 521.5 MHz fixed oscillator (FM OSC Q23) by means of an LC resonator and a 566.5 to 721.5 MHz voltage controlled oscillator (sweep oscillator Q52 or Q53) which uses a semicoaxial resonator.

Undesirable signal components are eliminated with a low-pass filter (L24, L25, L26 or L27).

Ⓐ FM oscillator (Q23)

This circuit consists of a VCO and phase-locked loop (PLL). Its output signal is frequency modulated by nine modulation frequencies ranging from 66.7 to 566 kHz and is used to measure group delay characteristics.

The signal produced by coupling L (A1-L16) to R (A1-R41), is sent to the Z2 mixer and output.

The PLL circuit consists of a modulus prescaler (A1-Q25) and a pulse swallowing PLL IC (A1-Q26). The modulus prescaler operates at a scale of 1/64 or 1/65. The reference signal of the PLL IC is 20 kHz.

The higher order harmonics of FM signals (J7) sent from the A3 CPU board are eliminated with a low-pass filter (L1 to L7).

The cutoff frequency of a low-pass filter is determined by the modulation frequency. The FM deviation setting varies with the amplitude of the FM signal. The amplitude is changed by the digital-to-analog converter (A1-Q1) and diode switch (A1-Q13).

Ⓑ SWEEP oscillator

This circuit consists of a VCO and an automatic frequency control circuit.

Frequencies are measured by sweeping a line signal and sweep signal over an 18 to 70 Hz frequency range.

The automatic frequency control circuit consists of a frequency divider (A1-Q81) and a pulse code discriminator. It is used to improve the linearity of the VCO.

The power signal output by the VCO is input to the local side of the double blanced mixer (A1-Z1) after amplification. IF signals of 45 to 200 MHz are output by the mixer. Undesirable IF signal waveforms are eliminated by a low-pass filter with a cutoff frequency of 450 MHz.

The IF signal is split to two signals after amplification; one signal is sent to the output circuit, while the other is sent to the automatic frequency control circuit.

The frequency discriminator of the automatic frequency control circuit consists of a modulus prescaler and a pulse count discriminator. The modulus prescaler (A5-Q81)

divides the frequency of the IF band signal by 1/64, and generates a trigger signal for the pulse count discriminator.

The Pulse Count Discriminator (PCD) circuit generates a 16 μs-wide pulse at each rising edge of this trigger. These pulses are smoothed by passing them through an LPF to generate a DC voltage proportional to the frequency. The control voltage vs frequency linearity characteristics is improved and the frequency is controlled by feeding-back this DC voltage to the 566.5 to 721.5 MHz band VCO.

The sweep signal of the 70 Hz/18 Hz sine wave oscillator circuit of LINE frequency is added to the PCD output, and frequency sweeps the 566.5 to 721.5 MHz band VCO.

② Level control circuit

The IF GENERATOR OUTPUT level is varied from +10 to −50 dBm by a 5 dB-step resistance attenuator and Automatic Level Control Circuit (ALC).

The step attenuator is configured so that the signal is not interrupted at attenuation switching.

The ALC circuit interpolates the 4 dB range and has a setting resolution of 0.1 dB. The level setting information is converted to a DC voltage by a D/A converter.

This voltage is compared to the detected voltage of the IF output signal. The compared differential voltage is input to a PIN modulator to change the attenuation so that the output level becomes the same as the level.

③ A1-A2 SLOPE ADJ and AMPL SLOPE circuit

This circuit is used to correct primary deviations in the amplitude and delay slope when conducting far-end mode measurements. The amplitude is corrected by adding the appropriate correction to the ALC circuit when applying the sweep signal to it. A delay is corrected by advancing or delaying the phase of a frequency-modulated signal with a sweep signal.

④ Others

Ⓐ Digital automatic frequency control circuit

This circuit corrects errors in the preset value after measuring the center frequency in the CW or sweep measurement with a frequency counter. The frequency-demultiplexed signals are counted by the modulus prescaler (A1-Q81) of the automatic frequency control circuit by the frequency counter (gate time: 160 ms) of the A3 CPU board. Afterwards, the correcting value is applied to the digital-analog converter (A1-Q54, Q57) so that errors in the center frequency are reduced to 20 kHz.

Ⓑ AUX IF output

This output signal is used mainly as a reference signal in the TRACK MODE.

In order to synchronize the transmitter section with the receiver section in the TRACK MODE, the frequency of the 1st local signal for the receiver is matched to the frequency of the 1st local signal sent by the sweep oscillator of the transmitter section.

(2) IM3 signal oscillator

A block diagram of the IM3 signal oscillator is shown in Fig. 3-1 (2/3). this unit consists of four synthesized PLL circuits and a combiner which integrates these PLL circuits as one. OSC1 to OSC4 are identical in composition.

① Oscillator section

This section generates signals of 55 to 170 MHz with a synthesized PLL circuit which uses an LC resonator. Higher order harmonics of these signals are attenuated by a low-pass filter. Shielding has been provided for each oscillator so that IM3 spurious radiation is suppressed when conducting measurements.

The synthesized PLL circuit consists of a modulus prescaler (A1-Q15) and pulse-swallow PLL LC (A1-Q16). The modulus prescaler operates scales the frequency by 1/64 or 1/65. The reference frequency and setting resolution of the PLL IC are both 10 kHz.

In the sweep mode, a frequency sweep is made by directly controlling the preset demultiplication ratio of the PLL IC.

② Level control circuit

The output level of the IM3 signal oscillator may be varied from 0 to -60 dB per wave via a 5 dB step resistance attenuator and automatic level control circuit on the A1 IF GENERATOR board. The ALC circuit has a variable width of 10 dB, including level adjustment ($\geqq +2.5$ dB) for each wave, and a setting resolution of 0.1 dB.

The level setting information is converted to a DC voltage by a D/A converter. This voltage is compared to the detected voltage of the output signal.

The compared differential voltage is input to a PIN moculator to change the attenuation so that the output level becomes the same as the level.

③ Combiner

Signals generated by OSC1 to OSC4 are combined with one another by the combiner (A2-Z1).

(3) A3 CPU board

The block diagram for the A3 CPU board is shown in Fig. 3-1 (3/3). The A3 CPU controls the operation of the ME4510B Transmitter and communications (GP-IB) with external equippment. In addition, it generates a reference signal for the A1 IF GENERATOR and A2 IM3 signal oscillator, a modulation signal for frequency modulation (via its 20 MHz crystal oscillator, A3-X1, and a frequency divider) ,and counts frequencies for digital AFCs.

Management of these operations is performed by an 8-bit CPU (equivalent to a Z80, clock signal: 2 MHz, A3-Q1). Major functions of the main ICs are described in the table below.

IC	Q No.	Function
μPD71054 G	Q26	Performs as the system clock Informs CPU the every specified time interval. Conveys the state of rortary encoder on front panel to CPU.
μPD8259	Q27	Controls the traffic between the many peripheral ICs. Conveys the requests from ICs to CP1.
μPD7210 C	Q43	Mediates data between CPU and external equipment through GP-IB, and controls communications.
μPD8279	Q46	Controls front panel LED display and informs CPU the state of front panel keys.

(4) A4 FRONT PANEL board

The block diagram of the A4 FRONT PANEL board is shown in Fig. 3-1 (3/3). The A4 FRONT PANEL board displayes the operating conditions of the ME4510B according to data for the A3 CPU board, and sends keypad information to the A3 CPU board.

(5) A5 POWER SUPPLY

The block diagram for the A5 POWER SUPPLY is shown in Fig. 3-1 (3/3). The A5 POWER SUPPLY converts the line voltage into DC voltages of +5 V, +12 V and −12 V, by means of a rectifier and 3-terminal regulator.

(6) A7 RS-232C (Option 01)

A block diagram of the A7 RS-232C is shown in Fig. 3-1 (3/3). The RS-232C board transfers data between external control devices and the A3 CPU board via a common RAM (A7-Q7).

Management of these operations is performed by an 8-bit CPU (equivalent to a Z80, clock signal: 2 MHz, A7-Q1). Major functions of the main ICs are described in the table on the next page.

IC	Q No.	Function
μPD8259	Q29	Sends an interrput to the CPU when using the RS-232C to communicate.
μPD8251	Q32	IC for interfacing to the RS-232C. This IC converts parallel data to serial and vice versa.
COM8146	Q36	Generates clock signals and switches the baud rate.

3.7 Circuit Description of Receiver

3.7.1 Overall circuit description

A detailed block diagram of the ME4510B Receiver is shown in Fig. 3-2. This unit consists of 14 PC boards (A1 to A13 and A16). Major functions of these PC boards are described in Table 3-6. The A16 RS-232C board is used as option 01 (RS-232C interface).

Table 3-6 ME4510B Receiver (1/3)

A No.	Name	Function	Note
A1	LOCAL	This circuit generates the 1st local signal. (1) When in the FAR-END mode, the oscillation frequency (f_{LO}) track the input signal frequency (fi). f_{LO} = fi + 521.5 MHz (2) When in the SPECTRUM or TRACK mode, the oscillation frequency (f_{LO}) is set by front-panel keys. f_{LO} = fc ± span/2 + 521.5 MHz where, fc = center frequency span = CRT scale frequency range	
A2	RF INPUT	This circuit converts the frequency of the input signal. The IF frequencies are as follows: 1st IF : 521.5 MHz 2nd IF : 41.5 MHz 3rd IF : 1.5 MHz	
A3	IF BPF & LOG DET	This circuit consists of an IF band-pass filter, log amplifier, and detector. When in the SPECTRUM mode, it detects spectrum waveform. When in the FAR-END or TRACK mode, it detects amplitude.	
A4	DELAY DETECTOR	This circuit consists of a 41.5 MHz FM disc and FM signal phase detector. When in the FAR END or TRACK mode, it detects delay characteristics.	

Table 3-6 ME4510B Receiver (2/3)

A No.	Name	Function	Note
A6-A1	CPU	Using a 16-bit CPU (equivalent to 68000), this circuit controls the keys and display, CRT controller, GP-IB, RS-232C (option 01), and the I/O of each PC board.	
A6-A2	A/D	This circuit converts such analog signals as spectrum waveform, amplitude, delay chracteristic, and input level into digital signals.	
A7	HORIZONTAL	This PC board consists of the following circuits: (1) Spectrum scan-signal generating circuit (2) FAR-END mode • AFC circuit to control the 1st local oscillator • Input-signal cente frequency measuring circuit • Input-signal sweep width detecting circuit • Horizontal signal generating circuit	
A8	CRT C	This circuit outputs image data to the CRT. This concists of a CRT controller, video RMA, and video output circuit.	
A9	FRONT BOARD	This circuit is used to set and display measurement parameters.	
A10	LED BOARD	This consists of keys and display controller, and LED display circuit.	

Table 3-6 ME4510B Receiver (3/3)

A No.	Name	Function	Note
A11	FILTER	This is an LC filter used to eliminate noise in the DC power supply.	
A22	MOTHERBOARD	This PC board is used to send signals between PC boards. Each PC board is connected with connector.	
A13	GP-IB CON-NECTOR BOARD	This circuit consists of a GP-IB controller, drivers, connectors, and GP-IB address switches.	
A16	RS-232C	This circuit consists of an 8-bit CPU (equivalent to Z-80), common RAM for communication, and RS-232C controller.	Option 01

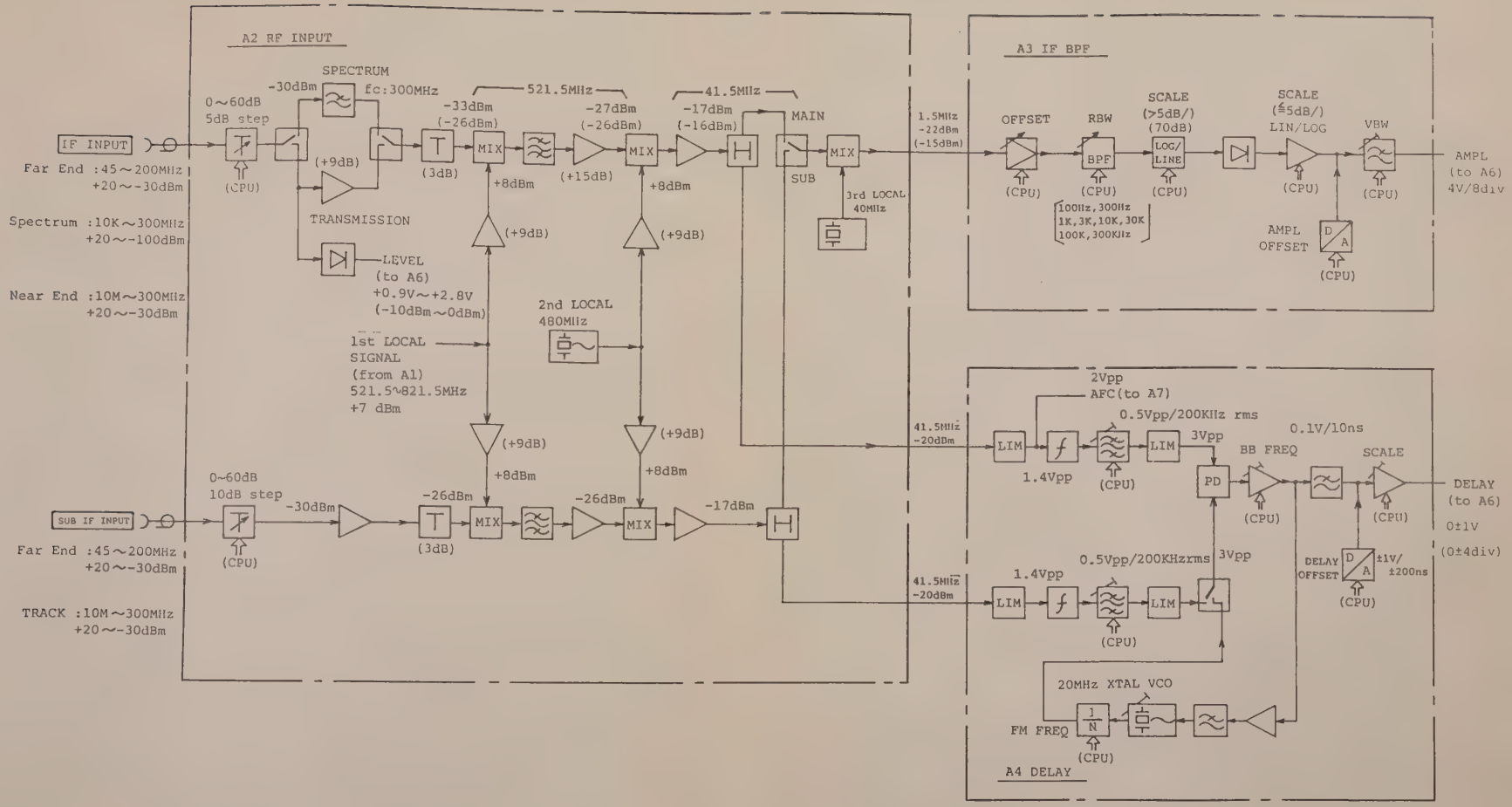

Fig. 3-2 ME4510B Receiver
Detailed Block Diagram (1/4)

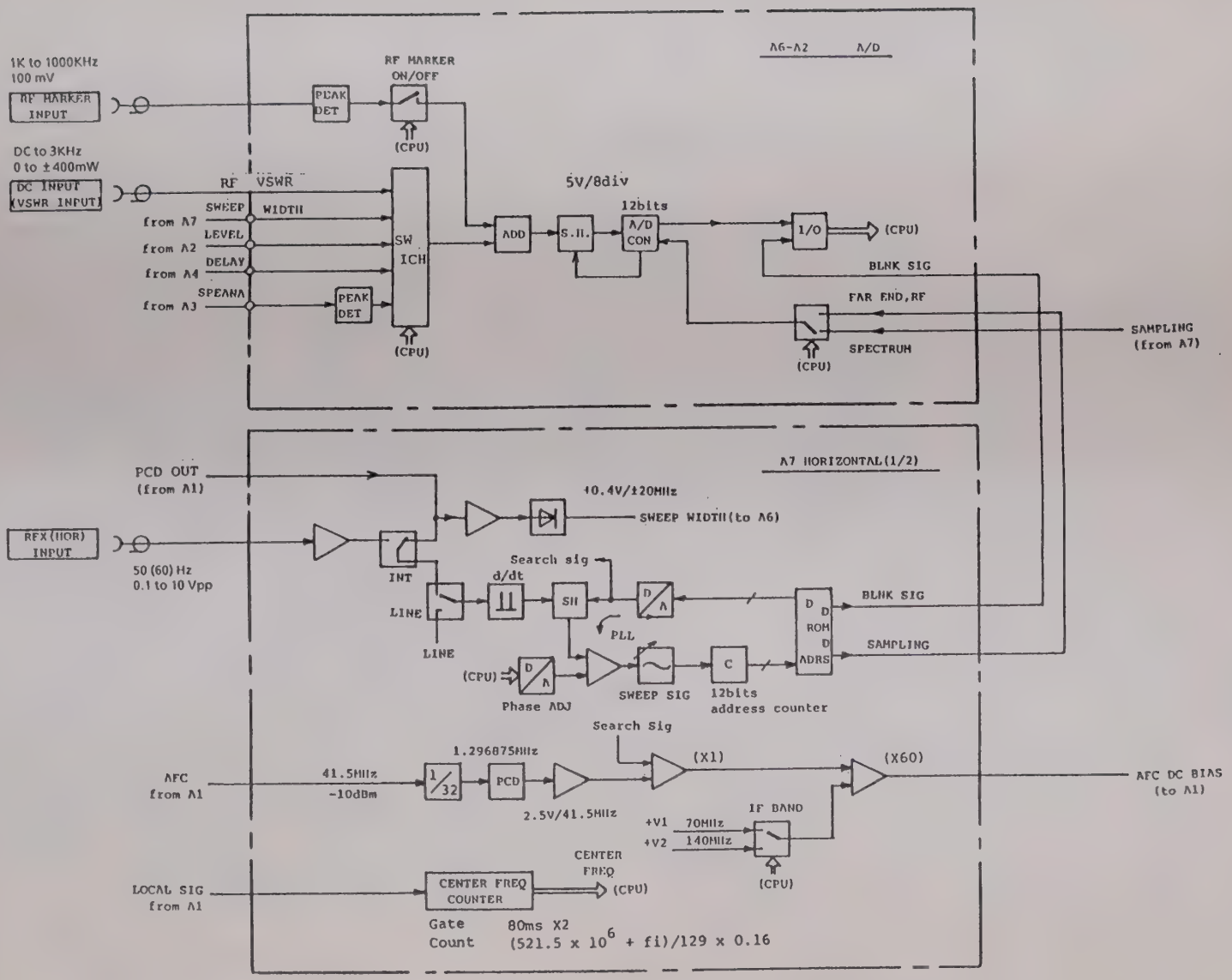

Fig. 3-2 ME4510B Receiver Detailed Block Diagram (2/4)

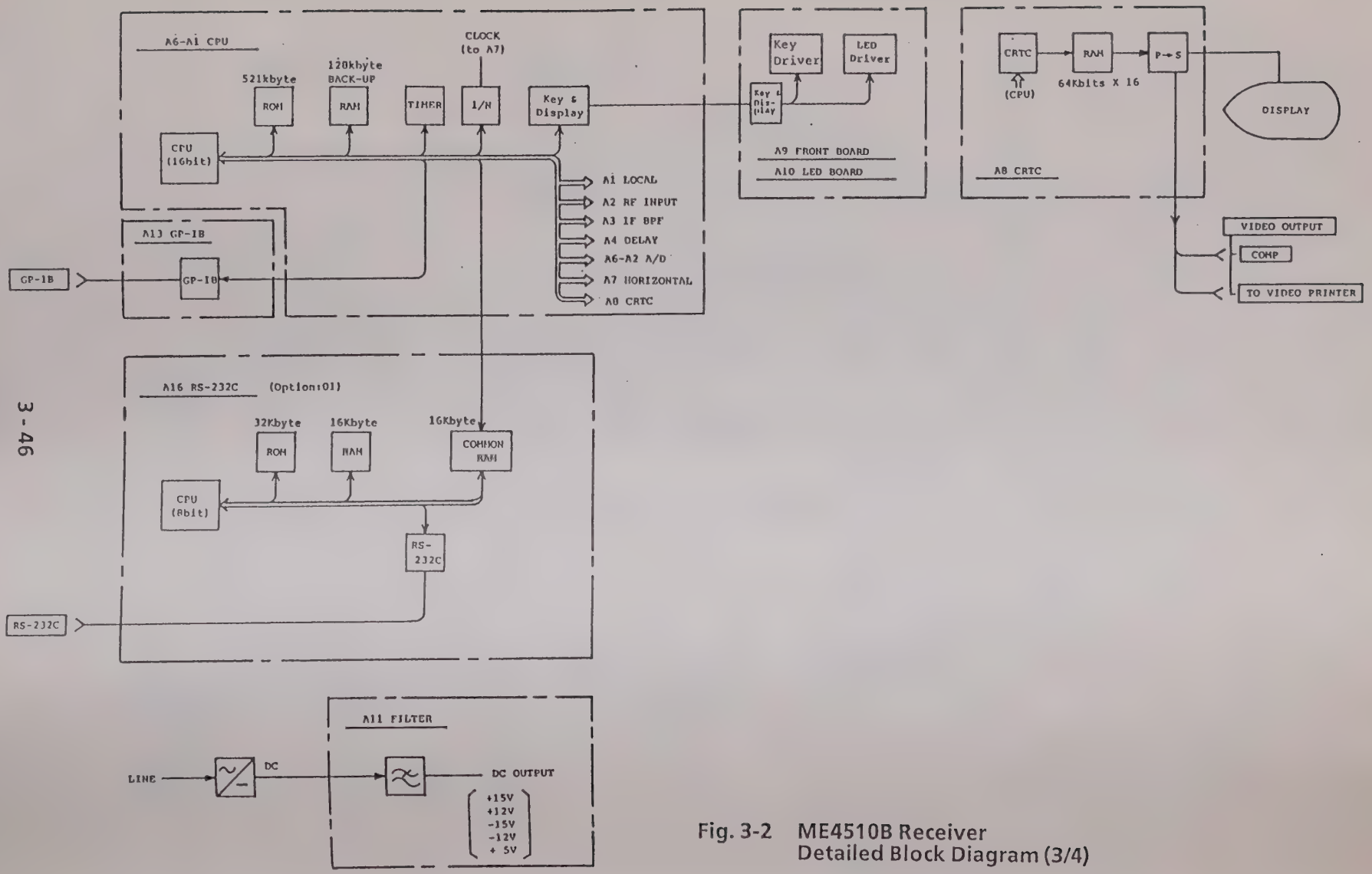

Fig. 3-2 ME4510B Receiver
Detailed Block Diagram (3/4)

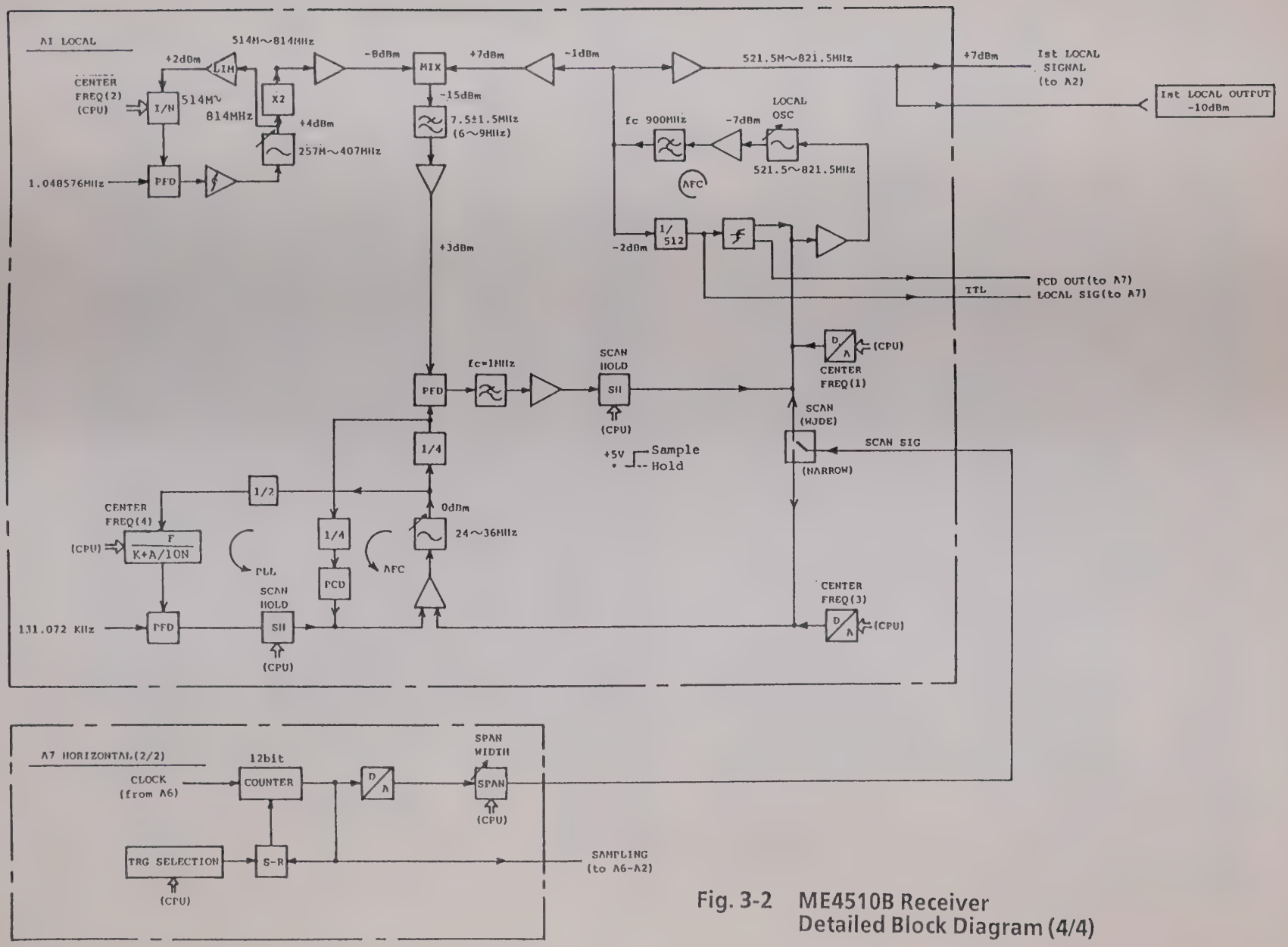

Fig. 3-2 ME4510B Receiver Detailed Block Diagram (4/4)

3.7.2 Detailed circuit description of each PC board and unit

Refer to the detailed block diagram (Fig. 3-2) and circuit diagram for the ME4510B Receiver.

(1) A1 LOCAL

- The A1 LOCAL section generates primary local signals of 521.5 to 821.5 MHz.

  (A) Far-End mode operation

  - Since the A1 LOCAL section operates as a tracking-type heterodyne receiver in the Far-End mode, the oscillation frequency of the 1st local signal is synchronized with the frequency of the IF signal input via the automatic frequency control (AFC) loop.
  - When the 1st local signal is synchronized with the IF signal input to the A2 RF INPUT section, its frequency is converted to a secondary intermediate frequency (IF) of 41.5 MHz. The frequency difference between the IF input signal and the 1st local signal is converted into a DC voltage by a frequency discriminator in the A7 HORIZONTAL section whose center frequency is 41.5 MHz. This DC voltage is then fed back into the A1 LOCAL section, thereby completing an AFC loop.
  - In the Far-End mode, the oscillation frequency (f_{LO}) of the primary local signal is determined by the frequency of the IF input signal (f_i), as follows:

    $f_{LO} = f_i + 521.5\ MHz$

  (B) Spectrum mode operation (identical to tracking mode)

  - In the spectrum mode, the A1 LOCAL section operates as a superheterodyne-scanning-type spectrum analyzer. It is, therefore, composed of a main VCO (VCO1) which generates the 1st local signal and two auxiliary VCOs: a 2 MHz step VCO (VCO2) and a 100 Hz step VCO (VCO3).

    (i) MainVCO

    - The main VCO (VCO1) consists of an OSC section which generates primary local signals of 521.5 to 821.5 MHz, an output circuit, an automatic frequency control circuit (AFC), and a PLL circuit.
    - The OSC section generates primary local signals of 521.5 to 821.5 MHz by means of a voltage controlled oscillator (VCO) with a resonator circuit which uses a semirigid cable. Higher order harmonics of the primary local signal are attenuated by a low-pass filber (LPF).
    - The output circuit uses a wide-band amplifier to amplify the primary local signal to the required output level. Part of the primary local signal is branched by the output circuit and supplied to the transmitter section in tracking mode.
    - The AFC circuit improves the linearity of the voltage vs. frequency characteristics for primary local signals of 521.5 to 821.5 MHz.
    - The frequencies of 521.5 to 821.5 MHz signals are decreased to 1/512 by a frequency divider. The pulse count discriminator (PCD) generates a pulse of approx. 0.38 μs at the rising edge of the frequency-demultiplied square wave. This pulse is smoothined by a LPF, and a DC voltage proportional to this

frequency is generated. Linearity is improved by feeding this DC voltage back to the main VCO.

- In the Far-End mode, a part of the output signal of the PCD is sent to the A6-A2 A/D assembly as a sweep span detecting signal.
- In the PLL circuit, 521.5 to 821.5 MHz signal is mixed with the 514 to 814 MHz signal generated by the 2 MHz step VCO (VCO2), and converted to a signal of 7.5 $\pm$1.5 MHz. The phase of this 7.5$\pm$1.5 MHz signal is compared to the 6.5 to 8.5 MHz reference signal generated by the 100 Hz step VCO (VC03). A voltage corresponding to the phase difference between these two signals is output by the phase-frequency detector (PFD) and applied to the main VCO which converts it into a frequency thereby forming a PLL.

(ii) 2 MHz step VCO

- The 2 MHz step VCO (VC02) consists of an OSC section which generates signals of 514 to 814 MHz and a PLL circuit.
- In order to improve the carrier to noise ratio (C/N), the OSC section which is comprised of two oscillators - each composed of an LC resonator and FET, generates 257 to 407 MHz signals in accordance with the CENTER FREQ. The VCO2 generates a signal of 514 to 814 MHz by doubling the frequency of the 257 to 407 MHz signal. This signal is then supplied to the PLL circuit of the main VCO.
- In the PLL circuit, the level of a 257 to 407 MHz signal is amplified to the ECL level by a limiter circuit, and the frequency of the signal is decreased by I/N by means of a pulse swallow frequency divider. The values of N is determined by the CENTER FREQ. The phase of the frequency-demultiplied signal is compared with that of a 1.048576 MHz reference signal generated by the 10 MHz reference crystal oscillator. The signal output by the PFD is then fed back to the oscillator, thereby forming a PLL.
- The 100 Hz step VCO (VC03) consists of an OSC section - which generates 6.5 to 8.5 MHz signals, an AFC circuit, and a PLL circuit.
- The OSC section which consists of an oscillator with a hybrid IC, generates output signals of 24 to 36 MHz. The frequency of this signal is reduced to 1/4 of the original frequency before being supplied to the PLL circuit of the main VCO.
- Since the basic operations of the AFC and PLL are the same as those of the main VCO, their detailed descriptions have been omitted. Only the following supplementary explanations are provided.
- In the AFC, the frequency of the 6.5 to 8.5 MHz is divided by four. The AFC operates on pulses of 0.37 μsec. supplied by the PCD.
- On the other hand, in the PLL, the frequencies of 24 to 36 MHz frequencies are halved and then further reduced to 1/K + A/10N by means of a fractional frequency divider. The values of K, A and N are determined by the CENTER FREQ. The phase of these frequency-reduced signals are then compared against the 131.072 kHz reference signal generated by the 10 MHz reference oscillator and looped back to the OSC section thereby forming a PLL.

(iii) Frequency sweep operation

- The A7 HORIZONTAL assembly generates a sweep signal which is input into the main VCO or 100 Hz step VCO in order to measure the primary local signal. The waveform of the sweep signal and the state of the PLL are shown in Fig. 3-3 below.

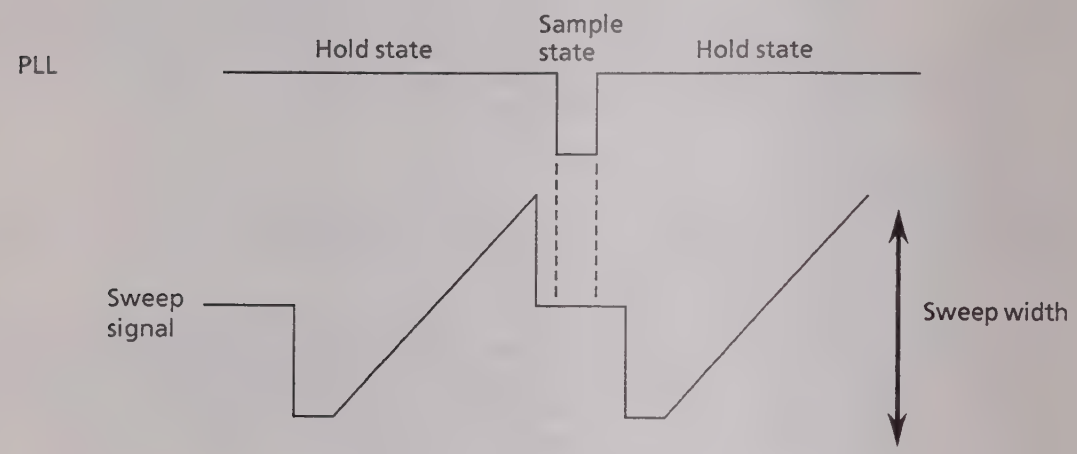

Fig. 3-3 Sweep Signal

- Whether the main VCO or the 100 Hz step VCO is swept is determined by the span setting. The main VCO is swept when the span > 200 kHz, and the 100 Hz step VCO is swept when the span ≦ 200 kHz.
- In the sampling state, the PLL is closed, and the primary local signal is fixed at the center frequency. On the other hand, in the hold state, the main VCO or the 100 Hz step VCO is continuously swept by a sweep signal.

(2) The A2 RF INPUT

- In the A2 RF INPUT, the signal input from the IF INPUT terminal is converted to an intermediate frequency (IF) signal whose transmission characteristics (amplitude, delay, etc.) are then measured. The A2 RF INPUT has two channels so that a signal input via the SUB IF INPUT terminal and converted to an IF signal can be used to measure the transmission characteristics between two routes.
- IF signal conversion is also used, when measuring the spectrum of a signal input via the IF INPUT terminal.
- An input signal is first passed through a stepped attenuator to optimize the input level (main channel: 0 to 60 dB (in 5 dB steps), sub-channel: 0 to 60 dB (in 10 dB steps)).
- The input signal is split and passed through an attenuator. This attenuated signal is sent to the A6-A2 A/D assembly as the detected input signal level, and then fed back to control the attenuator.

- During transmission, the A2 RF INPUT operates as a tracking-type heterodyne receiver, and the primary local signal (supplied from A1) is synchronized with the frequency of the signal input via the AFC loop. In this case, the primary IF frequency is converted to 521.5 MHz.
- The primary IF signal is mixed with the 480 MHz 2nd local signal generated by a crystal oscillator, and converted to the 41.5 MHz assembly IF signal.
- The secondary IF signal is split into the parts' one of which is sent to the A4 DELAY DETECTOR assembly to measure delay characteristics.
- The other part is passed through a two-stage helical band-pass filter with a center frequency of 41.5 MHz to eliminate undesirable waveforms, and mixed with a tertiary 40 MHz local signal generated by a crystal oscillator, thereby generating a tertiary IF signal of 1.5 MHz, which is then supplied to the A3 IF BPF assembly when measuring amplitude characteristics.
- The amplitude and delay characteristics can be measured simultaneously by the process described above.
- Sub-channels are comprised of the same circuits up to the level of the secondary IF signal. Further, the IF signal is supplied to A4 to measure the propagation delay time between two routes. When measuring the amplitude of a sub-channel signal, the sub-channel is temporarily switched to the main channel.
- During spectrum analysis, the A2 RF INPUT operates as a super heterodyne-scanning type spectrum analyzer. In this case, the only input terminal is the IF INPUT terminal; the SUB IF INPUT terminal is not used.
- The input IF signal is limited to an input signal of 300 MHz by a low-pass filter (LPF) after it has been passed through an attenuator and before it is applied to a mixer.
- The signal input to the mixer is mixed with a primary local signal of 521.5 to 821.5 MHz, thereby generating a primary IF signal of 521.5 MHz.
- In order to eliminate undesirable waveforms, the primary IF signal is passed through a 5-stage helical band-pass filter, and converted to a secondary IF signal.
- This secondary IF signal is further converted to a tertiary IF signal via a high-pass filter (6-stage type, fc = 40 MHz) which eliminates image signals. This tertiary IF signal is then supplied to the A3 IF BPP assembly.

(3) A3 IF BPF

- The A3 IF BPF consists of eight sequential band-pass filters each of which has a center frequency of 1.5 MHz and all of which together passess a bandwidth (RBW) of 100 Hz to 300 kHz. This BPF is used when measuring spectra.
- To set smaller RBWs of 10 to 300 kHz within the larger RBWs of 100 Hz to 300 kHz, four stages of L/C filters are used. In contrast, when setting a RBW of 100 Hz to 3 kHz, four stages of crystal filters are used instead.
- An amplifier inserted between the filter stages is used to maintain a constant passband insertion loss level for the filter whenever the RBW is changed.

- In the spectum mode, the gain of the gain-switching interstage amplifier is controlled by setting the REF LEVEL. When measuring the amplitude in the Far-End or TRACK mode, the gain is controlled by setting the coarse OFFSET from 0 to 40 dB in 10 dB steps and the fine offset from 0 to 10 dB in 1 dB steps.
- The logarithmic amplifier is a linear-to-dB (linear-to-logarithmic) conversion and amplification circuit when consists of seven stages and utilizes the saturation phenomena of balanced transistor amplifiers. This logarithmic amplifier is used to expand the range for analyzing and displaying spectrum waveforms. The dynamic range of this amplifier is 70 dB or more.
- Outputs from the amplitude detector are passed through a logarithmic amplifier, and a video band-pass filter (VBF) which filters frequencies in the 100 Hz to 300 kHz range. This signal is then supplied to the A6-A2 A/D assembly via an amplifier which is controlled by the SCALE setting.
- During amplitude measurements in the Far-End or TRACK mode, the RBW assembly and logarithmic amplifier are by-passed, and the 1.5 MHz input signal is sensed directly by the detector.
- Each stage of the DC logarithmic amplifier has a dynamic range of 40 dB. The entire amplifier serves to expand the amplitude display range of the waveform.
- The voltage of a 16-bit D/A converter, which is controlled via the OFFSET setting, is superimposed upon the amplitude waveform which is supplied to the A6-A2 A/D asseembly via an amplifier which, in turn, is controlled by the SCALE setting.
- The 16-bit D/A (digital/analog converter) has a precise offset resolution of 0.01 dB.

(4) A4 DELAY DETECTOR

- This board is composed of a 41.5 MHz FM discriminator (FM DISC) and an FM signal phase detector circuit for measuring delay characteristics in the Far-End and TRACK mode.
- The amplitude variation of the 41.5 MHz signal supplied by the A2 RF INPUT section is reduced by means of a 4-stage limiter. This signal is then demodulated to an FM signal by the FM DISC circuit whose center frequency is 41.5 MHz.
- The FM signal is then sent to a band-pass filter (BPF) and a phase detector (Q39 to Q44). The phase detector (PD) detects phase shifts in the FM signal. Its output corresponds to the delay characteristic of the device under test.
- The step gain amplifier (Q45 and Q46) sets the gain so that the sensitivity of PD remains constant whenever the FM frequency is changed.
- After the FM signal components in the PD output signal (delay characteristic) are eliminated by a low-pass filter, a DC output voltage from the 16-bit digital/analog converter (D/A) is superimposed upon the signal and the resulting signal is then amplified by a variable-gain amplifier before being sent to the A6-A2 A/D section. The D/A converter and variable-gain amplifier are controlled by the A6-A1 CPU, in accordance with the OFFSET and SCALE settings.
- The reference signal of the phase detector is generated by dividing the frequency of the 20 MHz signal output from the voltage-controlled crystal oscillator (VCXO) by N. The value of N is determined by the measurement parameters of the FM frequency.

- The delay characteristic signal is split and fed back into the 20 MHz VCXO in order to produce a reference signal for the phase detector. This reference signal generator circuit constitutes a phase-locked loop (PLL).
- The limiters and 41.5 MHz FM discriminators for the two channels are composed of the same circuit components so that the delay time difference between the two routes can be accurately measured by a phase detector which compares the phases of the two channels.

(5) A6-A1 CPU

- The CPU is a 16-bit microprocessor compatible with the MC68000. Its clock frequency is set to 8 MHz by halving the frequency of the 16 MHz crystal oscillator.
- The ROM uses four 128-Kbyte EPROM, so that its total working capacity is 512 Kbytes.
- The RAM is backed up by a battery (Z1). Its total capacity is 128 Kbytes.
- The TIMER (Q52) is a real-time clock signal with a frequency of 32.768 kHz. The time is set and read by the time controller circuits (Q51 and Q52). This timer is backed up by a battery (Z2).

(6) A6-A2 A/D

- The following signals are selected by the switching circuit, depending on their measuring status.
  - Spectrum and amplitude signals of the A3 IF BPF section
  - Sweep signal from the A7 HORIZONTAL section
  - Input level signal from the A2 RF INPUT section
  - Delay signal from the A4 DELAY DETECTOR
  - RF VSWR signal
  - RF marker signal

  *1. An input terminal to a device (sold separately) which measures the RF amplitude and delay characteristics.
- The spectrum signal can be displayed in either of two display modes, NORML and MAX HOLD. The spectrum signal is passed through a positive peak detector circuit which detects peak values in the spectrum waveform.
- The selected signal is sampled by a sample/hold (S/H) circuit, and the sampled signal is converted to a digital signal by a 12-bit analog/digital converter (Q36).
- The sampling time is controlled by a sampling signal from the A7 HORIZONTAL section.
- The RF marker signal is passed through the positive peak detector circuit in a manner similar to that of the spectrum signal, and superimposed upon the selected signal.

(7) A7 HORIZONTAL

This board consists of the following circuits.

[Spectrum mode]

- Scan signal generator (Q15 to Q28)
- Sweep trigger (Q3, Q4, Q8 to Q10)

[Far-End mode]

- Sweep signal generator (Q31 to Q47)
- AFC loop circuit (Q51 to Q61)
- Sweep width measurement circuit (Q62 to Q65)
- Center frequency measurement circuit (Q92 to Q107)

① Scan signal generator

The scan signal generator generates scan signals for sweeping the frequency of the primary local oscillator in the spectrum mode. An example of scan signals is shown in Fig. 3-4 below:

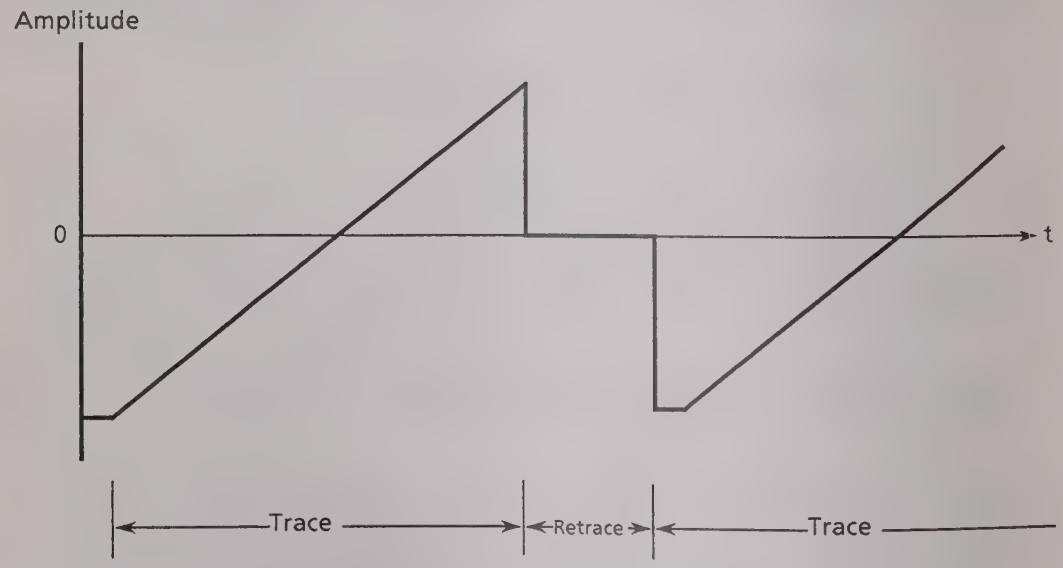

Fig. 3-4 Scan Signal (TP3)

This scan signal is generated by converting the digital signal output from the 12-bit binary counter (Q16 to Q18) to an analog signal via the 12-bit D/A converter (Q19.)

The span width is set by a multiplication-type D/A converter circuit (Q27) and an analog switch (Q29).

The scan signal is sent to the A1 LOCAL board through J2.

② Sweep trigger

The sweep trigger selects the timing for starting scan signal sweeps in the spectrum mode. There are four timing modes for starting sweeps; LINE TRG, VIDEO, EXT and FREE KRUN. They are selected by an analog switch (Q3). The level for the VIDEO and EXT triggers is set by the D/A converter (Q8).

③ Sweep signal generator (Q31 to Q47)

The sweep signal generator generates clock signals which are used by an A/D converter to sample delay and amplitude characteristics. In order to synchronize this clock signal with the sweep signal of an IF input signal, this circuit uses a PLL.

A sweep signal (J1-11A) sent from the A1 LOCAL board is converted to a fixed pulse width signal by a DC amplifier (Q35) and monomultiplexer (Q36). This fixed pulse width signal becomes a reference signal for the phase detector (Q31).

The oscillator frequency of the sweep clock generator (Q34) changes in accordance with the DC voltage applied via the control terminal. This frequency is determined by the sweep frequencies as shown in the table below:

Table 3-7 Oscillator Frequencies of the Sweep Clock Generator

Sweep frequency	Oscillator frequency
LINE	204.8 kHz
70 Hz	286.72 kHz
18 Hz	73.728 kHz

The output of the sweep clock generator (Q34) is sent to the 12-bit address counter which determines (Q39 to Q41) which 12-bit EPROM address (Q42) is to be accessed.

Part of the EPROM (8-bit) output is converted to an analog sweep signal by the D/A converter (Q43) which is then sent to the phase detector (Q31). The output of the phase detector (Q31) is returned to the sweep clock generator (Q34) through a DC amplifier and LPF, and forms a PLL. Part of the EPROM (Q42) output is used as the A6-A2 A/D converter clock signal.

④ AFC loop

This circuit synchronizes the frequency of the primary local signal with the IF input signal. The secondary IF signal sent from the A4 board is input to a 1/32 frequency divider (Q51 and Q52), whose output frequency-voltage is then converted by the pulse count detector (Q53).

FM signal components of the PCD output are then eliminated with a notch filter (Q56 and Q57), and the signal is then looped back to the primary local oscillator of the A1 LOCAL circuit via a DC amplifier (Q61) to form an AFC loop.

APPLICATION

REVISIONS

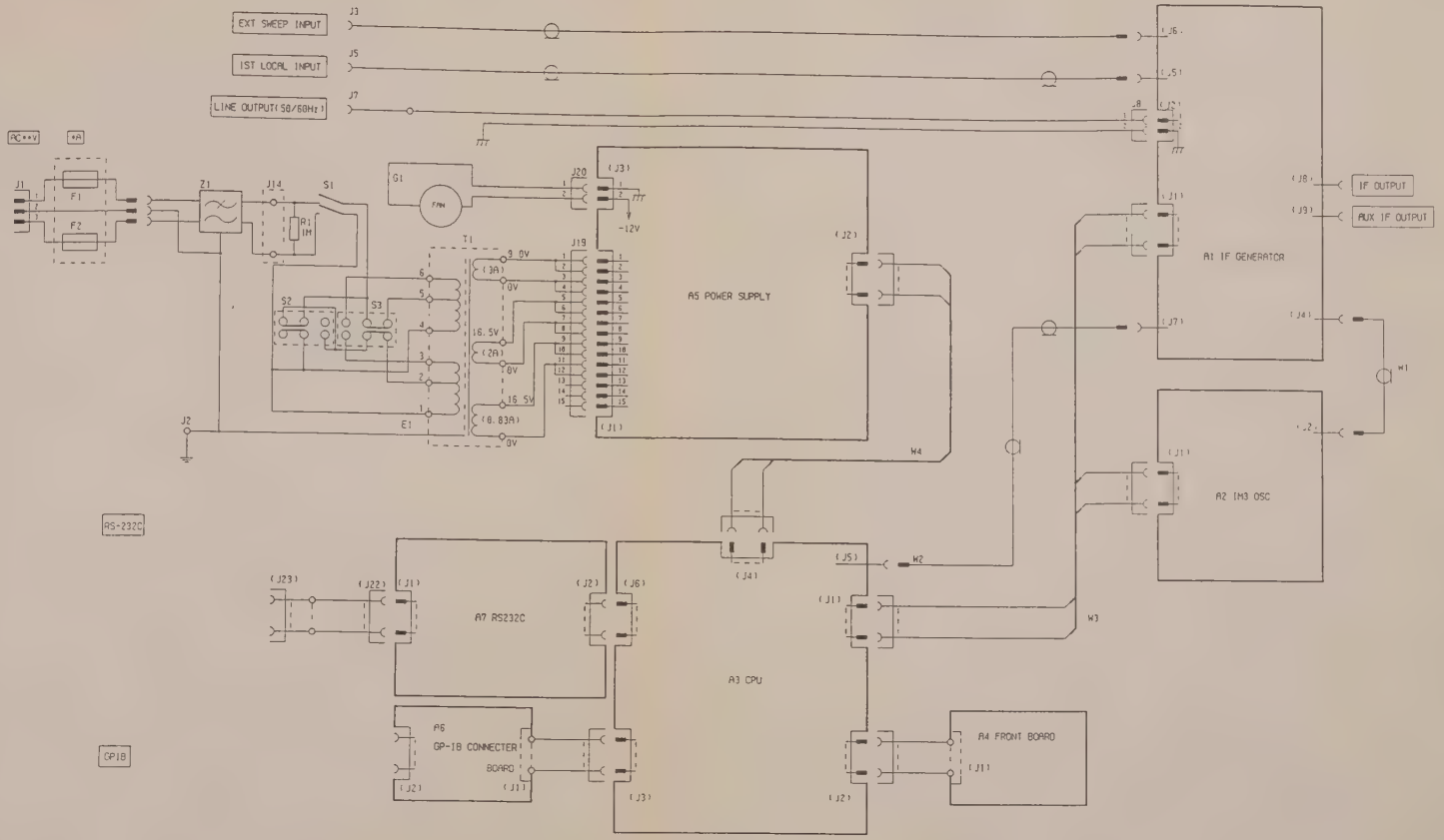

QTY	ITEM	PART No.	DESCRIPTION	MATERIAL	FINISH

CHECKED BY NAKAZAWA	DRAWN BY ALICE	SCALE :	
APPROVED BY TODA	DESIGNED BY TAKAHASI		

TITLE: ME4510B TRANSMITTER OVERALL

DRAWING No. 43W35208

PARTS LIST 44W86732

DEP

ANRITSU CORP.

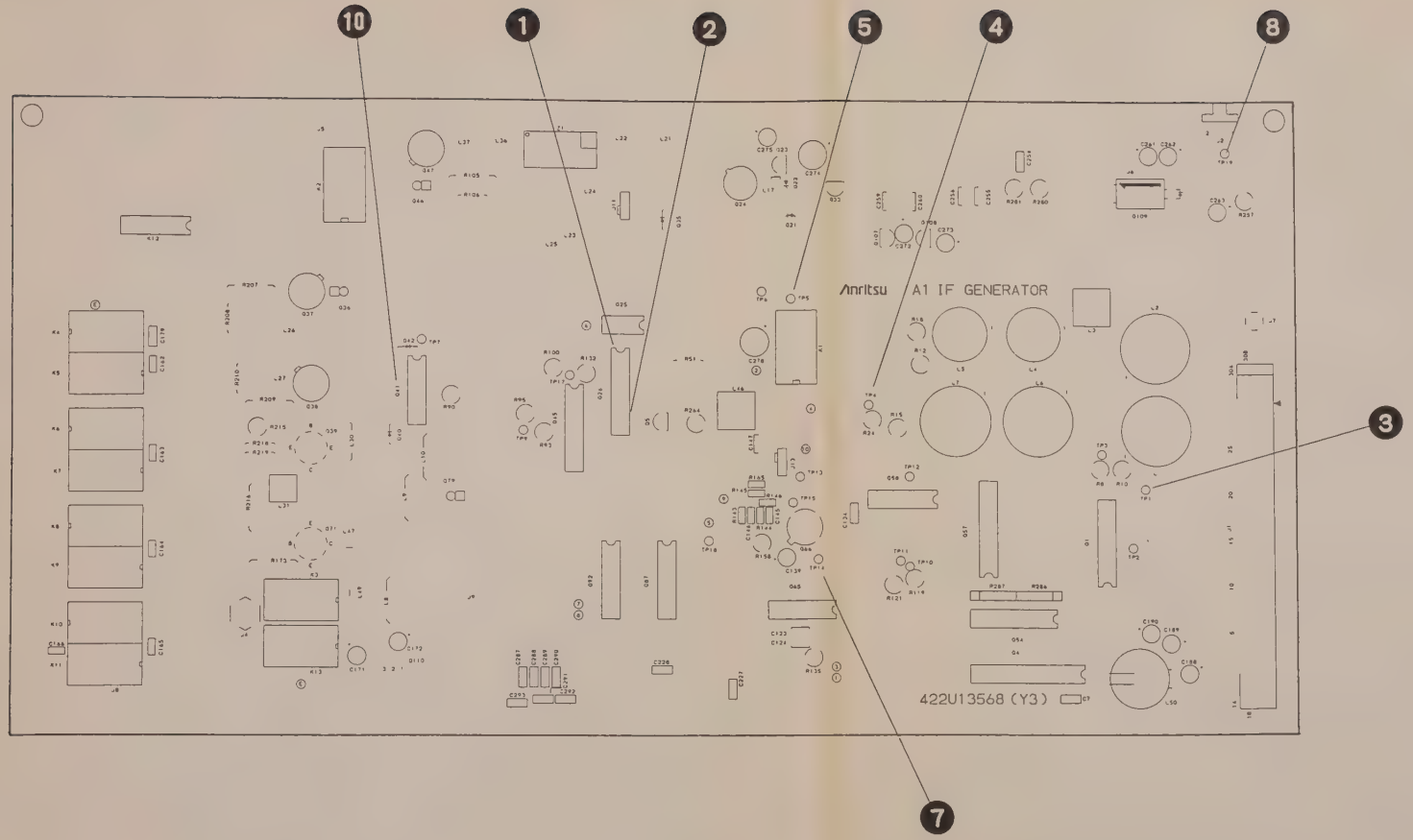

A1 IF GENERATOR PC board

Parts Layout **2** (1)

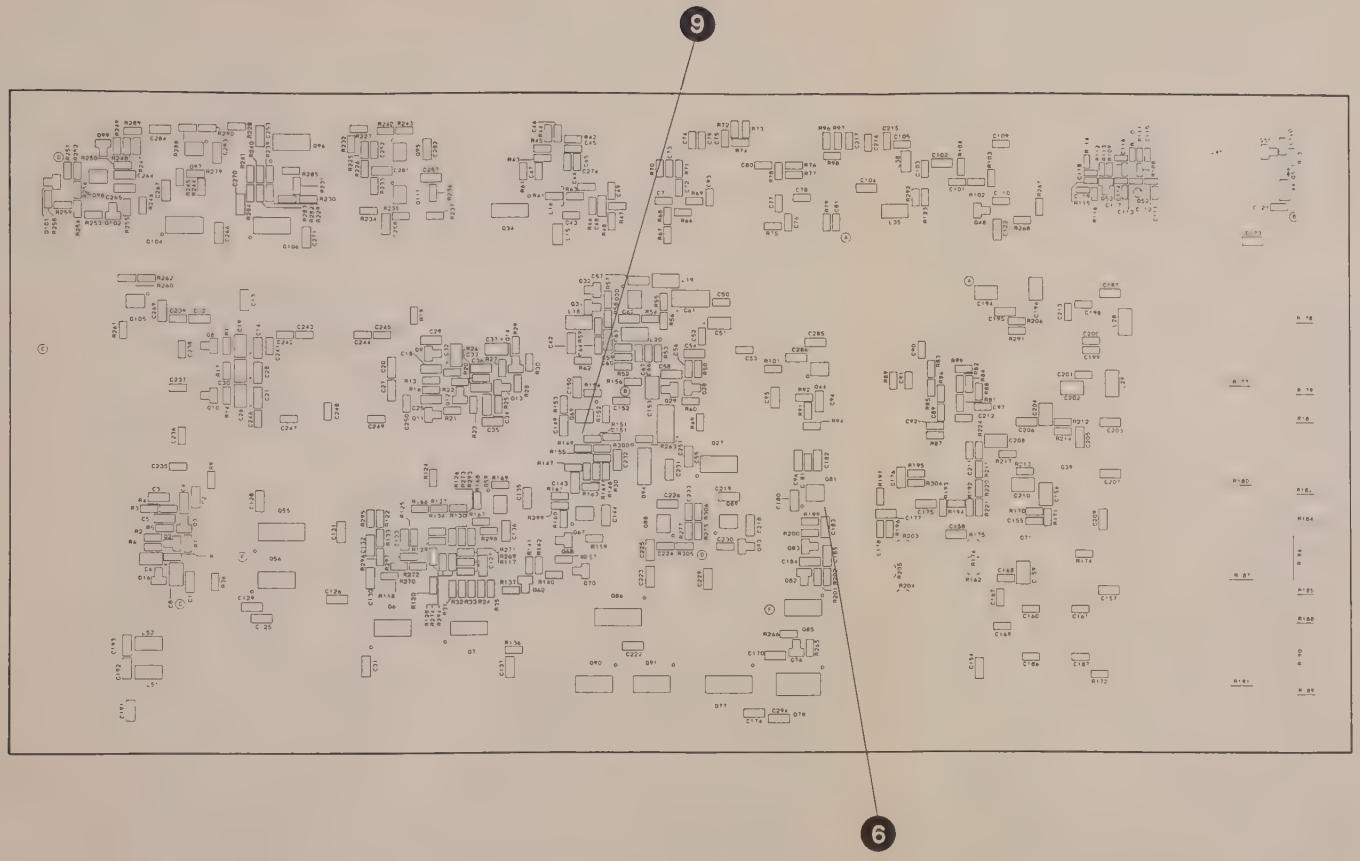

A1 IF GENERATOR PC Board
Parts Layout **2** (2)

43W35209

APPLICATION

REVISIONS

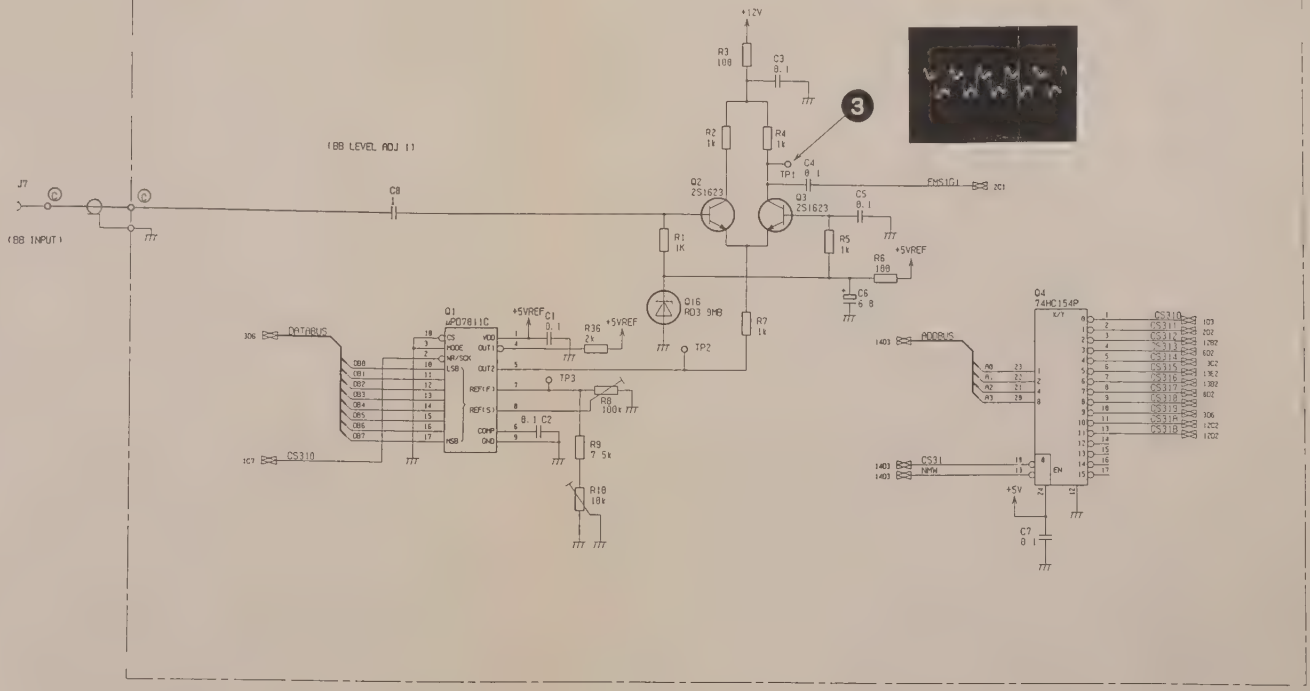

QTY	ITEM	PART No.	DESCRIPTION	MATERIAL	FINISH

CHECKED BY NAKAZAWA	DRAWN BY ENDOU	SCALE :	
APPROVED BY TODA	DESIGNED BY TOSIMA		
TITLE A1 IF GENERATOR		DRAWING No. 43W35209	1/14

PARTS LIST 44W86733

DEP

ANRITSU CORP.

APPLICATION

REVISIONS

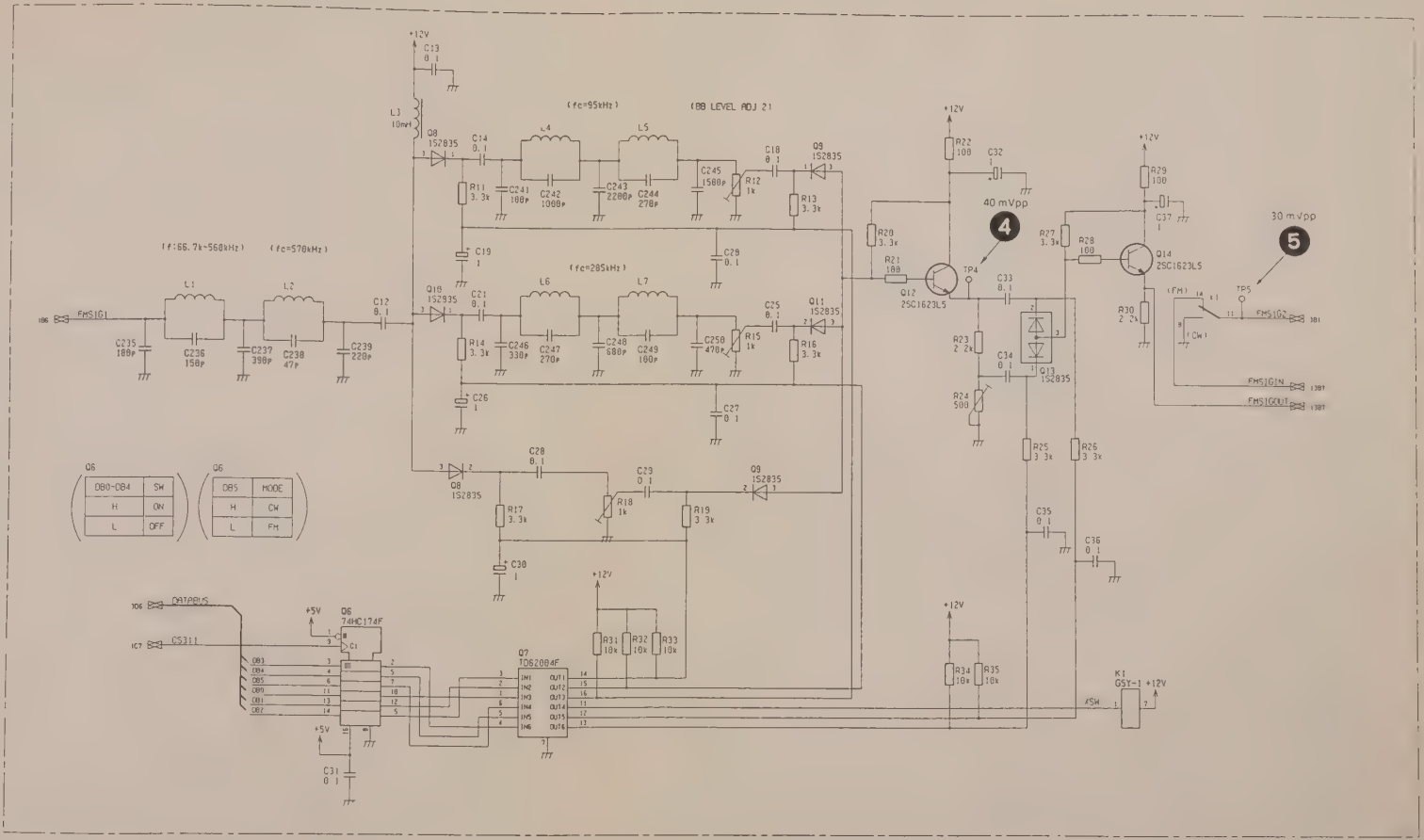

QTY	ITEM	PART No.	DESCRIPTION	MATERIAL	FINISH

CHECKED BY NAKAZAWA	DRAWN BY ENDOU	SCALE :	
APPROVED BY TODA	DESIGNED BY TOSIMA		

TITLE: A1 IF GENERATOR

DRAWING No. 43W35209 2/14

DEP

ANRITSU CORP.

APPLICATION

REVISIONS

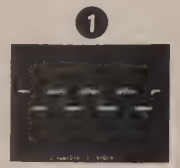

QTY	ITEM	PART No.	DESCRIPTION	MATERIAL	FINISH

CHECKED BY	NAKAZAWA	DRAWN BY	ENDOU
APPROVED BY	TODA	DESIGNED BY	TOSIMA

SCALE :

TITLE: A1 IF GENERATOR

DRAWING No. 43W35209

3/14

DEP

ANRITSU CORP.

3-67/3-68

APPLICATION

REVISIONS

SWEEP OSC (566.5~721.5MHz)

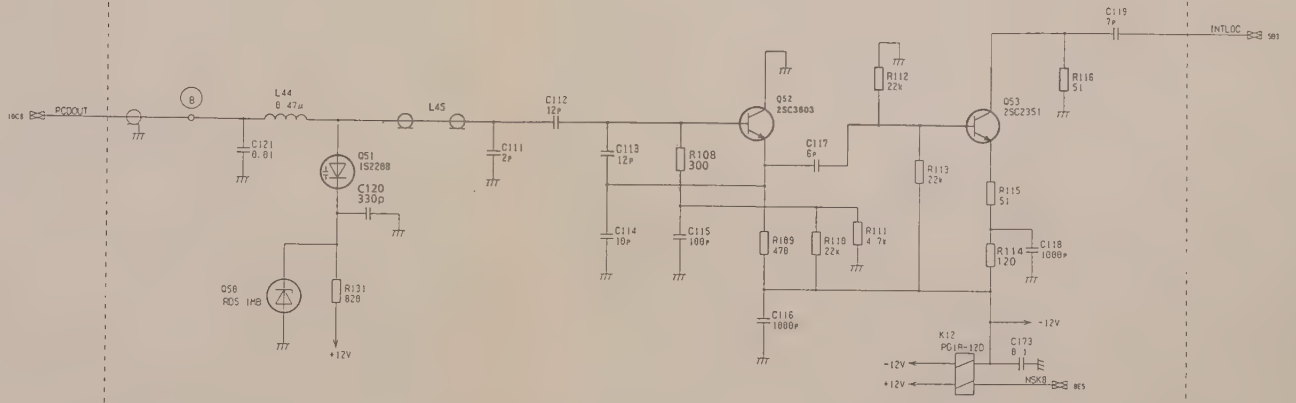

QTY	ITEM	PART No.	DESCRIPTION	MATERIAL	FINISH

CHECKED BY NAKAZAWA	DRAWN BY ENDOU	SCALE :
APPROVED BY TODA	DESIGNED BY TOSIMA	

TITLE: A1 IF GENERATOR

DRAWING No. 43W35209 4/14

DEP

ANRITSU CORP.

APPLICATION

REVISIONS

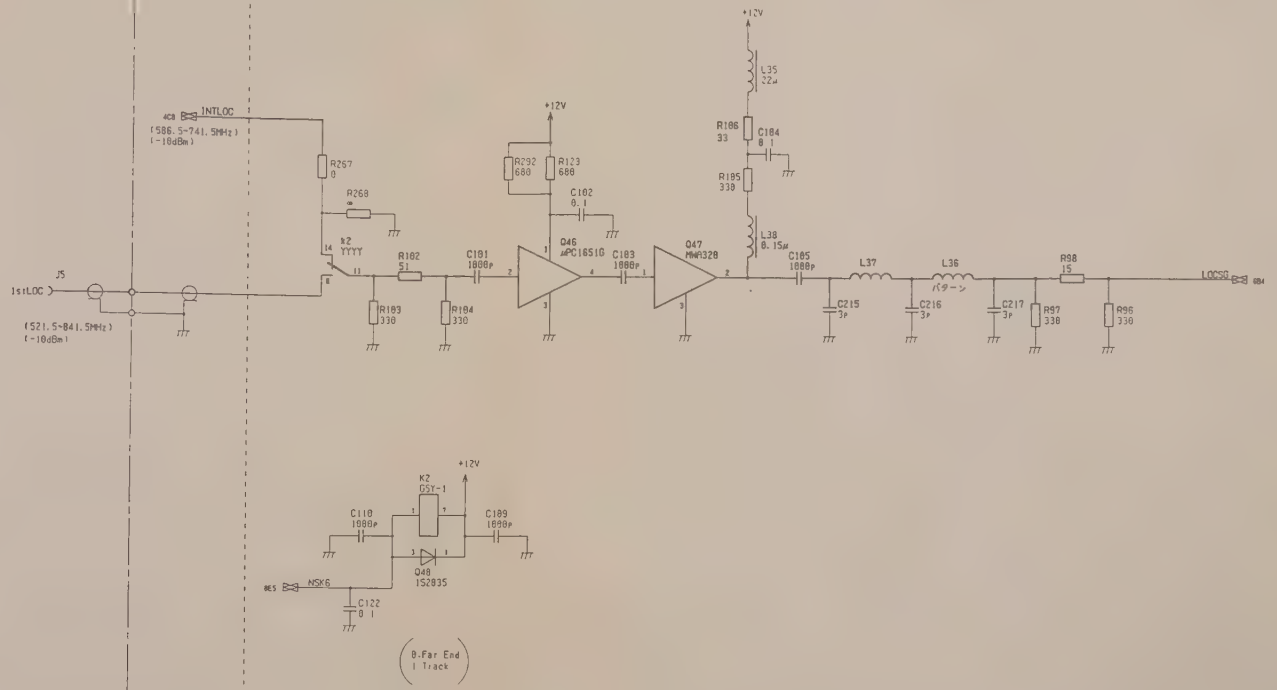

QTY	ITEM	PART No.	DESCRIPTION	MATERIAL	FINISH

CHECKED BY NAKAZAWA	DRAWN BY ENDOU	SCALE :	2
APPROVED BY TODA	DESIGNED BY TOSIMA		

TITLE: A1 IF GENERATOR

DRAWING No. 43W35209 5/14

DEP

APPLICATION

REVISIONS

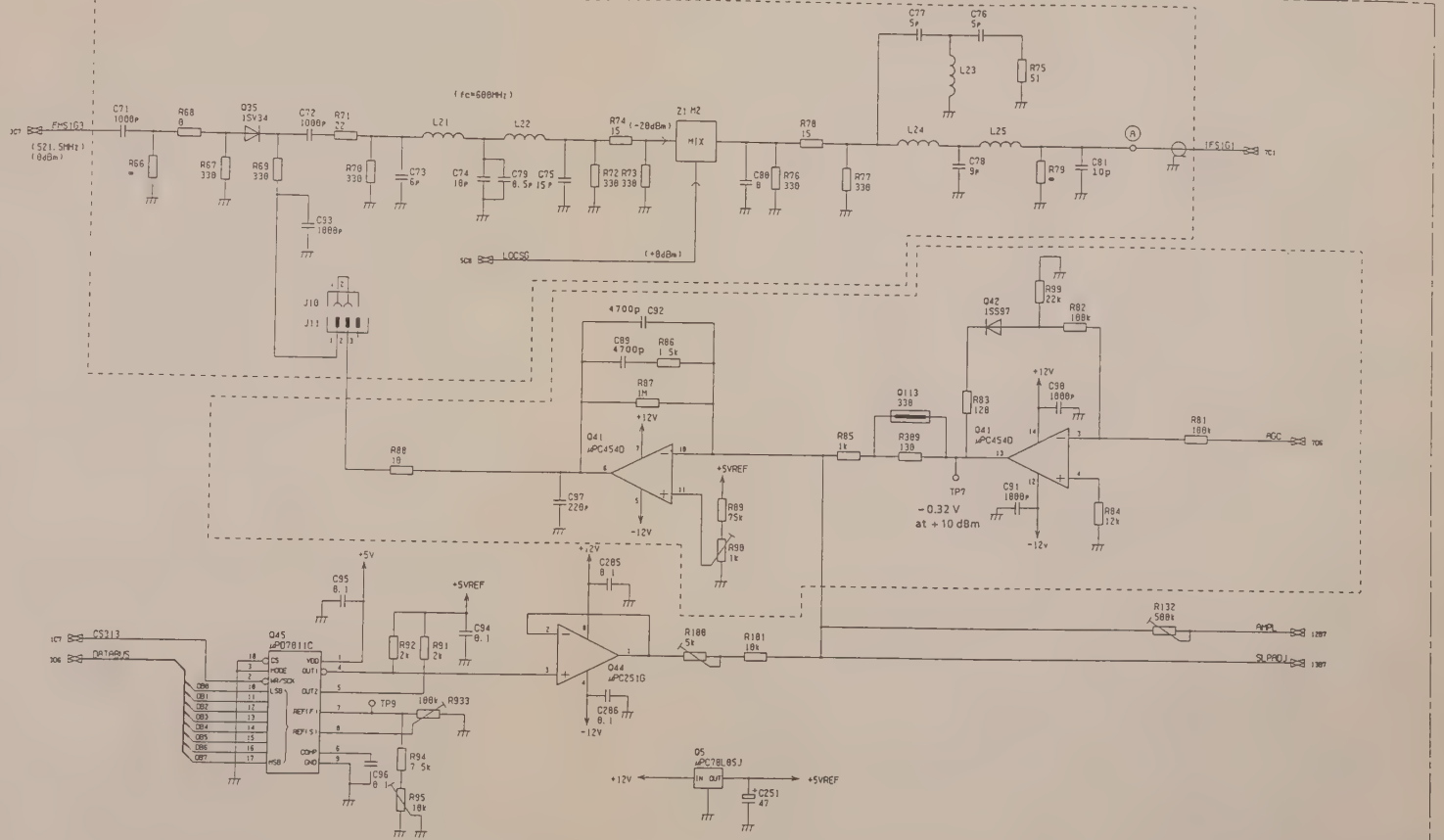

QTY	ITEM	PART No.	DESCRIPTION	MATERIAL	FINISH

CHECKED BY NAKAZAWA	DRAWN BY ENDOU	SCALE :	2
APPROVED BY TODA	DESIGNED BY TOSIMA		
TITLE A1 IF GENERATOR		DRAWING No. 43W35209	6/14

DEP

ANRITSU CORP.

3-73/3-74

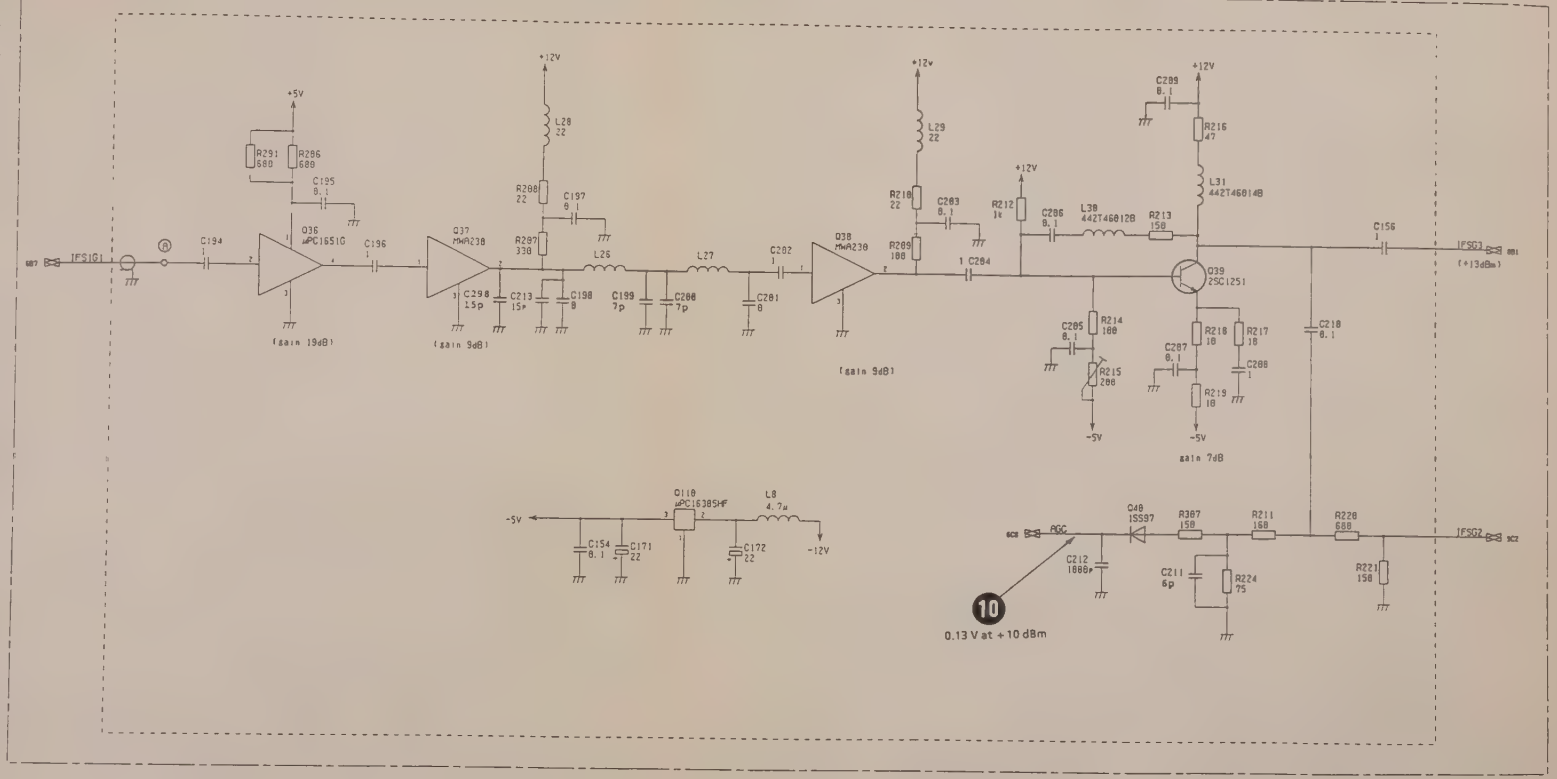

QTY	ITEM	PART No.	DESCRIPTION	MATERIAL	FINISH

CHECKED BY NAKAZAWA	DRAWN BY ENDOU	SCALE :	
APPROVED BY TODA	DESIGNED BY TOSIMA		
TITLE A1 IF GENERATOR		DRAWING No. 43W35209 7/14	

DEP

ANRITSU CORP.

3-75/3-76

43W35209

APPLICATION

REVISIONS

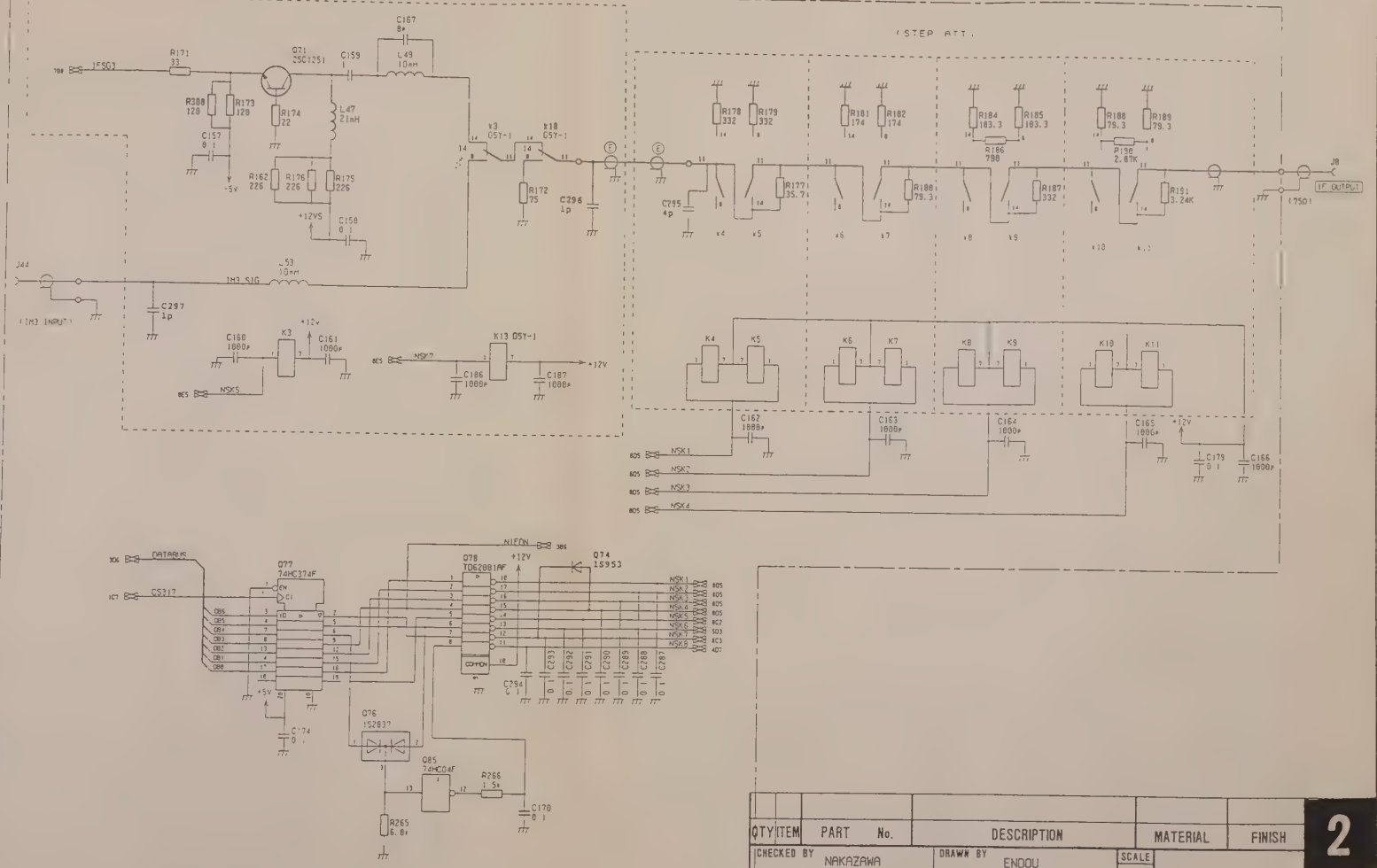

QTY	ITEM	PART No.	DESCRIPTION	MATERIAL	FINISH

CHECKED BY NAKAZAWA	DRAWN BY ENDOU	SCALE :	
APPROVED BY TODA	DESIGNED BY TOSIMA		

TITLE: A1 IF GENERATOR

DRAWING No. 43W35209 8/14

DEP

ANRITSU CORP.

3-77/3-78

APPLICATION

REVISIONS

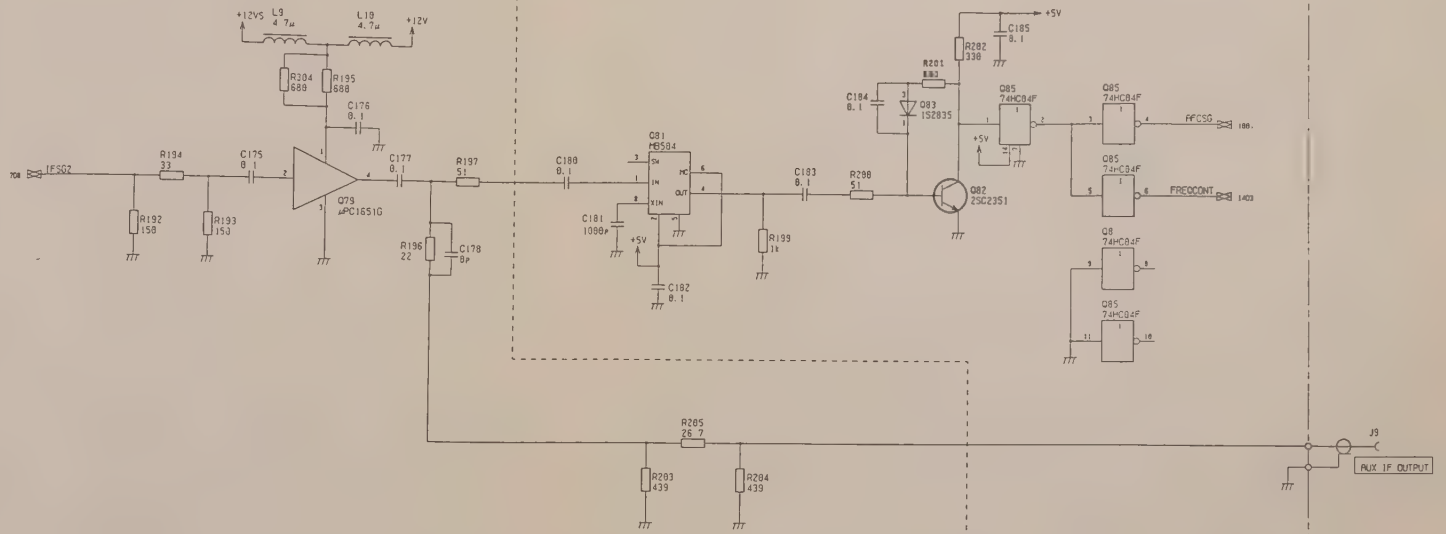

QTY	ITEM	PART No.	DESCRIPTION	MATERIAL	FINISH

CHECKED BY NAKAZAWA	DRAWN BY ENDOU	SCALE :	
APPROVED BY TODA	DESIGNED BY TOSIMA		

TITLE: A1 IF GENERATOR

DRAWING No. 43W35209 9/14

DEP

ANRITSU CORP. 3-79/3-80

2

43W35209

APPLICATION

REVISIONS

QTY	ITEM	PART No.	DESCRIPTION	MATERIAL	FINISH

CHECKED BY NAKAZAWA	DRAWN BY ENDOU	SCALE :	
APPROVED BY TODA	DESIGNED BY TOSIMA		
TITLE A1 IF GENERATOR		DRAWING No. 43W35209	18/14

DEP

ANRITSU CORP.

3-81/3-82

APPLICATION

REVISIONS

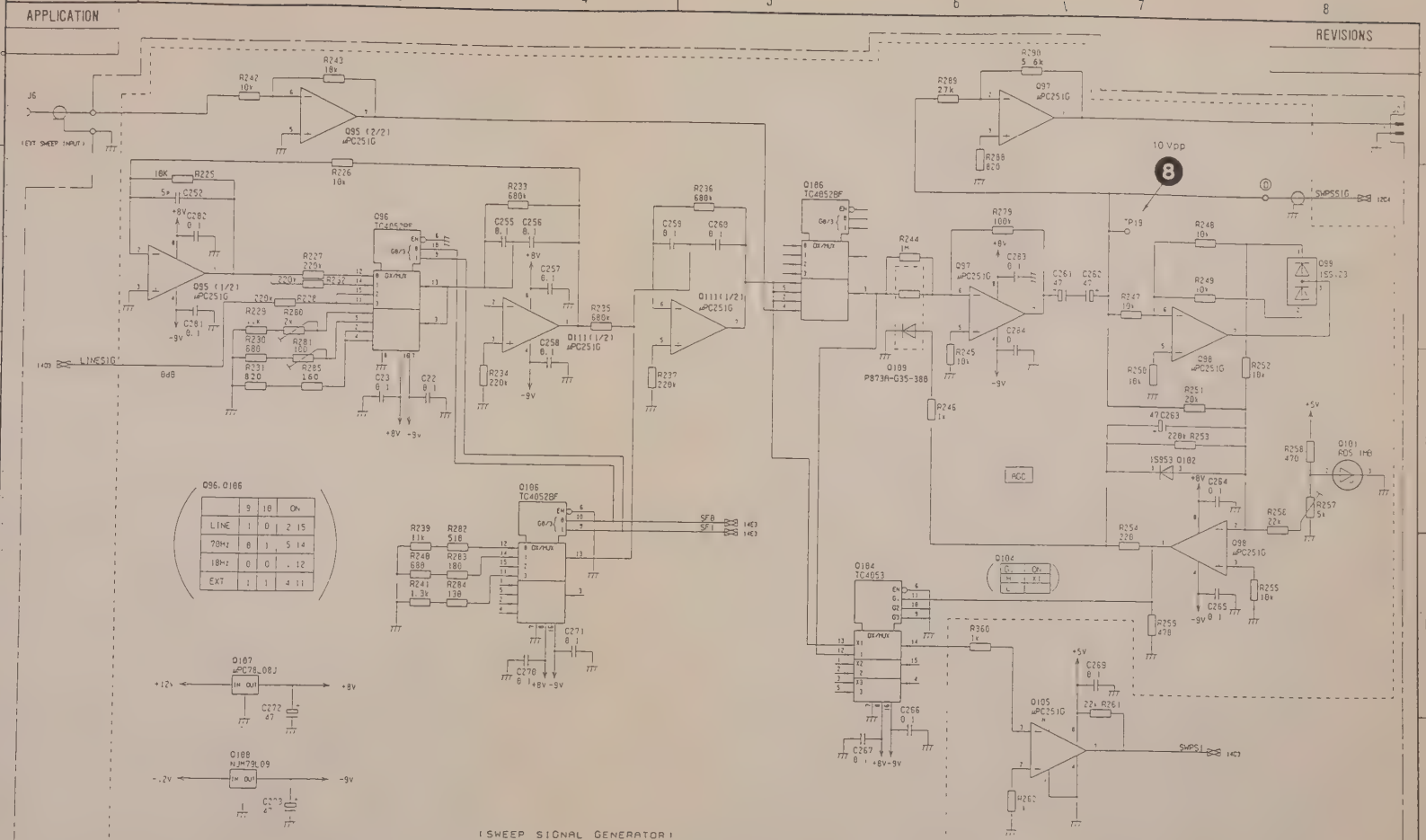

QTY	ITEM	PART No.	DESCRIPTION	MATERIAL	FINISH

CHECKED BY NAKAZAWA	DRAWN BY ENDOU	SCALE :	
APPROVED BY TODA	DESIGNED BY TOSIMA		

TITLE: A1 IF GENERATOR

DRAWING No. 43W35209 11/14

DEP

ANRITSU CORP.

APPLICATION

REVISIONS

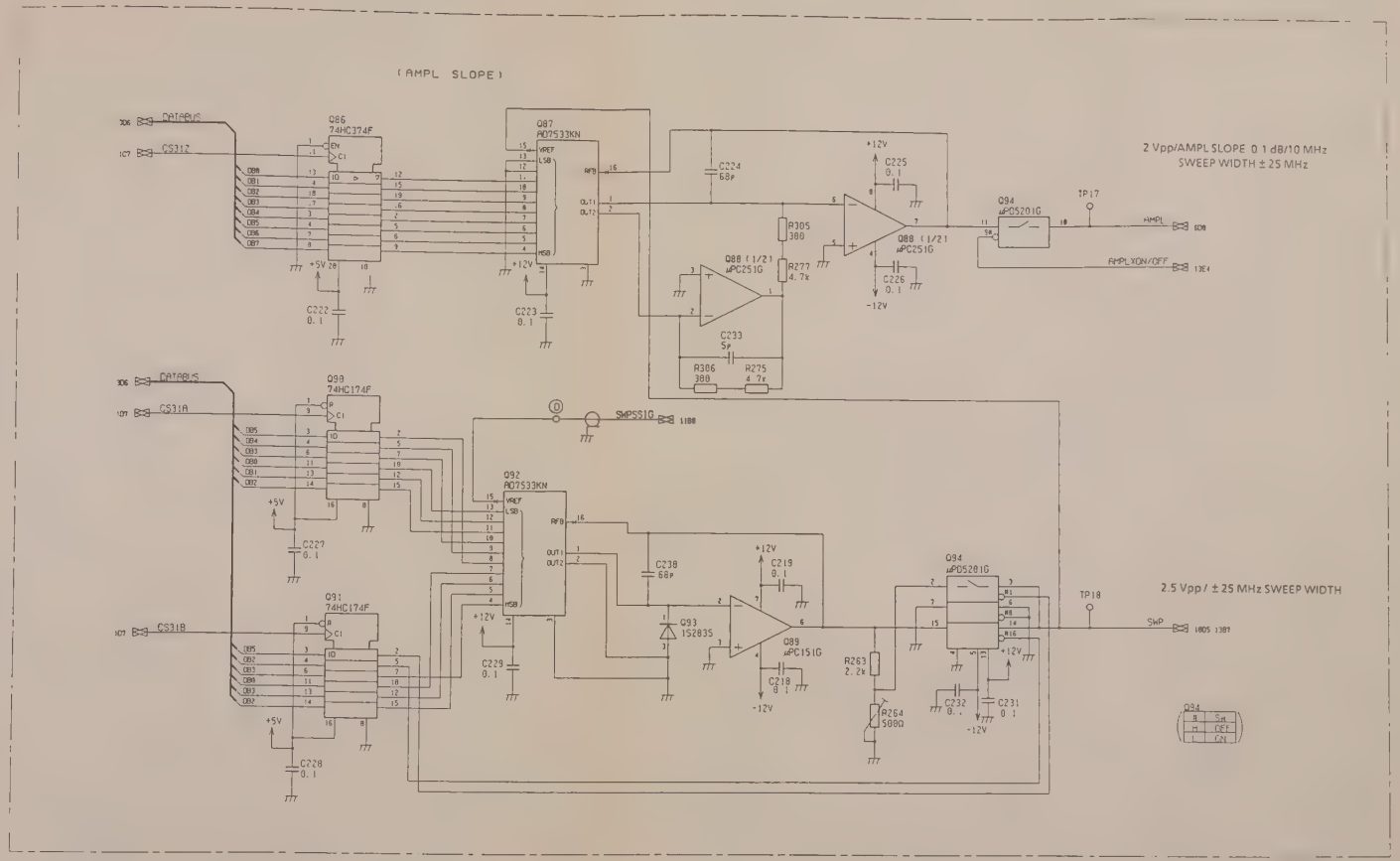

QTY	ITEM	PART No.	DESCRIPTION	MATERIAL	FINISH

CHECKED BY NAKAZAWA	DRAWN BY ENDOU	SCALE :	
APPROVED BY TODA	DESIGNED BY TOSIMA		
TITLE A1 IF GENERATOR		DRAWING No. 43W35209	12/14

DEP

ANRITSU CORP.

3-85/3-86

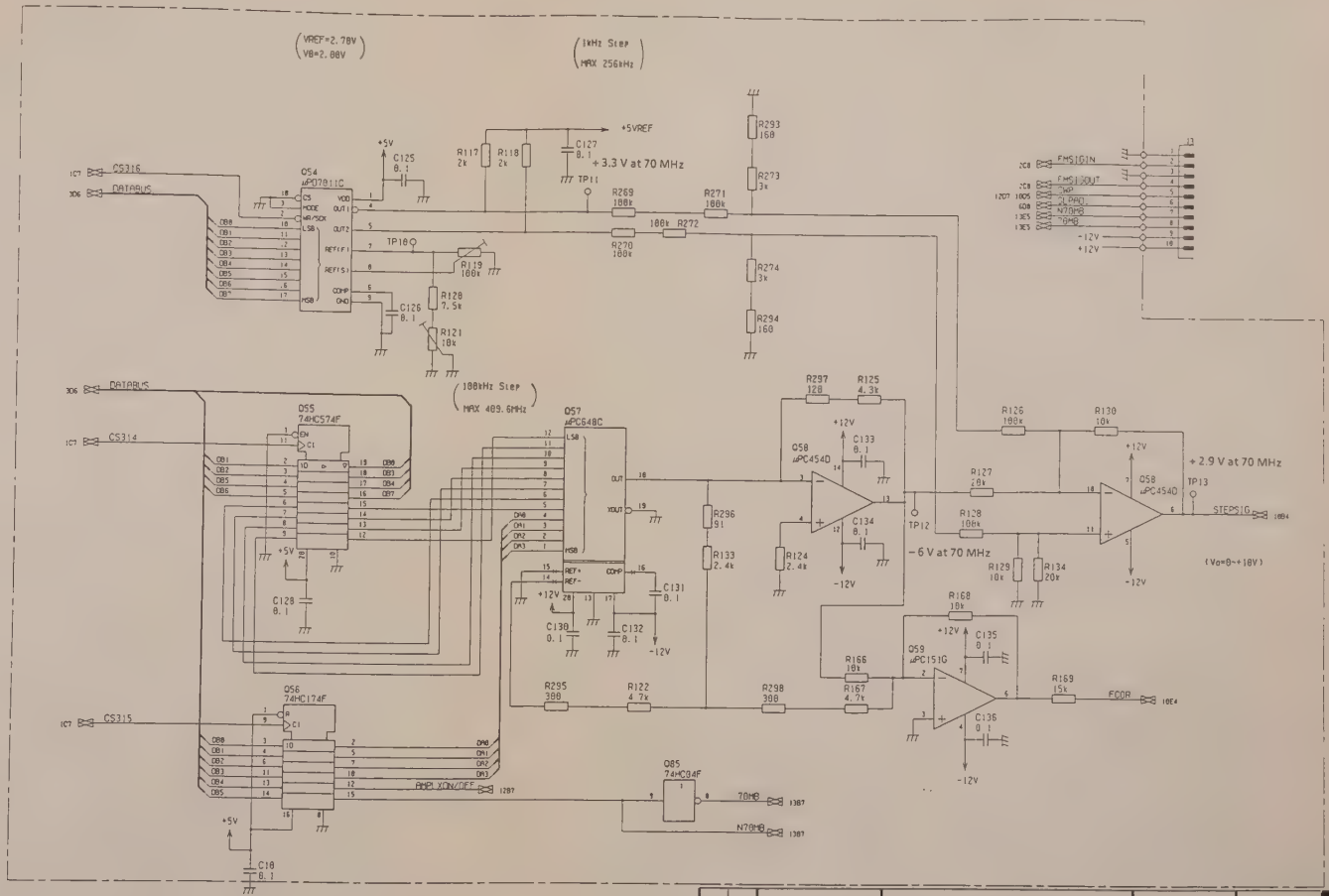

QTY	ITEM	PART No.	DESCRIPTION	MATERIAL	FINISH

CHECKED BY NAKAZAWA	DRAWN BY ENDOU	SCALE :	
APPROVED BY TODA	DESIGNED BY TOSIMA		
TITLE A1 IF GENERATOR		DRAWING No. 43W35209	13/14

2

DEP

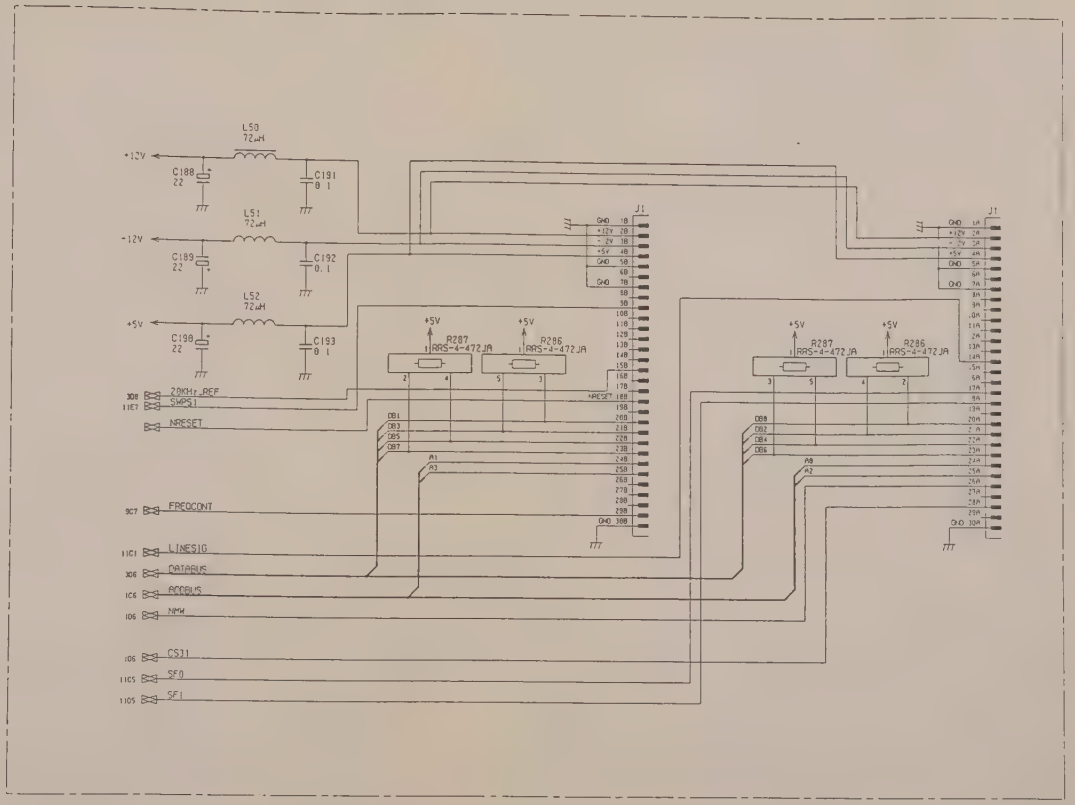

QTY	ITEM	PART No.	DESCRIPTION	MATERIAL	FINISH

CHECKED BY NAKAZAWA	DRAWN BY ENDOU	SCALE :	
APPROVED BY TODA	DESIGNED BY TOSIMA		
TITLE A1 IF GENERATOR		DRAWING No. 43W35209	13/14

2

DEP

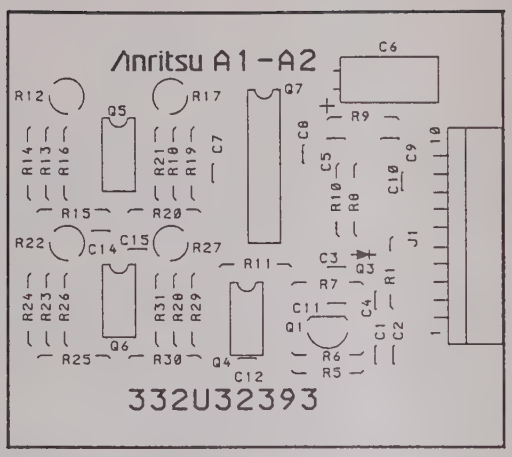

A1-A2 SLOPE ADJ PC Board Parts Layout **3**

33W31881

APPLICATION

REVISIONS

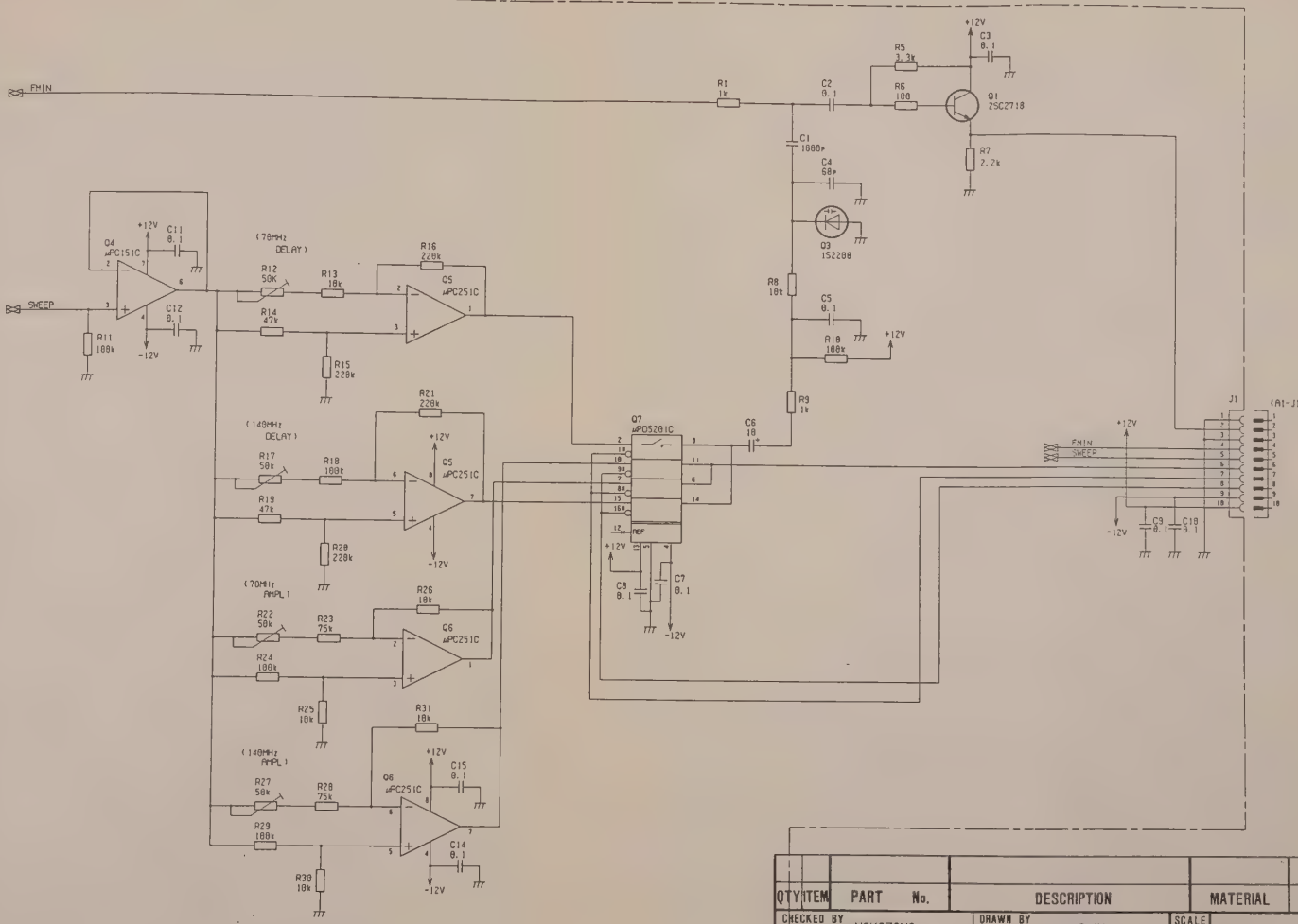

QTY	ITEM	PART No.	DESCRIPTION	MATERIAL	FINISH

CHECKED BY NAKAZAWA	DRAWN BY NISIGUTI	SCALE :	
APPROVED BY TODA	DESIGNED BY TAKAHASI		

TITLE: A1-A2 SLOPE ADJ

DRAWING No. 33W31881 1/1

PARTS LIST 34W98026

DEP

3

ANRITSU CORP.

3-91

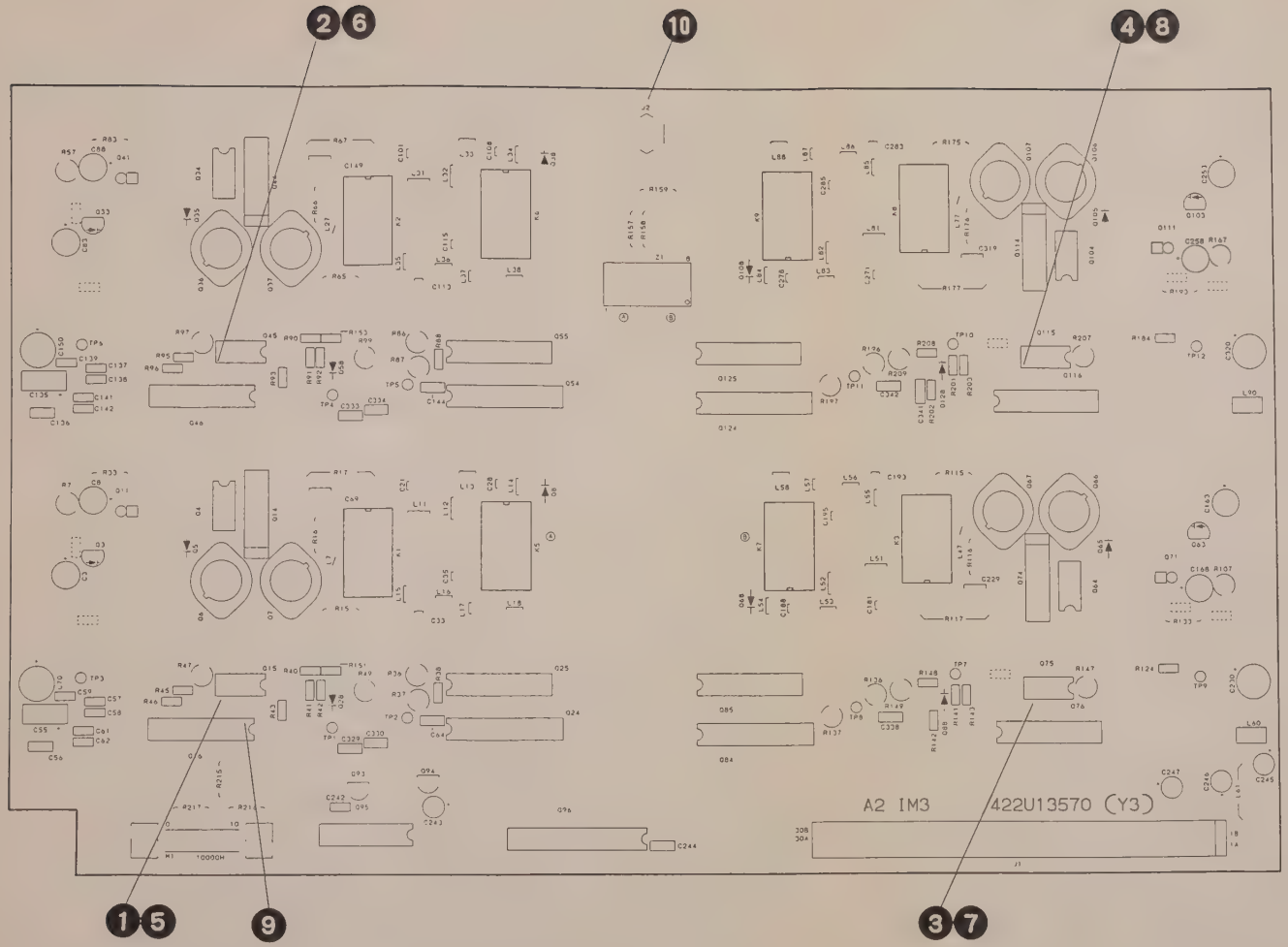

A2 IM3 OSC PC Board
Parts Layout 4 (1)

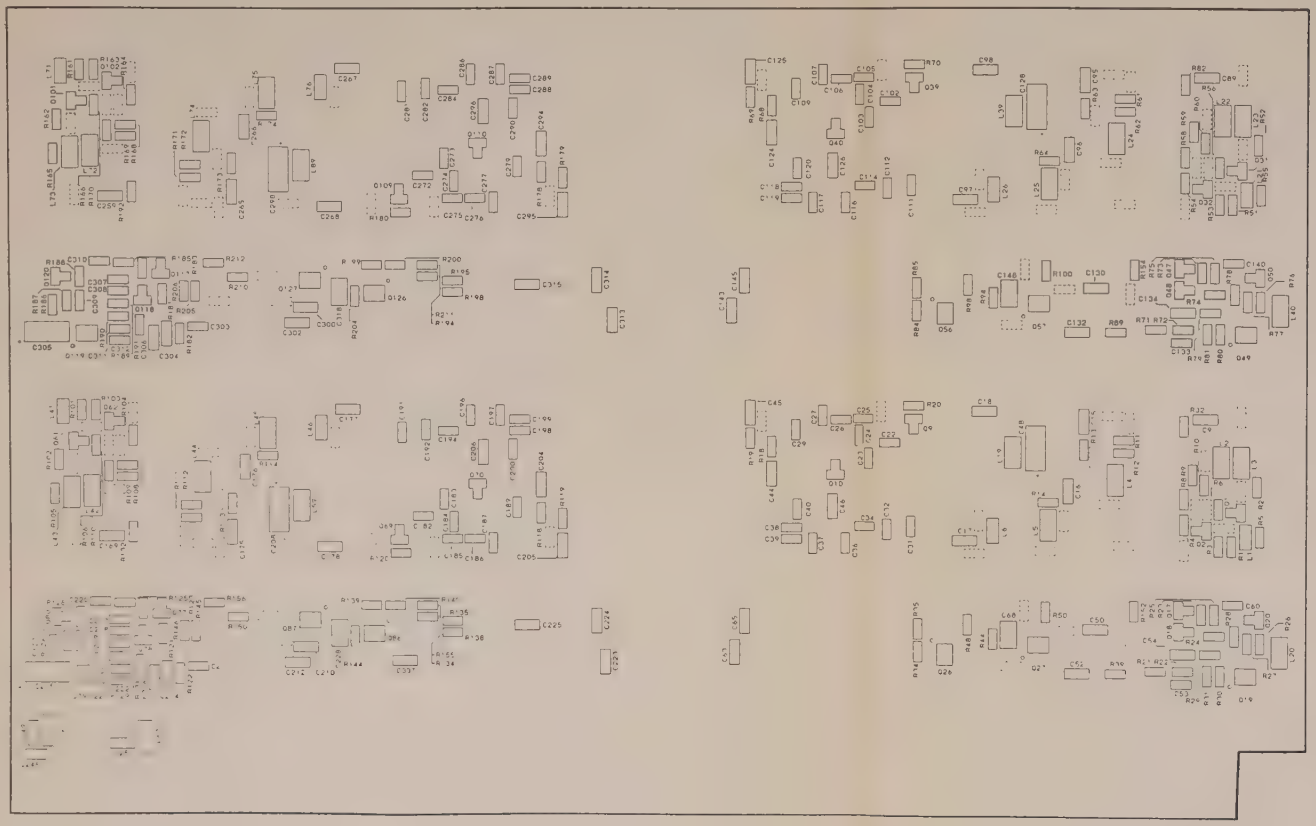

A2 IM3 OSC PC Board
Parts Layout **4** (2)

43W35210

APPLICATION

REVISIONS

(PLL)

(OSC1)

(Vco 55-170MHz)

(fc=90MHz)

(fc=180MHz)

(ALC)

5 to 8

1 to 4

TP1:
−0.45 V at 0.0 dBm Output

QTY	ITEM	PART No.	DESCRIPTION	MATERIAL	FINISH

CHECKED BY	NAKAZAWA	DRAWN BY	IWASAWA
APPROVED BY	TODA	DESIGNED BY	TOSIMA

SCALE :

TITLE

A2 IM3 OSC

DRAWING No. 43W35210 1/5

PARTS LIST 44W86734

DEP

4

ANRITSU CORP.

3-95/3-96

43W35210

APPLICATION

REVISIONS

(PLL)

(OSC2)

(ALC)

5 to 8

1 to 4

QTY	ITEM	PART No.	DESCRIPTION	MATERIAL	FINISH

CHECKED BY	NAKAZAWA	DRAWN BY	IWASAWA
APPROVED BY	TODA	DESIGNED BY	TOSIMA
SCALE	:		

TITLE: A2 IM3 OSC

DRAWING No. 43W35210

4

DEP

ANRITSU CORP.

3-97/3-98

43W35210

APPLICATION

REVISIONS

DEP

(PLL)

(OSC3)

(Vco 55~170MHz)

(fc=90MHz)

(fc=180MHz)

(ALC)

5 to 8

1 to 4

QTY	ITEM	PART No.	DESCRIPTION	MATERIAL	FINISH

CHECKED BY	NAKAZAWA	DRAWN BY	IWASAWA
APPROVED BY	TODA	DESIGNED BY	TOSIMA
TITLE	A2 IM3 OSC	SCALE	:
		DRAWING No.	43W35210 3/5

4

ANRITSU CORP.

3-99/3-100

43W35210

APPLICATION

REVISIONS

QTY	ITEM	PART No.	DESCRIPTION	MATERIAL	FINISH

CHECKED BY	NAKAZAWA	DRAWN BY	IWASAWA
APPROVED BY	TODA	DESIGNED BY	TOSIMA

SCALE :

TITLE: A2 IM3 OSC

DRAWING No. 43W35210 4/5

4

DEP

ANRITSU CORP.

3-101/3-102

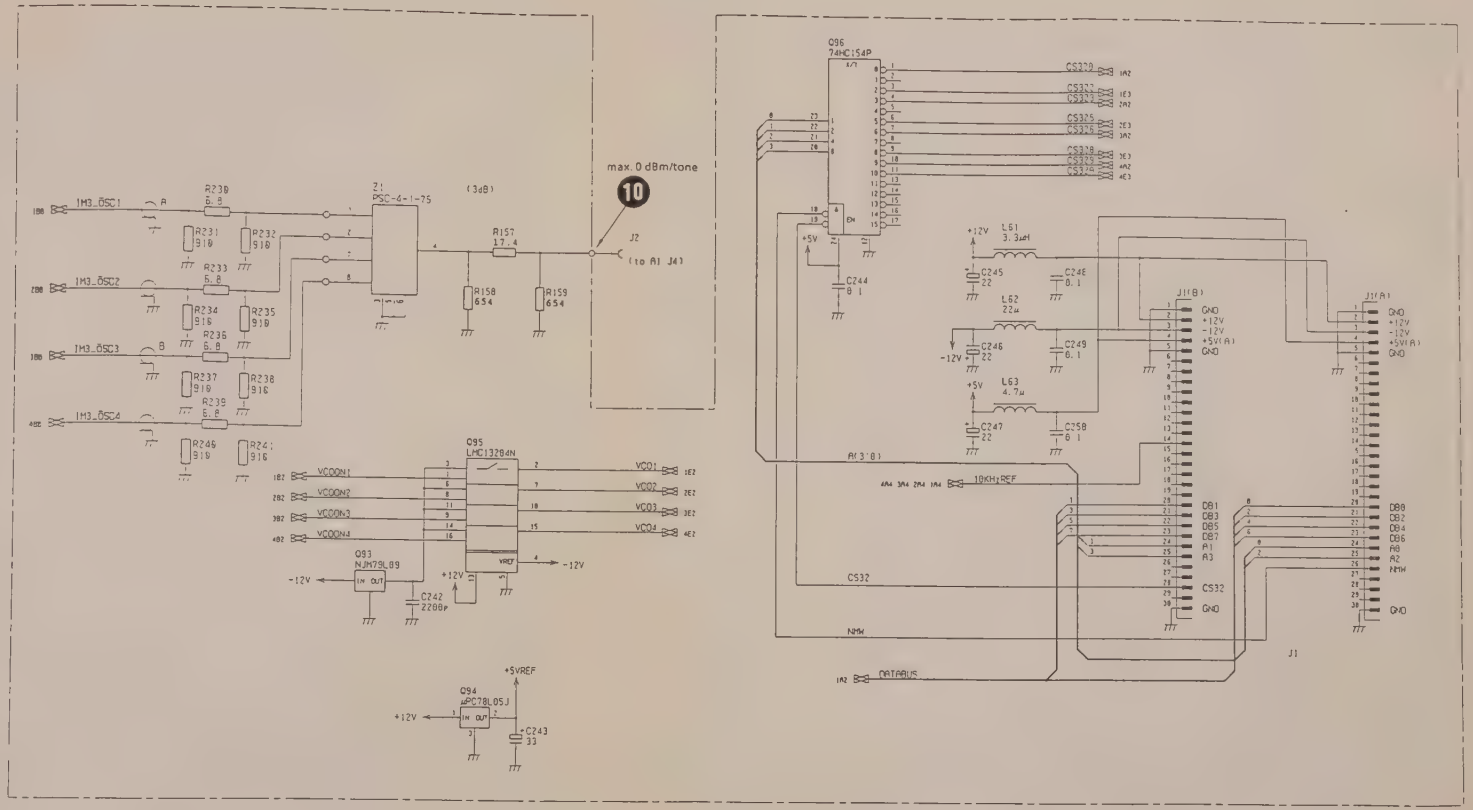

QTY	ITEM	PART No.	DESCRIPTION	MATERIAL	FINISH

CHECKED BY NAKAZAWA	DRAWN BY IWASAWA	SCALE :
APPROVED BY TODA	DESIGNED BY TOSIMA	

TITLE: A2 IM3 OSC

DRAWING No. 43W35210 5/5

DEP

4

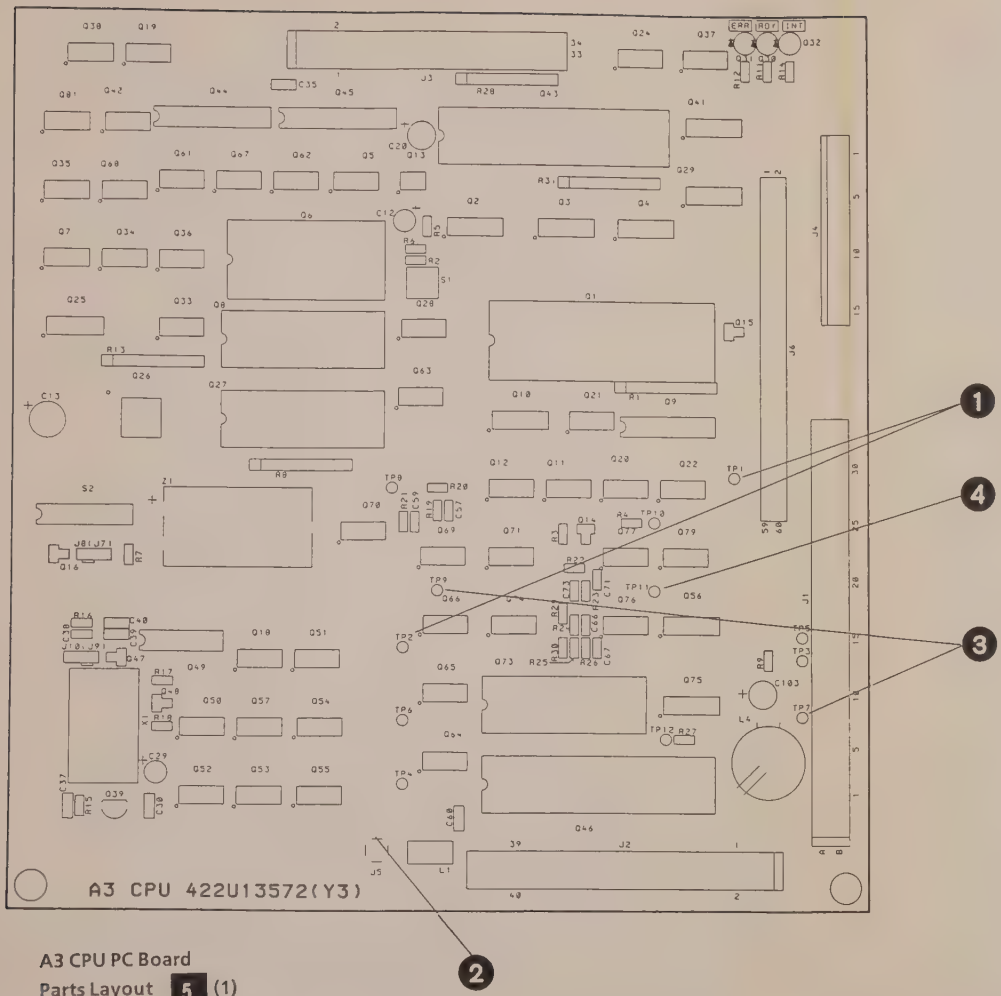

A3 CPU PC Board
Parts Layout **5** (1)

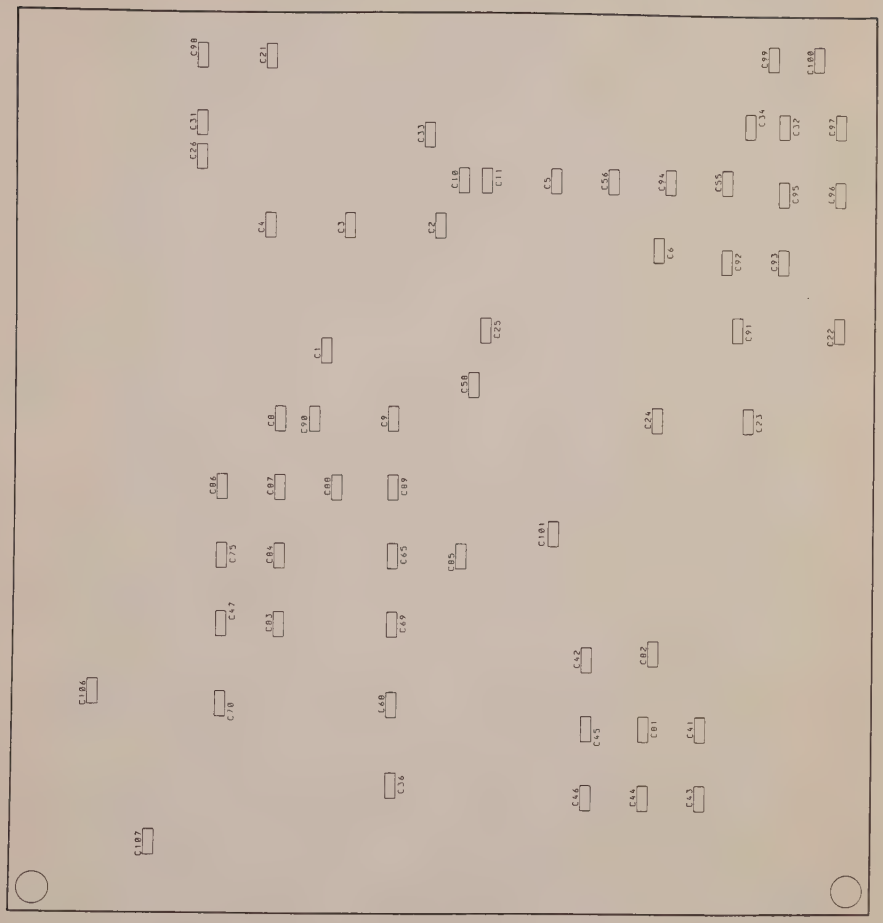

A3 CPU PC Board
Parts Layout **5** (2)

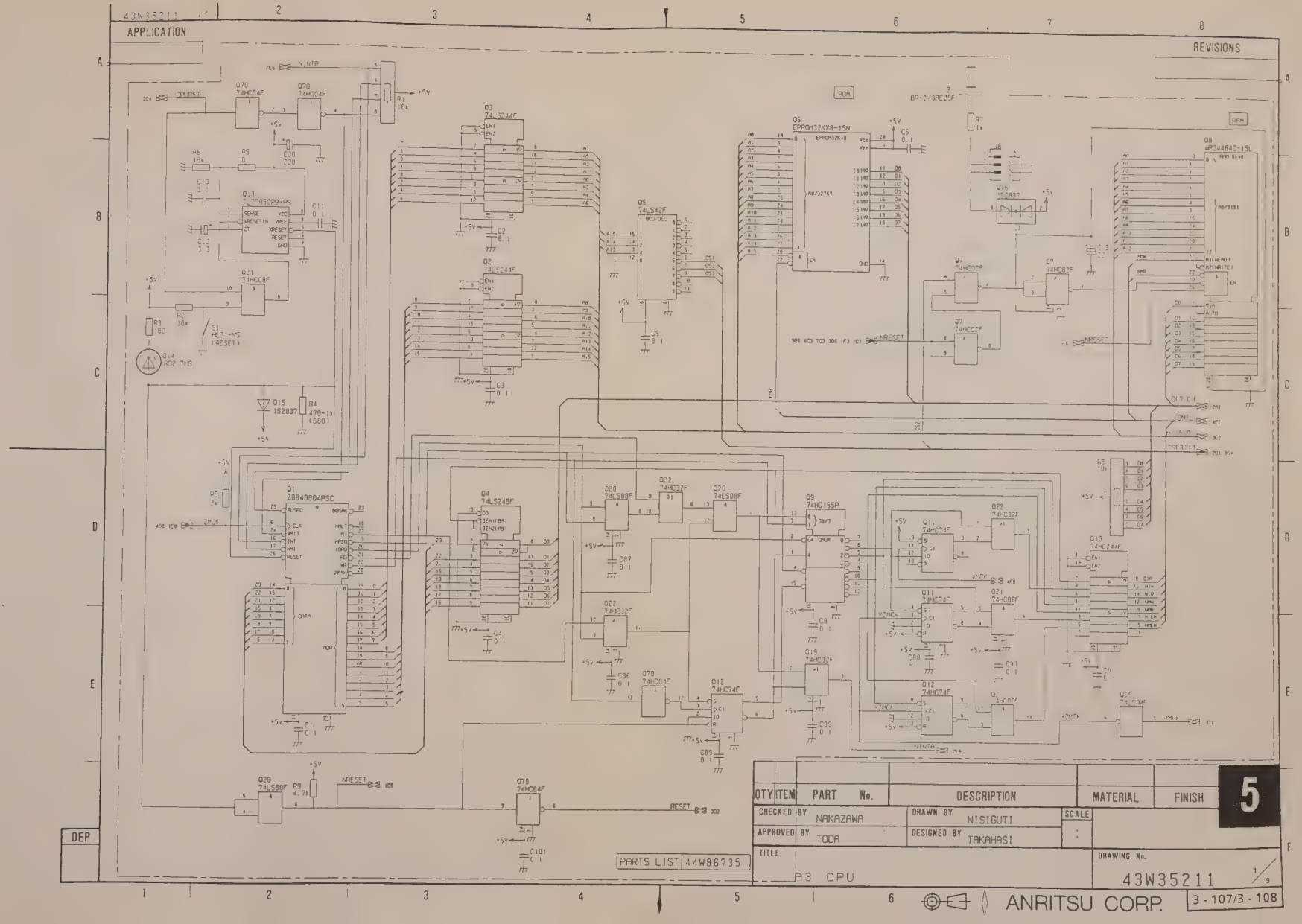
43W35211
APPLICATION
REVISIONS
PARTS LIST 44W86735
QTY ITEM PART No. DESCRIPTION MATERIAL FINISH
CHECKED BY NAKAZAWA
DRAWN BY NISIGUTI
APPROVED BY TODA
DESIGNED BY TAKAHASI
SCALE
TITLE A3 CPU
DRAWING No. 43W35211
ANRITSU CORP.
3-107/3-108
DEP

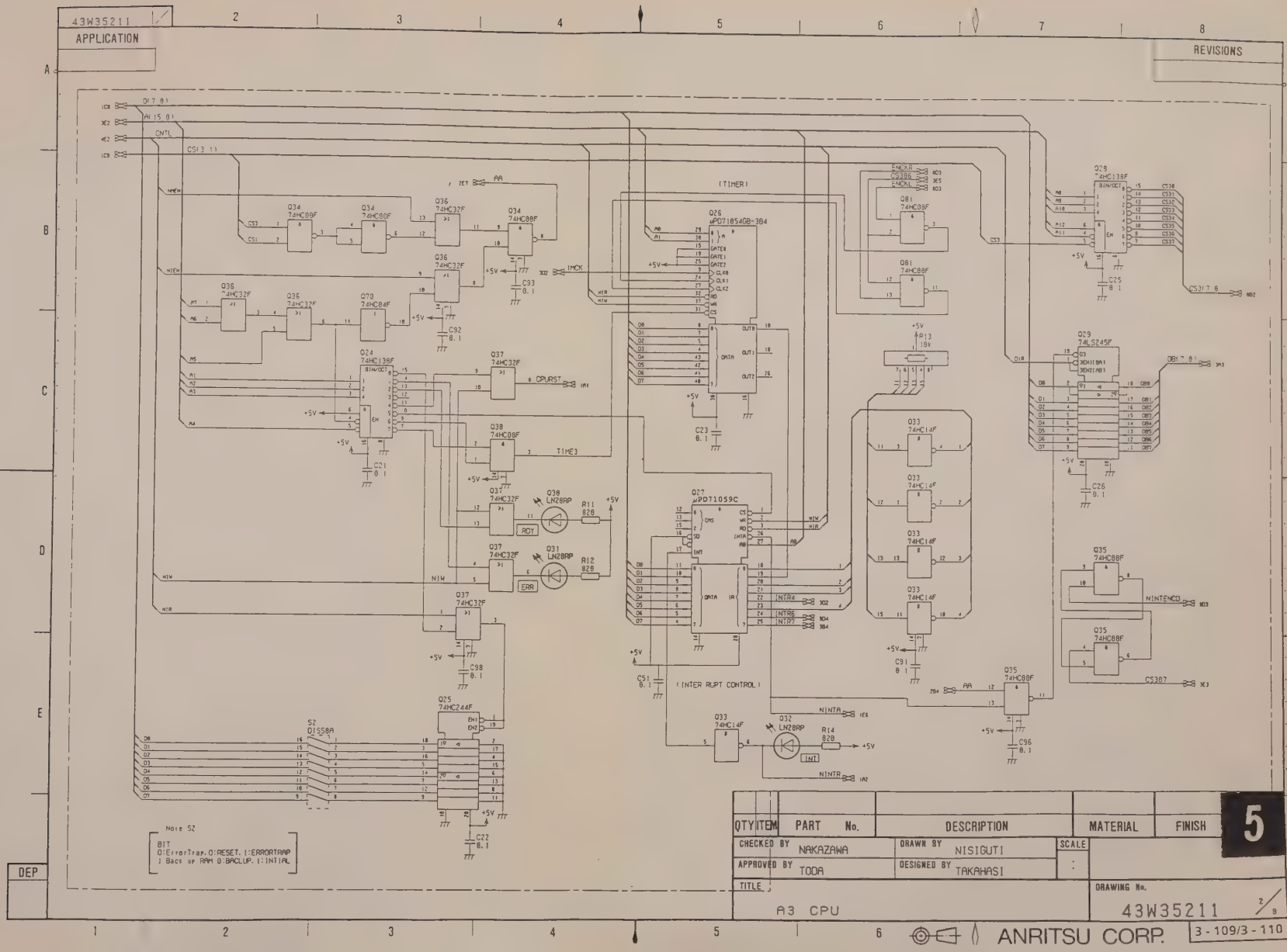
43W35211
APPLICATION
REVISIONS
(TIMER)
(INTER RUPT CONTROL)
Note S2
BIT
0:ErrorTrap,0:RESET, 1:ERRORTRAP
) Back up RAM 0:BACLUP, 1:INTIAL
QTY ITEM PART No.
DESCRIPTION
MATERIAL
FINISH
CHECKED BY NAKAZAWA
DRAWN BY NISIGUTI
APPROVED BY TODA
DESIGNED BY TAKAHASI
SCALE
TITLE
A3 CPU
DRAWING No.
43W35211
ANRITSU CORP.
3-109/3-110
DEP

APPLICATION

REVISIONS

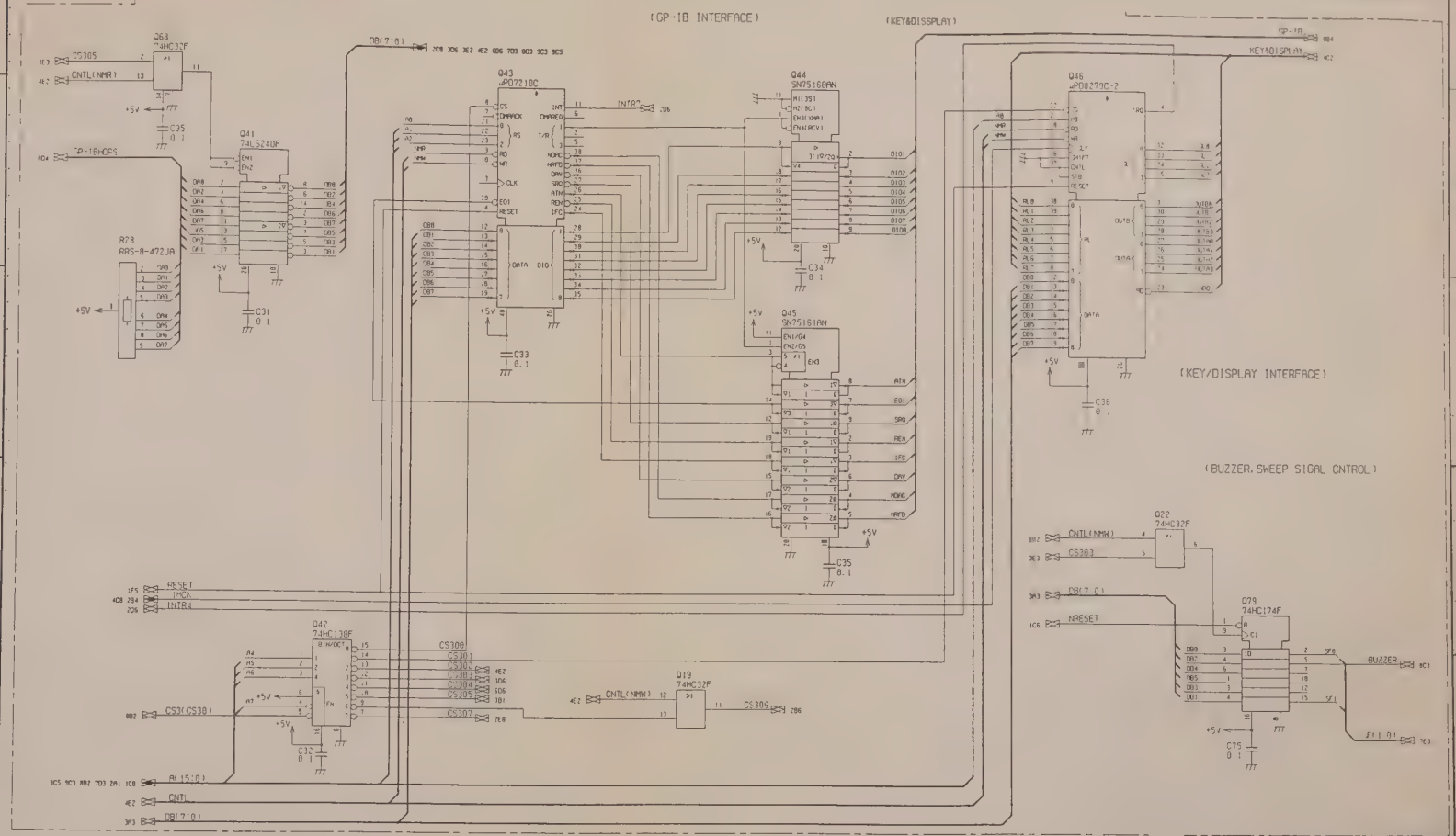

QTY	ITEM	PART No.	DESCRIPTION	MATERIAL	FINISH

CHECKED BY	NAKAZAWA	DRAWN BY	NISIGUTI
APPROVED BY	TODA	DESIGNED BY	TAKAHASI

SCALE :

TITLE: A3 CPU

DRAWING No. 43W35211 3/3

5

DEP

ANRITSU CORP.

43W35211

APPLICATION

REVISIONS

(CLOCK GENERATOR)

(BB SIGNAL GENERATOR)

QTY	ITEM	PART No.	DESCRIPTION	MATERIAL	FINISH

CHECKED BY	NAKAZAWA	DRAWN BY	NISIGUTI
APPROVED BY	TODA	DESIGNED BY	TAKAHASI

SCALE :

TITLE

A3 CPU

DRAWING No.

43W35211

DEP

ANRITSU CORP.

3-113/3-114

APPLICATION

REVISIONS

(GATE TIMING SIGNAL GENERATOR)

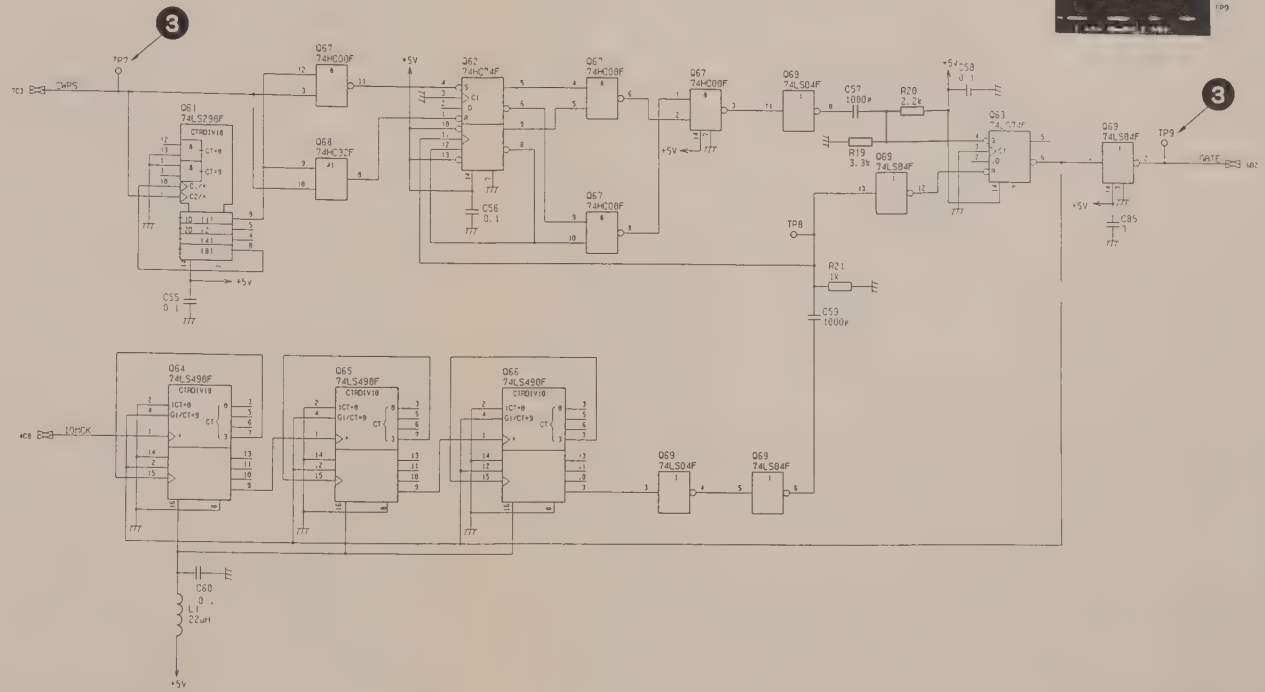

QTY	ITEM	PART No.	DESCRIPTION	MATERIAL	FINISH

CHECKED BY NAKAZAWA	DRAWN BY NISIGUTI	SCALE :	5
APPROVED BY TODA	DESIGNED BY TAKAHASI		
TITLE A3 CPU		DRAWING No. 43W35211 5/9	

DEP

APPLICATION

REVISIONS

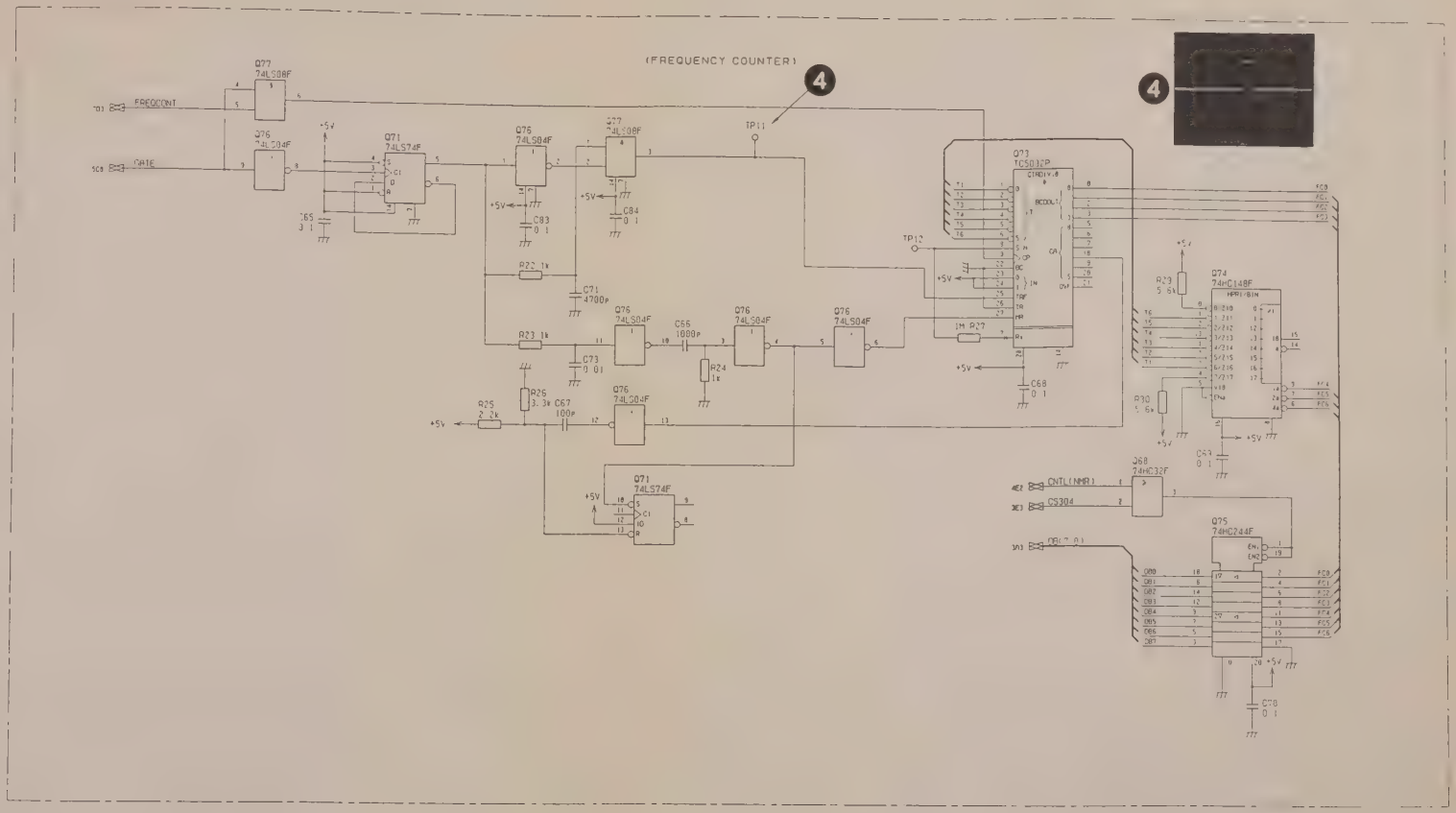

QTY	ITEM	PART No.	DESCRIPTION	MATERIAL	FINISH

CHECKED BY NAKAZAWA	DRAWN BY NISIGUTI	SCALE :	
APPROVED BY TODA	DESIGNED BY TAKAHASI		
TITLE A3 CPU		DRAWING No. 43W35211	6/9

5

DEP

ANRITSU CORP.

APPLICATION

REVISIONS

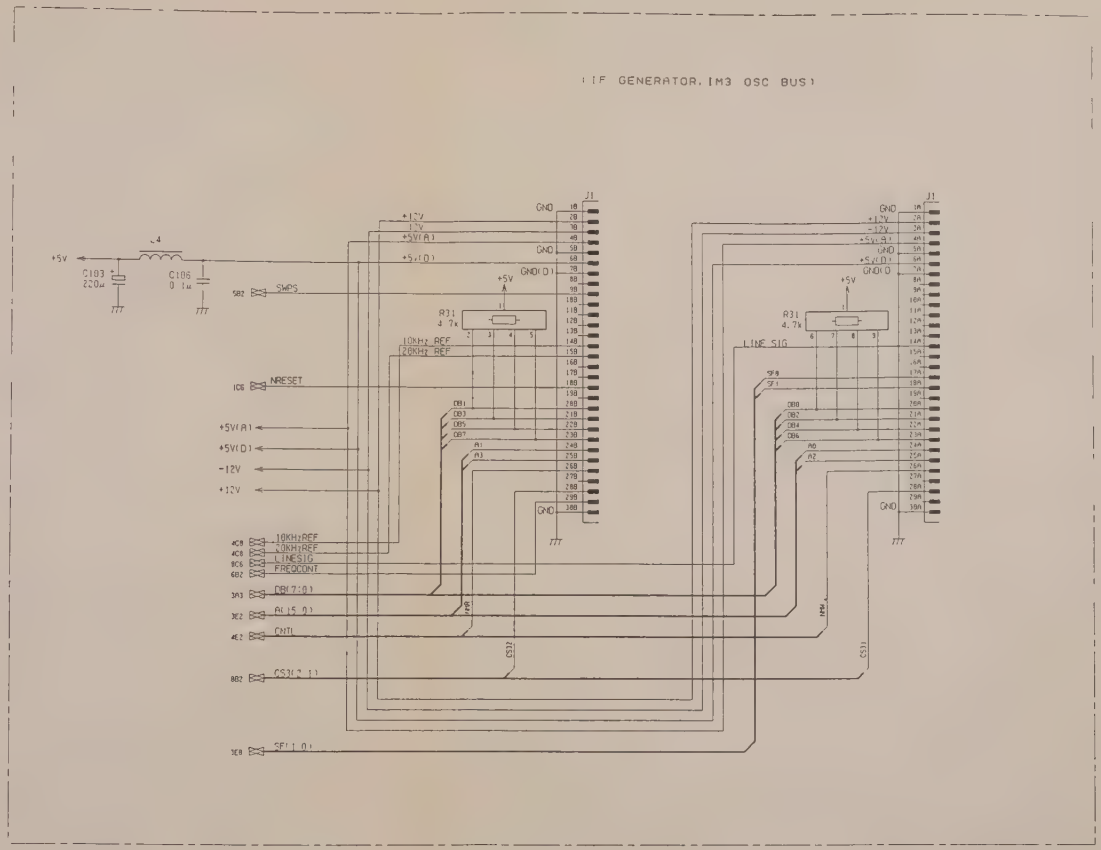

QTY	ITEM	PART No.	DESCRIPTION	MATERIAL	FINISH

CHECKED BY NAKAZAWA	DRAWN BY NISIGUTI	SCALE :	
APPROVED BY TODA	DESIGNED BY TAKAHASI		
TITLE A3 CPU		DRAWING No. 43W35211	7/9

5

DEP

ANRITSU CORP.

APPLICATION

REVISIONS

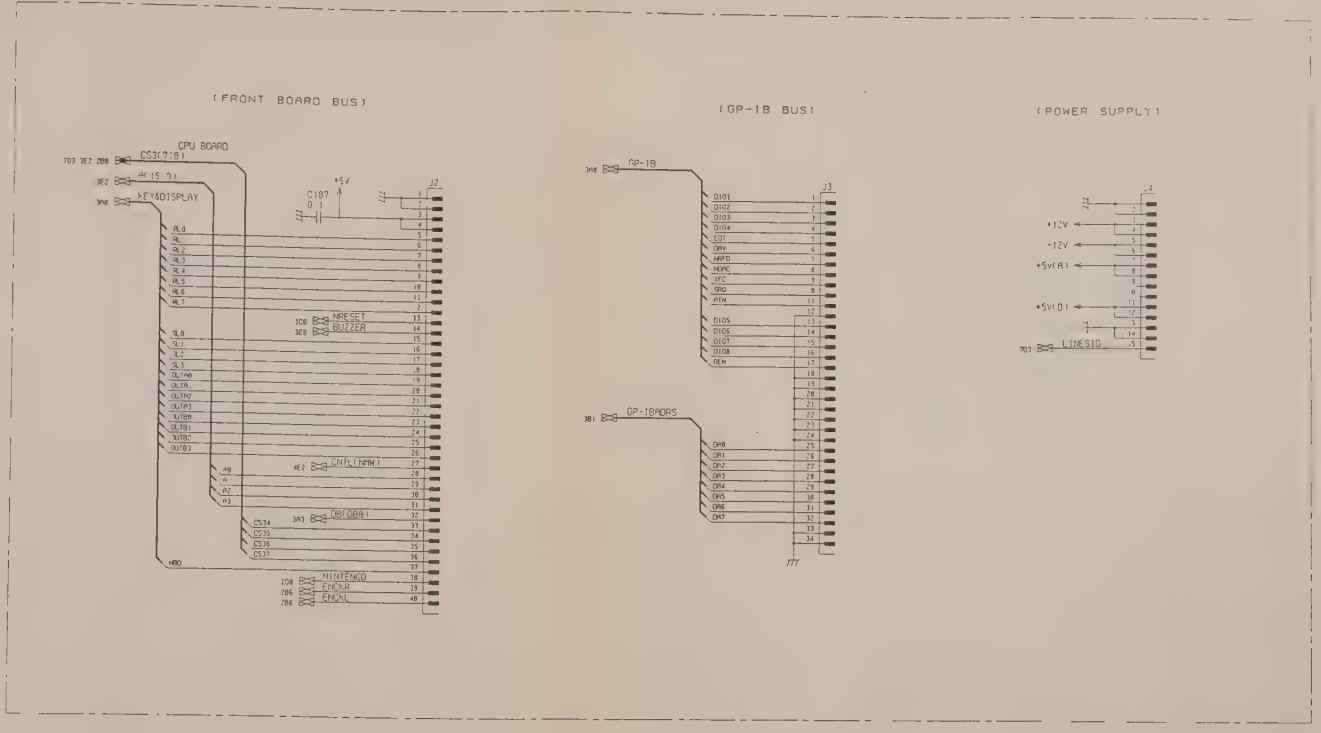

QTY	ITEM	PART No.	DESCRIPTION	MATERIAL	FINISH

CHECKED BY NAKAZAWA	DRAWN BY NISIGUTI	SCALE	
APPROVED BY TODA	DESIGNED BY TAKAHASI		
TITLE A3 CPU		DRAWING No. 43W35211	8/9

5

DEP

APPLICATION

REVISIONS

(RS-232C BUS)

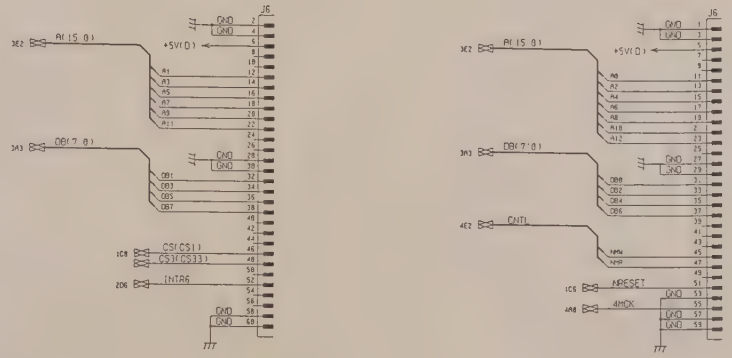

QTY	ITEM	PART No.	DESCRIPTION	MATERIAL	FINISH

CHECKED BY NAKAZAWA	DRAWN BY NISIGUTI	SCALE :	
APPROVED BY TODA	DESIGNED BY TAKAHASI		
TITLE A3 CPU		DRAWING No. 43W35211	9/9

DEP

ANRITSU CORP.

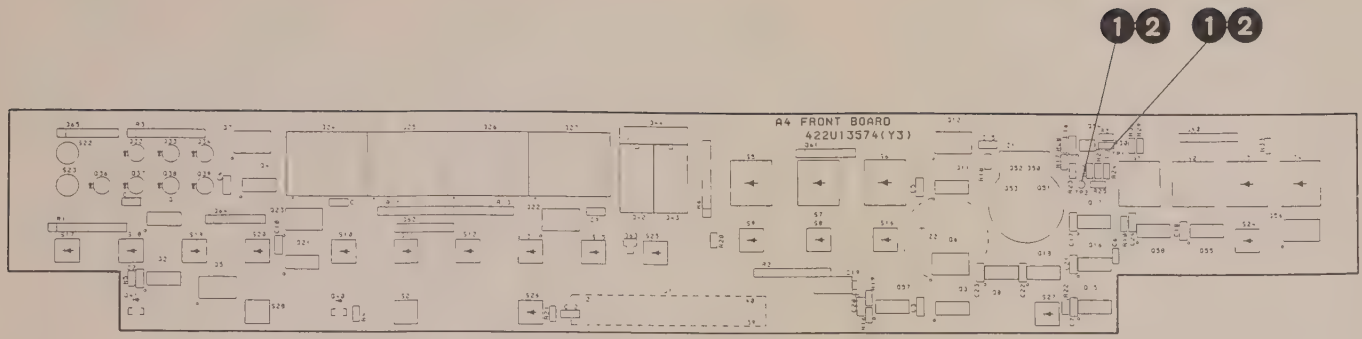

A4 FRONT BOARD PC Board
Parts Layout 6

43W35212

APPLICATION

REVISIONS

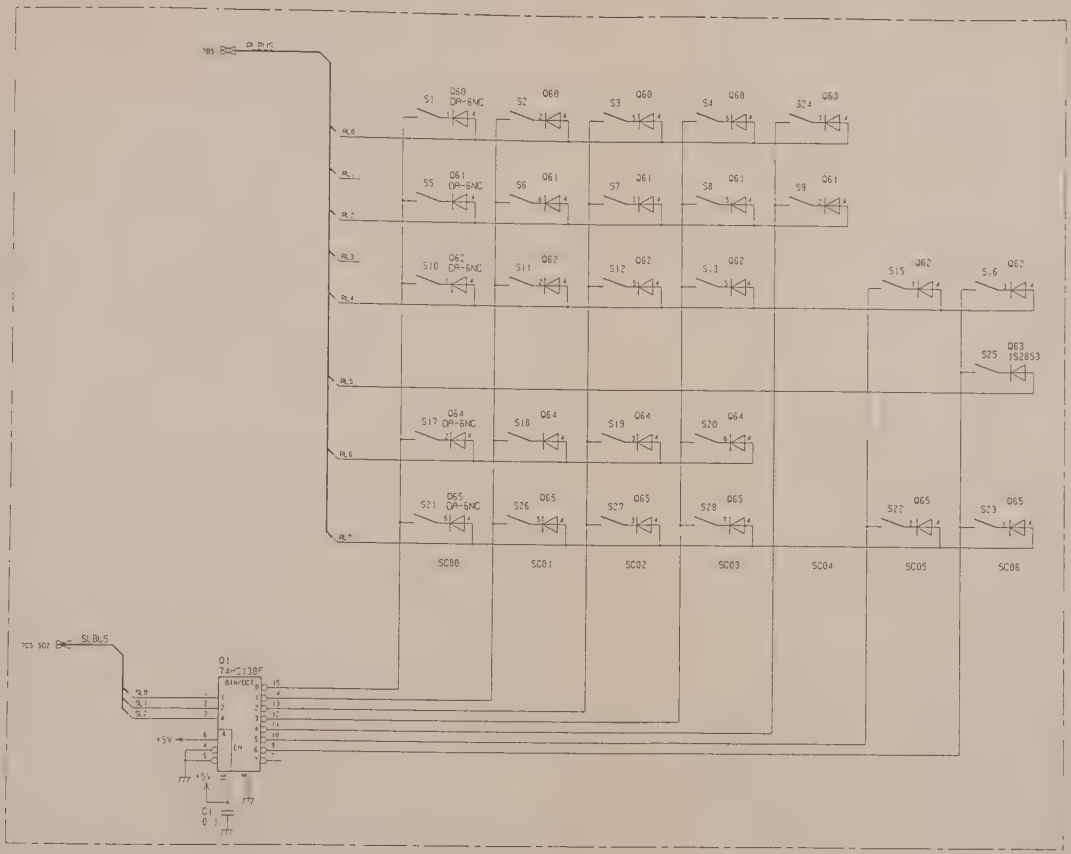

	0	1	2	3	4	5	6
0	<	>	RECALL	SHIFT	ENABLE		
1			*SWP WIDTH				
2	CENTER FREQ	OUTPUT LEVEL		AMPL SLOPE	FM DEV		
3							
4	F1	F2	F3	F4		F1/F2	SWP TIME
5							F3 (SWEEP)
6	FAR END	TRIG	CW	SWEEP			
7	LOCAL	PANEL LOCK	RF OUTPUT ON OFF	PRE SET		FM FREQ	SWP FREQ

QTY	ITEM	PART No.	DESCRIPTION	MATERIAL	FINISH

CHECKED BY	NAKAZAWA	DRAWN BY	NISIGUTI
APPROVED BY	TODA	DESIGNED BY	TAKAHASI

SCALE

TITLE: A4 FRONT BOARD

DRAWING No. 43W35212

PARTS LIST 44W86736

DEP

ANRITSU CORP.

APPLICATION

REVISIONS

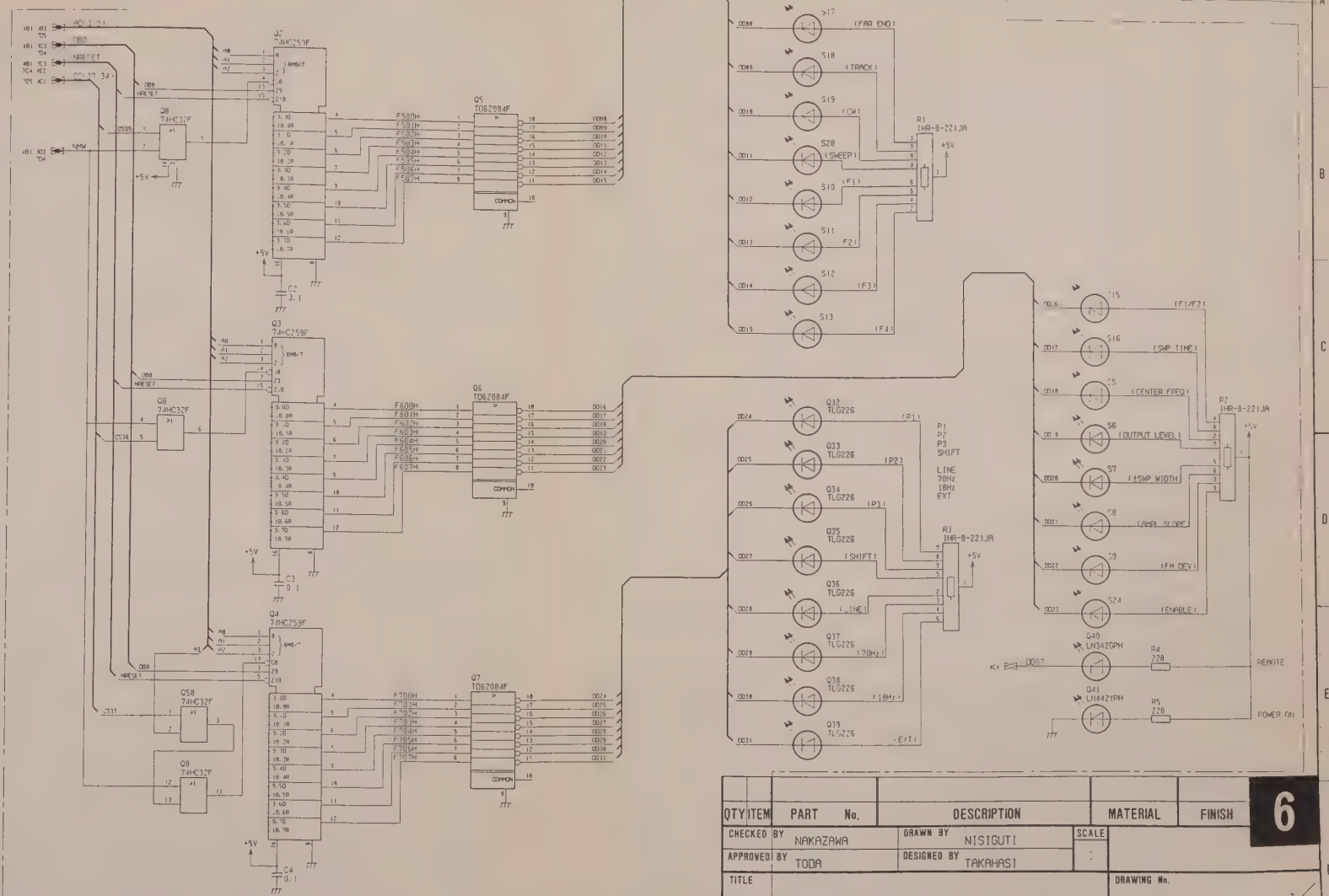

QTY	ITEM	PART No.	DESCRIPTION	MATERIAL	FINISH

CHECKED BY NAKAZAWA	DRAWN BY NISIGUTI	SCALE :	
APPROVED BY TODA	DESIGNED BY TAKAHASI		

TITLE: A4 FRONT BOARD

DRAWING No. 43W35212 2/2

DEP

ANRITSU CORP.

APPLICATION

REVISIONS

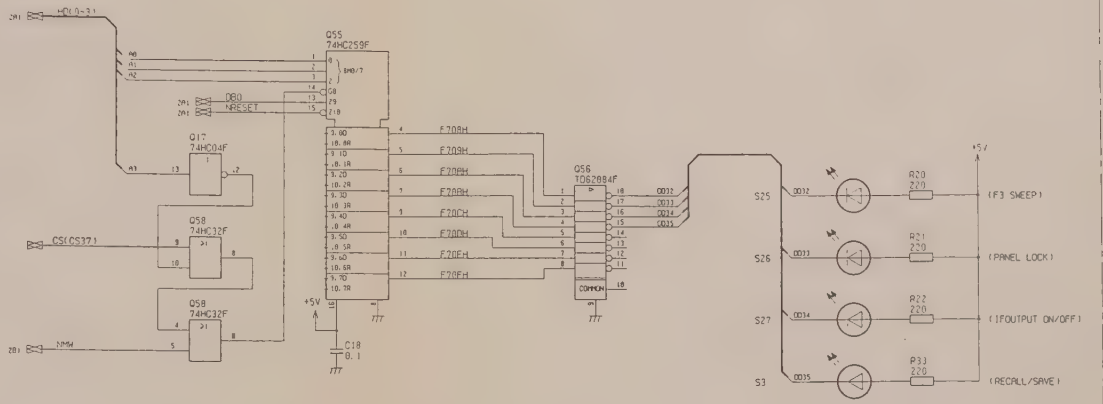

QTY	ITEM	PART No.	DESCRIPTION	MATERIAL	FINISH

CHECKED BY NAKAZAWA	DRAWN BY NISIGUTI	SCALE :	
APPROVED BY TODA	DESIGNED BY TAKAHASI		
TITLE A4 FRONT BOARD		DRAWING No. 43W35212	3/7

DEP

ANRITSU CORP.

APPLICATION

REVISIONS

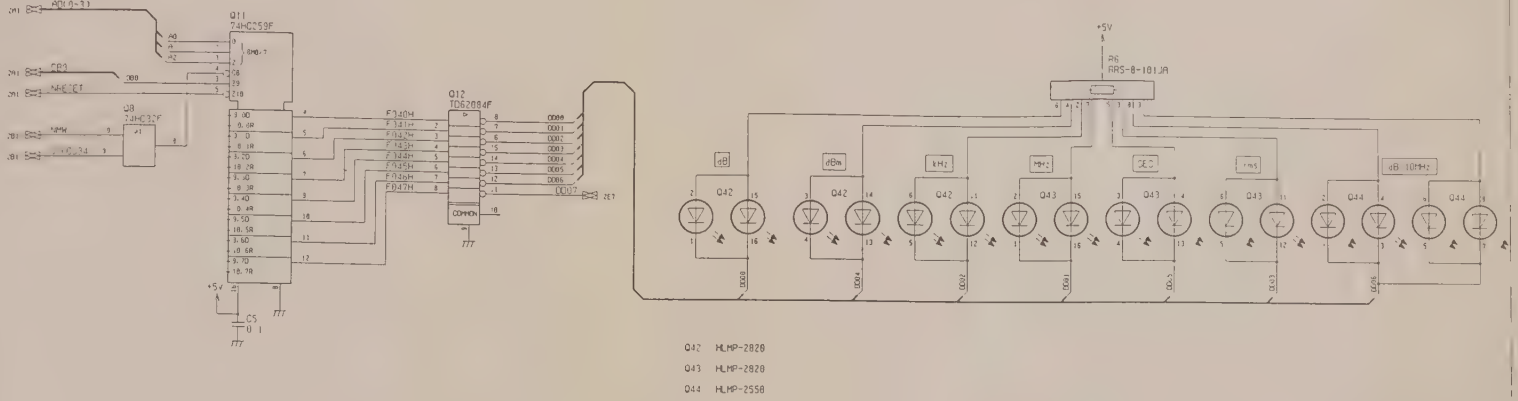

Q42 HLMP-2820
Q43 HLMP-2820
Q44 HLMP-2550

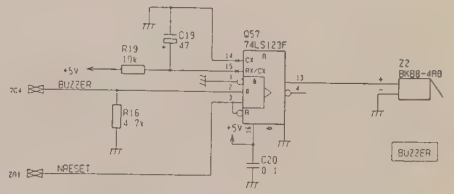

QTY	ITEM	PART No.	DESCRIPTION	MATERIAL	FINISH

CHECKED BY NAKAZAWA	DRAWN BY NISIGUTI	SCALE :	
APPROVED BY TODA	DESIGNED BY TAKAHASI		
TITLE A4 FRONT BOARD		DRAWING No. 43W35212	4/7

6

DEP

ANRITSU CORP.

APPLICATION

REVISIONS

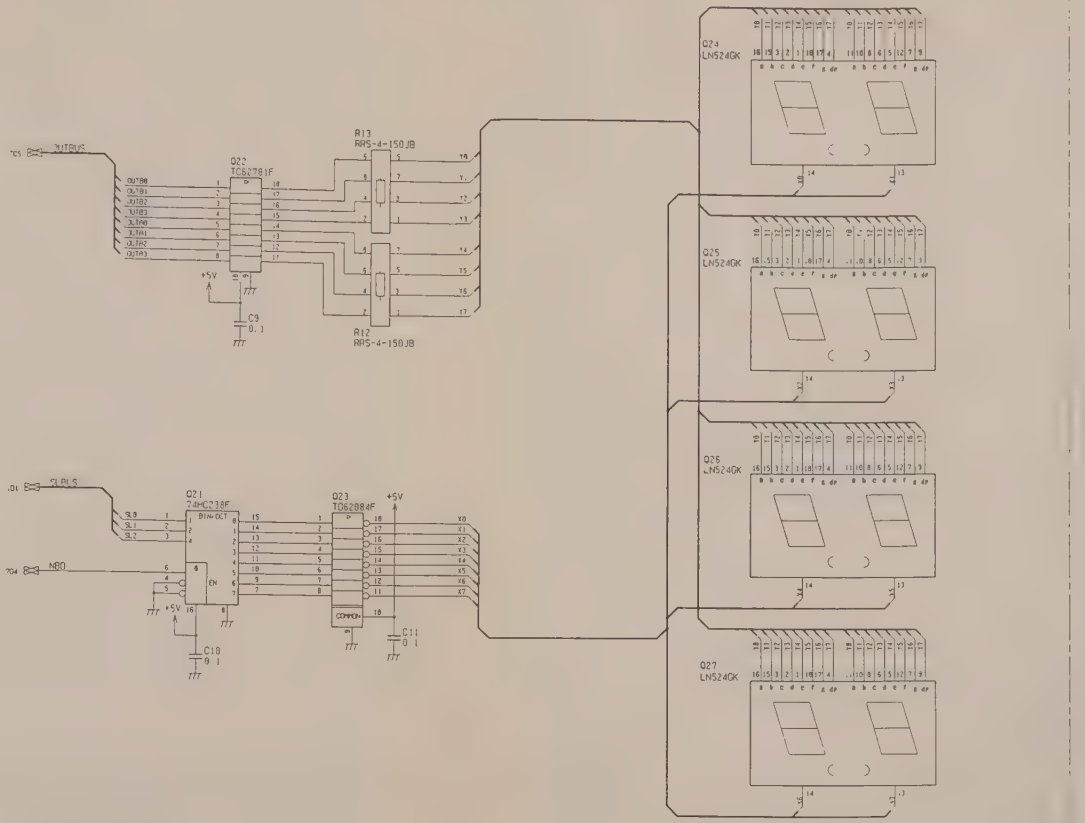

QTY	ITEM	PART No.	DESCRIPTION	MATERIAL	FINISH

CHECKED BY NAKAZAWA	DRAWN BY NISIGUTI	SCALE	
APPROVED BY TODA	DESIGNED BY TAKAHASI		
TITLE A4 FRONT BOARD		DRAWING No. 43W35212	5/7

6

DEP

ANRITSU CORP.

APPLICATION

REVISIONS

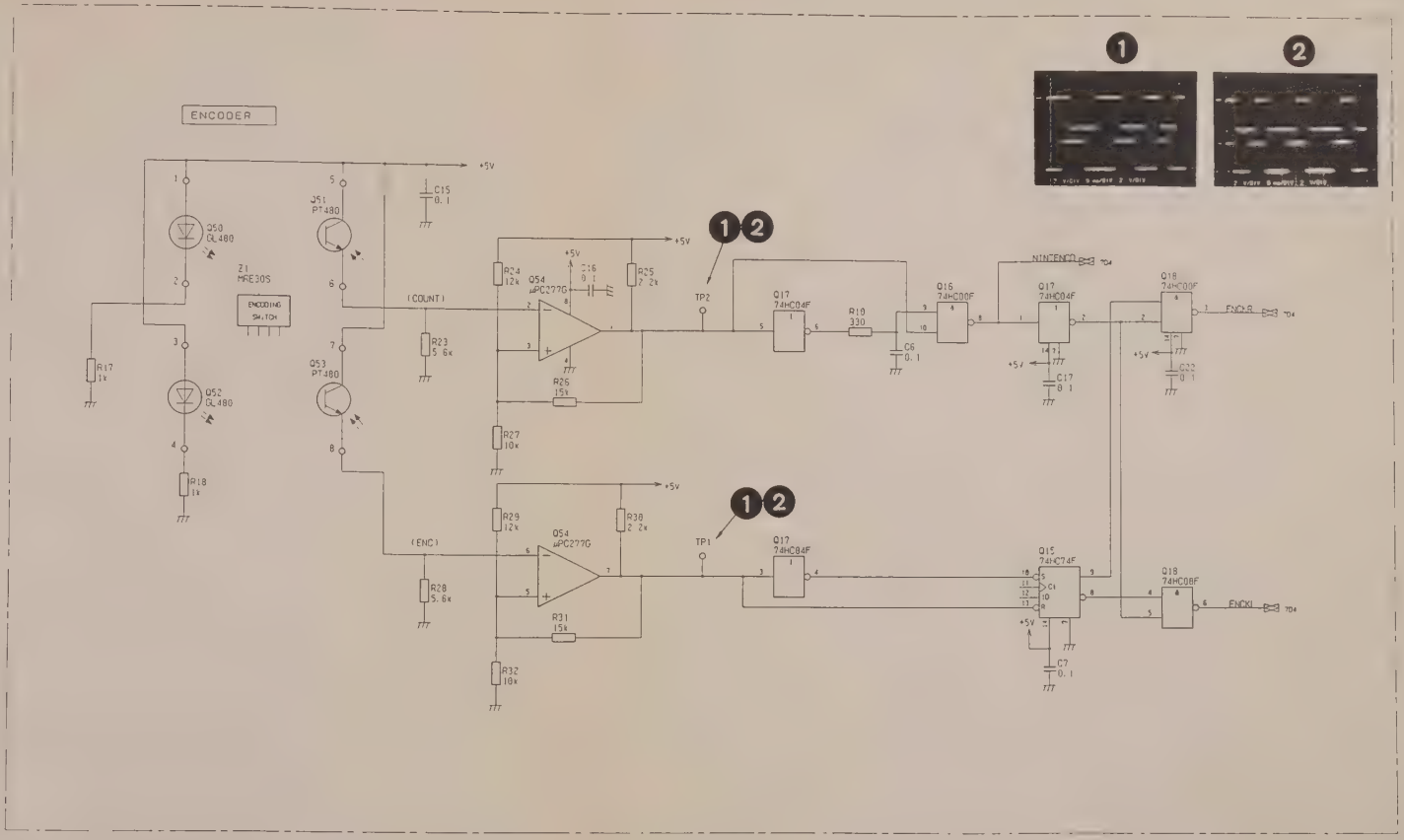

QTY	ITEM	PART No.	DESCRIPTION	MATERIAL	FINISH

CHECKED BY NAKAZAWA	DRAWN BY NISIGUTI	SCALE :	
APPROVED BY TODA	DESIGNED BY TAKAHASI		
TITLE A4 FRONT BOARD		DRAWING No. 43W35212	6/7

6

DEP

43W35212

APPLICATION

REVISIONS

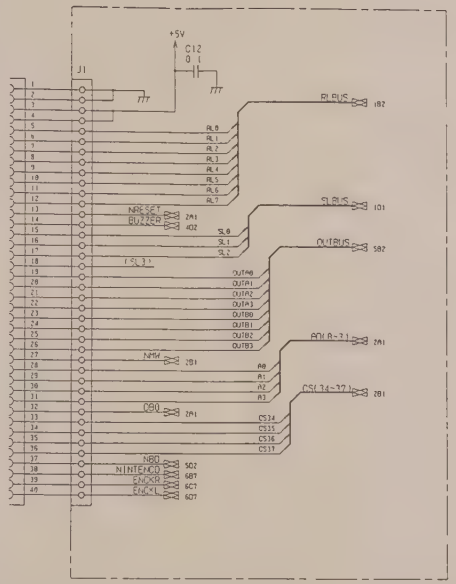

QTY	ITEM	PART No.	DESCRIPTION	MATERIAL	FINISH

CHECKED BY NAKAZAWA	DRAWN BY NISIGUTI	SCALE :
APPROVED BY TODA	DESIGNED BY TAKAHASI	
TITLE A4 FRONT BOARD		DRAWING No. 43W35212 7/7

6

DEP

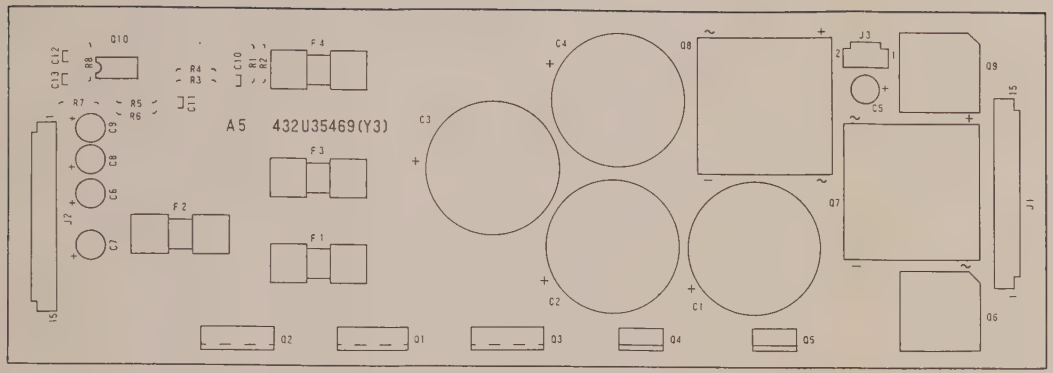

A5 POWER SUPPLY PC Board
Parts Layout **7**

43W35213

APPLICATION

REVISIONS

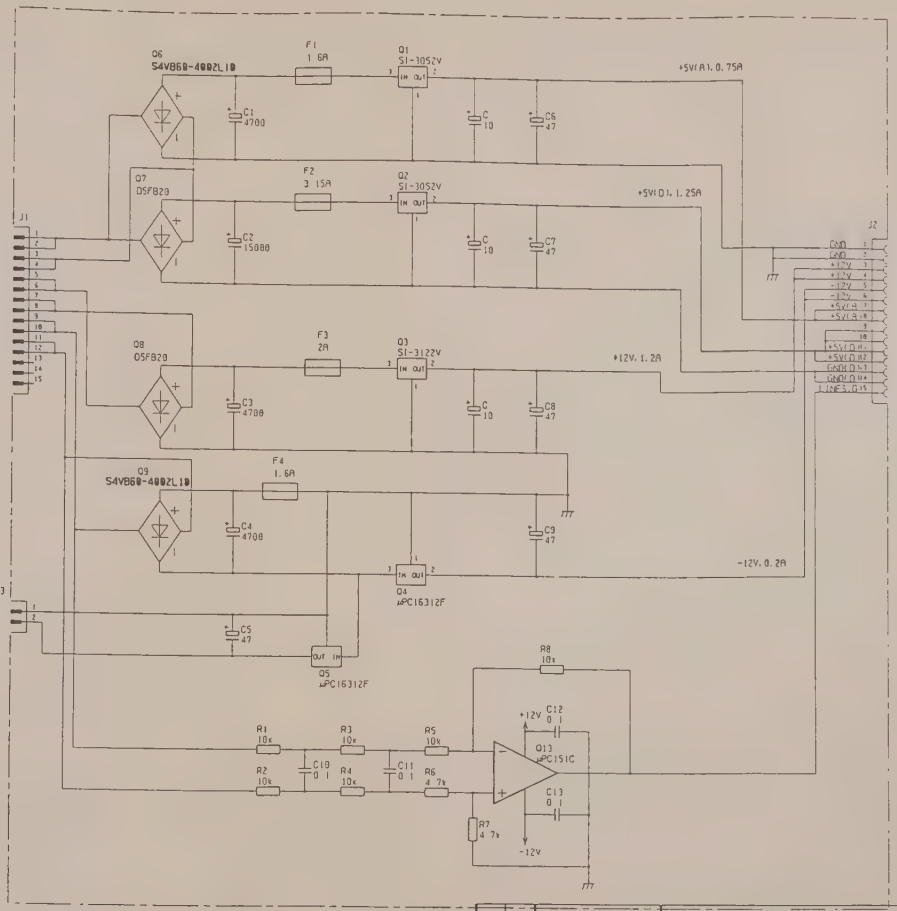

QTY	ITEM	PART No.	DESCRIPTION	MATERIAL	FINISH

CHECKED BY NAKAZAWA	DRAWN BY NISIGUTI	SCALE	
APPROVED BY TODA	DESIGNED BY TAKAHASI		
TITLE: A5 POWER SUPPLY		DRAWING No. 43W35213	1/1

DEP

PARTS LIST | 44W86737

ANRITSU CORP.

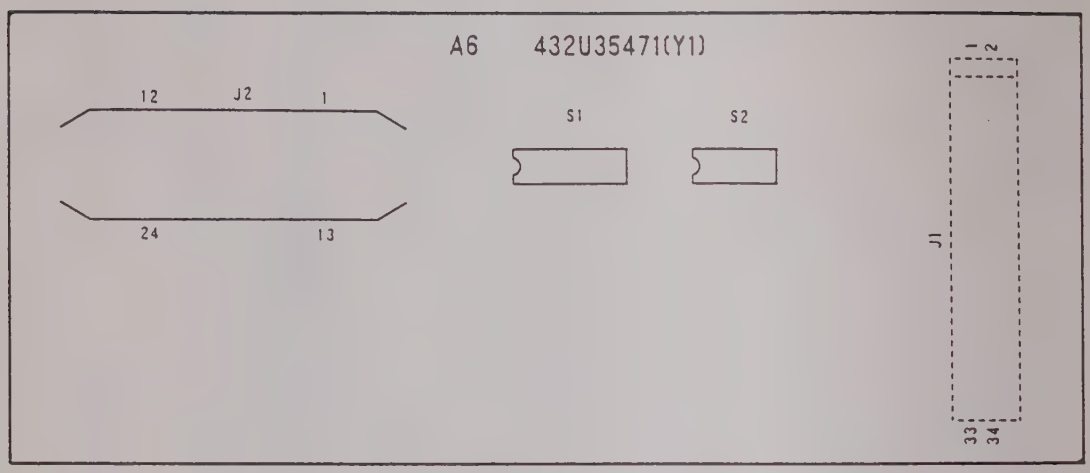

A6 GP-IB CONNECTOR BOARD PC Board Parts Layout 8

43W35214

APPLICATION

REVISIONS

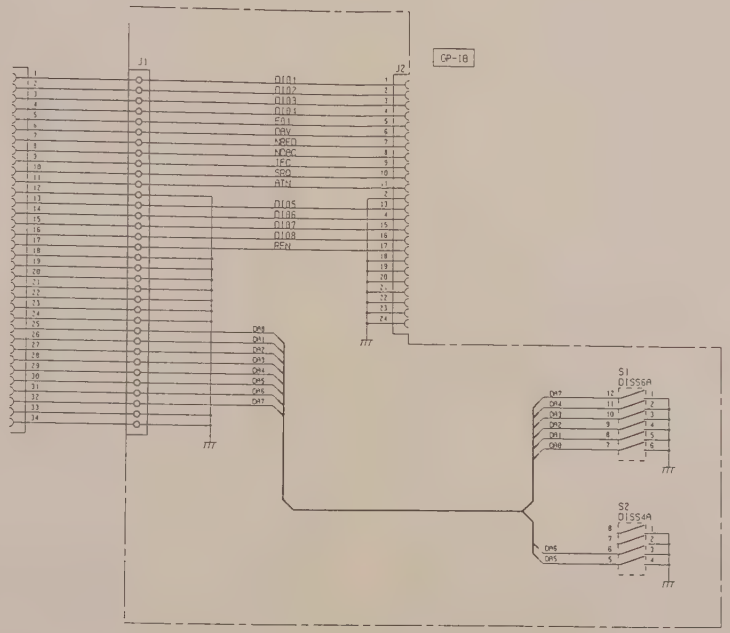

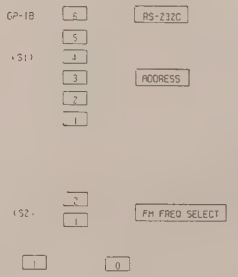

QTY	ITEM	PART No.	DESCRIPTION	MATERIAL	FINISH

8

CHECKED BY NAKAZAWA	DRAWN BY IWASAWA	SCALE :	
APPROVED BY TODA	DESIGNED BY NAKAMURA		

DEP

PARTS LIST 44W86738

TITLE

A6 GP-IB CONNECTOR BOARD

DRAWING No

43W35214

1/1

ANRITSU CORP.

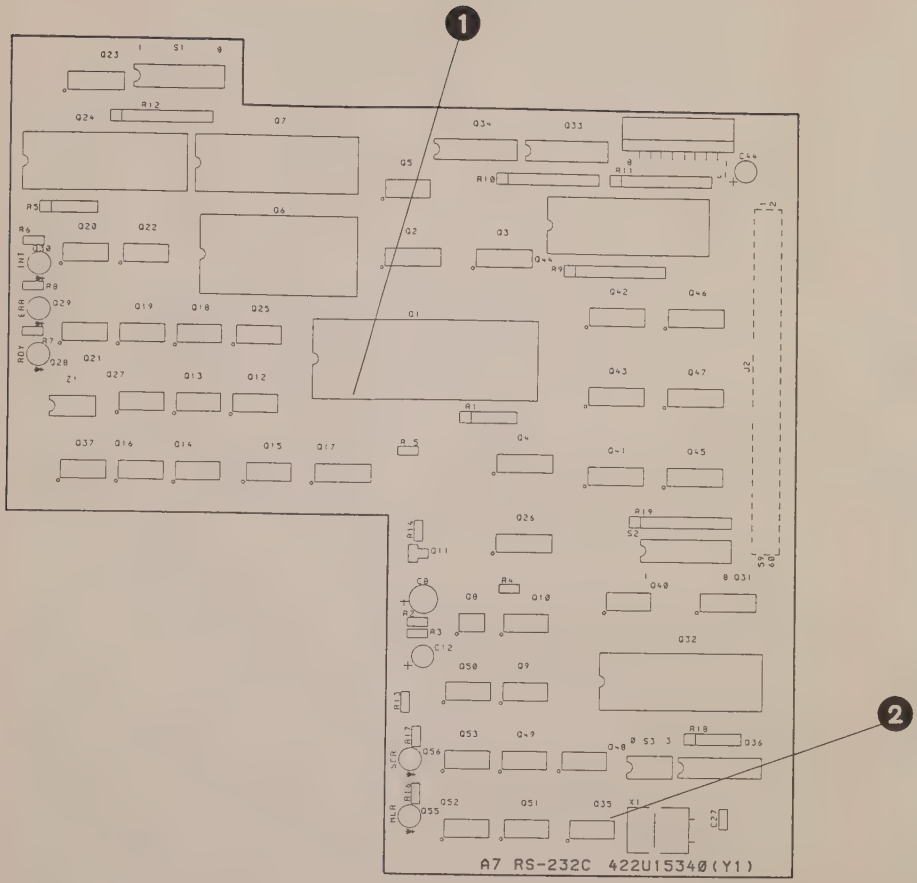

A7 RS-232C BOARD
PC Board
Parts Layout **9** (1)

A7 RS-232C BOARD
PC Board
Parts Layout 9 (2)

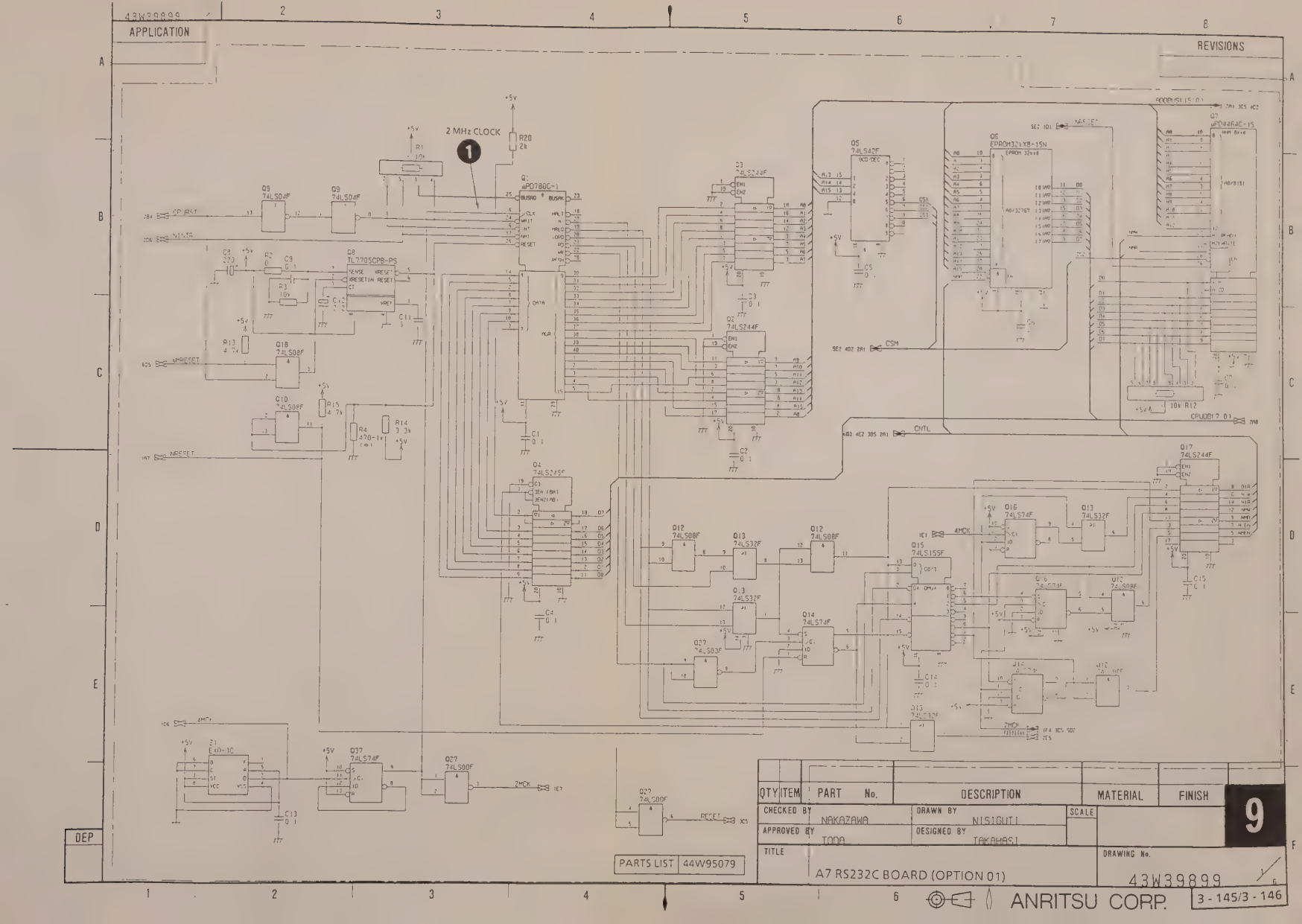
43W39899
APPLICATION
REVISIONS
2 MHz CLOCK
1
PARTS LIST 44W95079
QTY ITEM PART No. DESCRIPTION MATERIAL FINISH
CHECKED BY NAKAZAWA
DRAWN BY NISIGUTI
APPROVED BY TODA
DESIGNED BY TAKAHASI
SCALE
TITLE
A7 RS232C BOARD (OPTION 01)
DRAWING No.
43W39899
9
DEP
ANRITSU CORP.
3 - 145/3 - 146

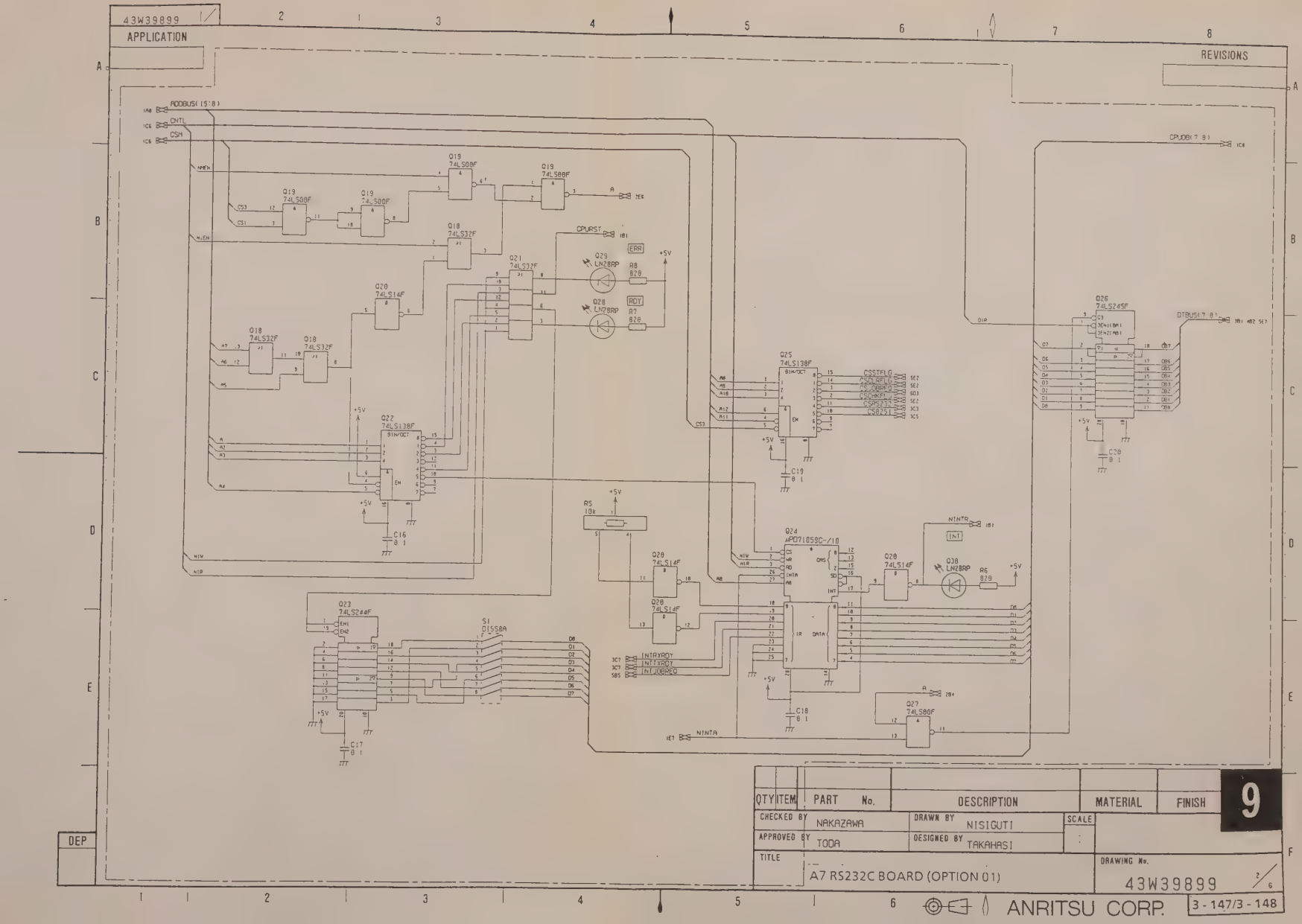
43W39899
APPLICATION
REVISIONS
PODBUS(15:0)
CNTL
CSM
CPUDB(7:0)
DTBUS(7:0)
Q19 74LS00F
Q18 74LS32F
Q20 74LS14F
Q21 74LS32F
Q22 74LS138F
Q23 74LS244F
Q24 μPD7105 9C-/10
Q25 74LS138F
Q26 74LS245F
Q27 74LS00F
Q28 74LS14F
Q29 LN28RP
Q30 LN28RP
Q38 LN28RP
R5 10k
R6 820
R7 820
R8 820
S1 DIS8A
CPURST
ERR
RDY
INT
NINTR
NINTA
INTRXRDY
INTTXRDY
INTJOBRED
CSSTFLG
CSCLRFLG
CSJOBRED
CSCHKFLG
CSRS232
CS8251
+5V
C16 0.1
C17 0.1
C18 0.1
C19 0.1
C20 0.1
DEP
QTY ITEM PART No. DESCRIPTION MATERIAL FINISH
9
CHECKED BY NAKAZAWA
DRAWN BY NISIGUTI
SCALE
APPROVED BY TODA
DESIGNED BY TAKAHASI
TITLE
A7 RS232C BOARD (OPTION 01)
DRAWING No.
43W39899
2/6
ANRITSU CORP.
3-147/3-148

43W39899

APPLICATION

REVISIONS

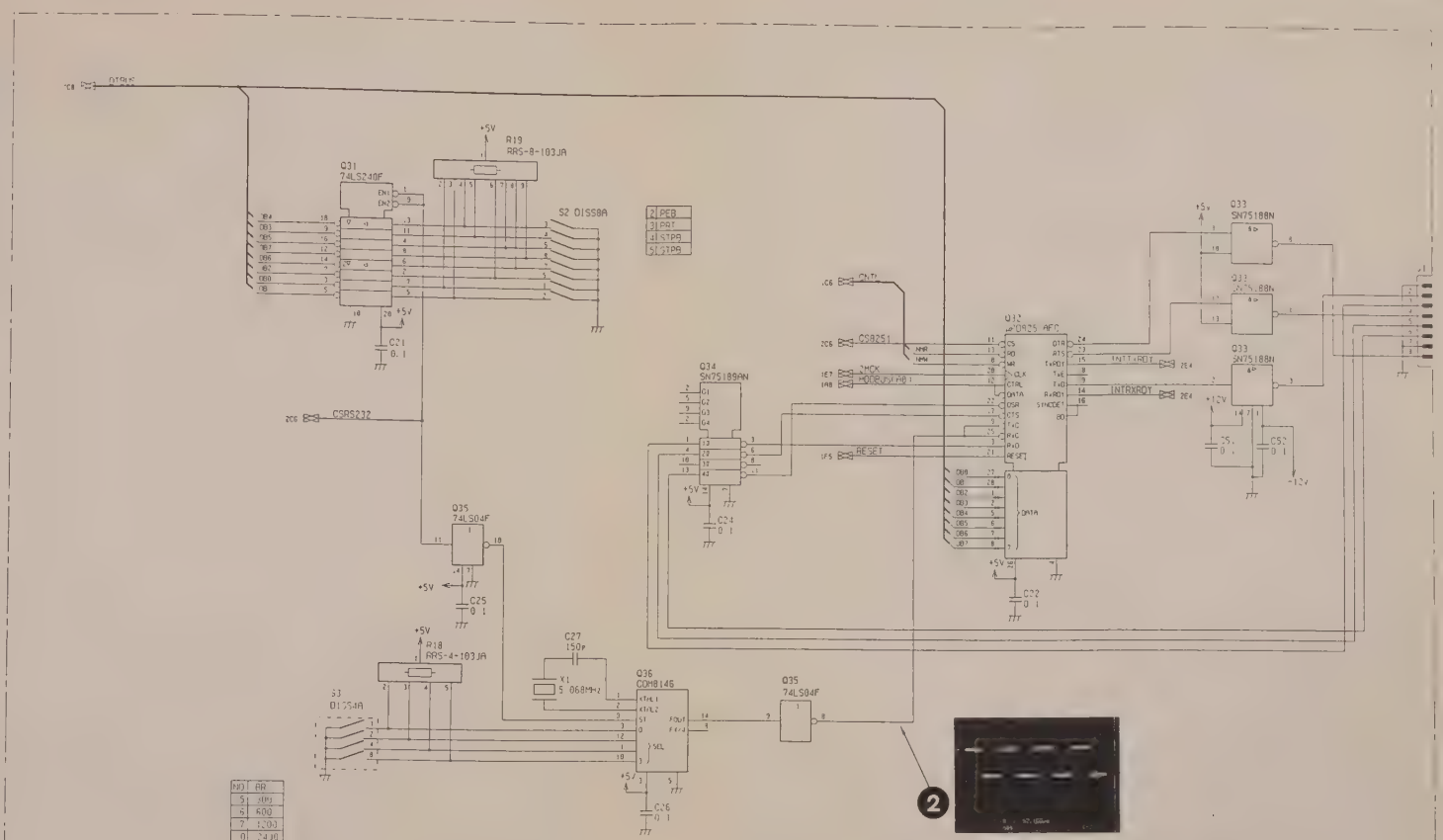

QTY	ITEM	PART No.	DESCRIPTION	MATERIAL	FINISH

CHECKED BY NAKAZAWA	DRAWN BY NISIGUTI	SCALE	
APPROVED BY TODA	DESIGNED BY TAKAHASI		

TITLE: A7 RS232C BOARD (OPTION 01)

DRAWING No. 43W39899 3/6

DEP

9

ANRITSU CORP.

APPLICATION

REVISIONS

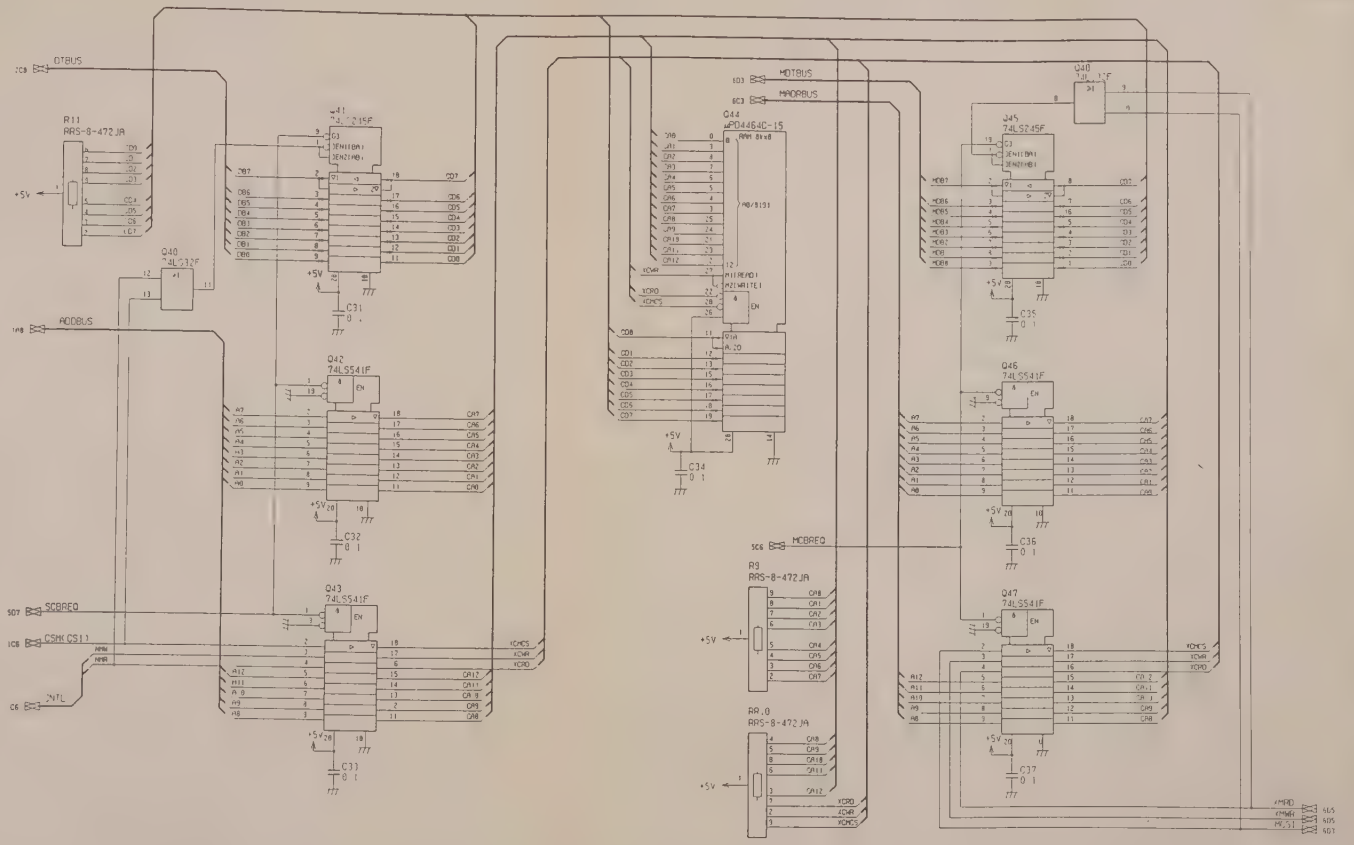

QTY	ITEM	PART No.	DESCRIPTION	MATERIAL	FINISH

CHECKED BY	NAKAZAWA	DRAWN BY	NISIGUTI
APPROVED BY	TODA	DESIGNED BY	TAKAHASI

SCALE

TITLE: A7 RS232C BOARD (OPTION 01)

DRAWING No: 43W39899 4/6

DEP

9

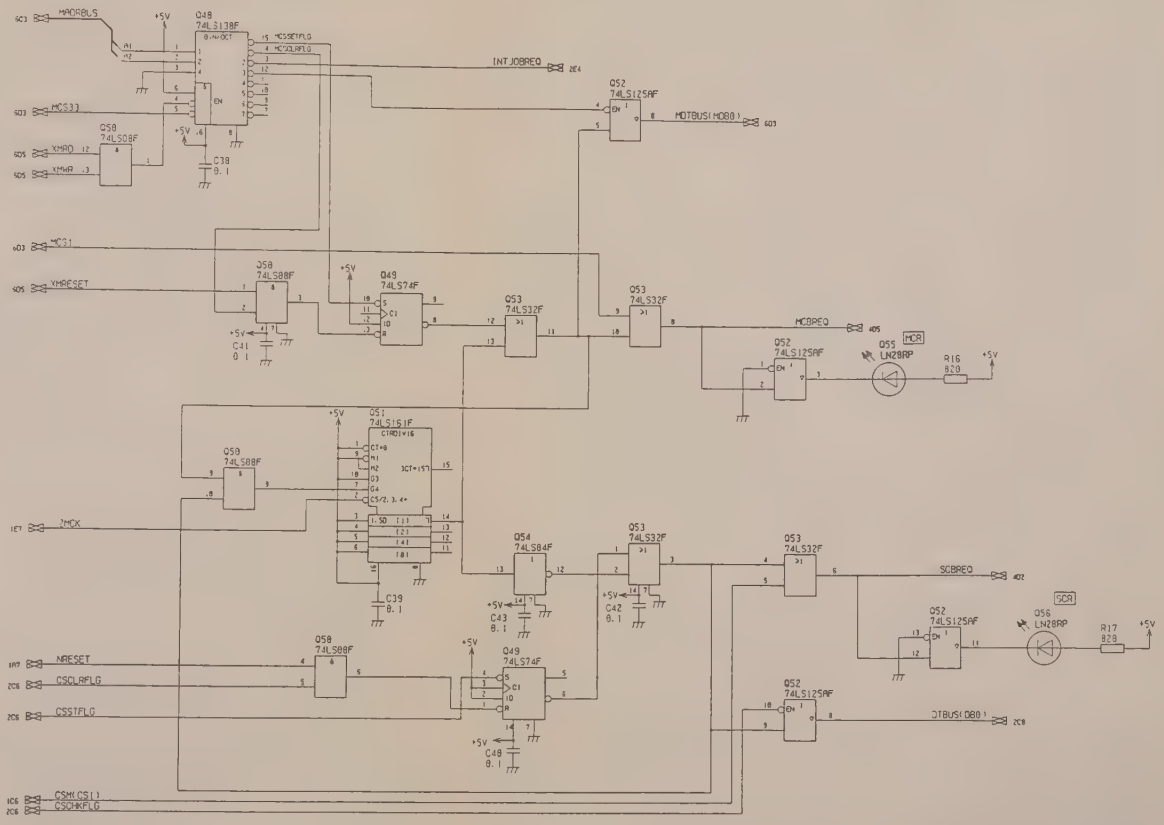

QTY	ITEM	PART No.	DESCRIPTION	MATERIAL	FINISH

CHECKED BY NAKAZAWA	DRAWN BY NISIGUTI	SCALE :	
APPROVED BY TODA	DESIGNED BY TAKAHASI		

TITLE
. A7 RS232C BOARD (OPTION 01)

DRAWING No.
43W39899 5/6

DEP

43W39899

APPLICATION

REVISIONS

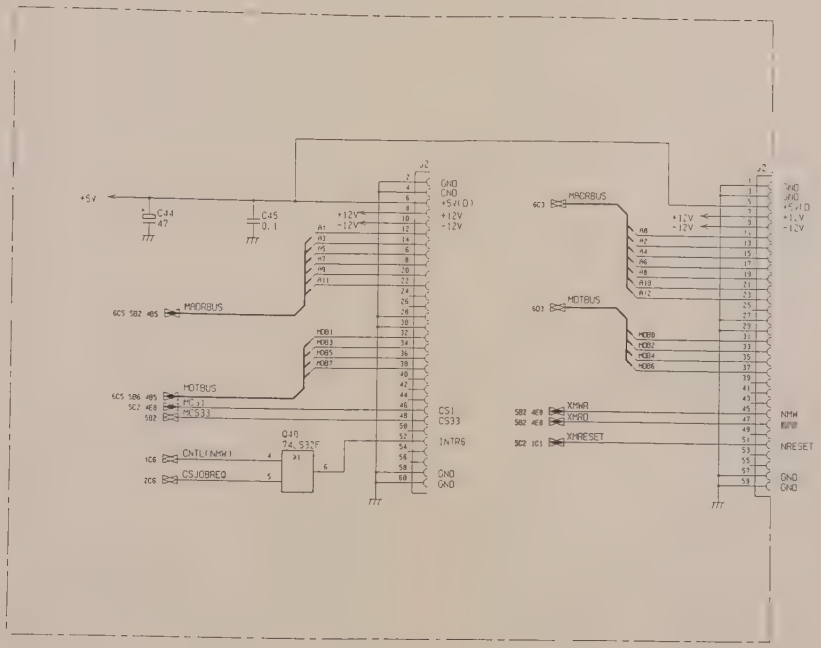

QTY	ITEM	PART No.	DESCRIPTION	MATERIAL	FINISH

CHECKED BY NAKAZAWA	DRAWN BY NISIGUTI	SCALE
APPROVED BY TODA	DESIGNED BY TAKAHASI	

TITLE: A7 RS232C BOARD (OPTION 01)

DRAWING No. 43W39899 6/6

9

DEP

ANRITSU CORP.

APPLICATION

REVISIONS

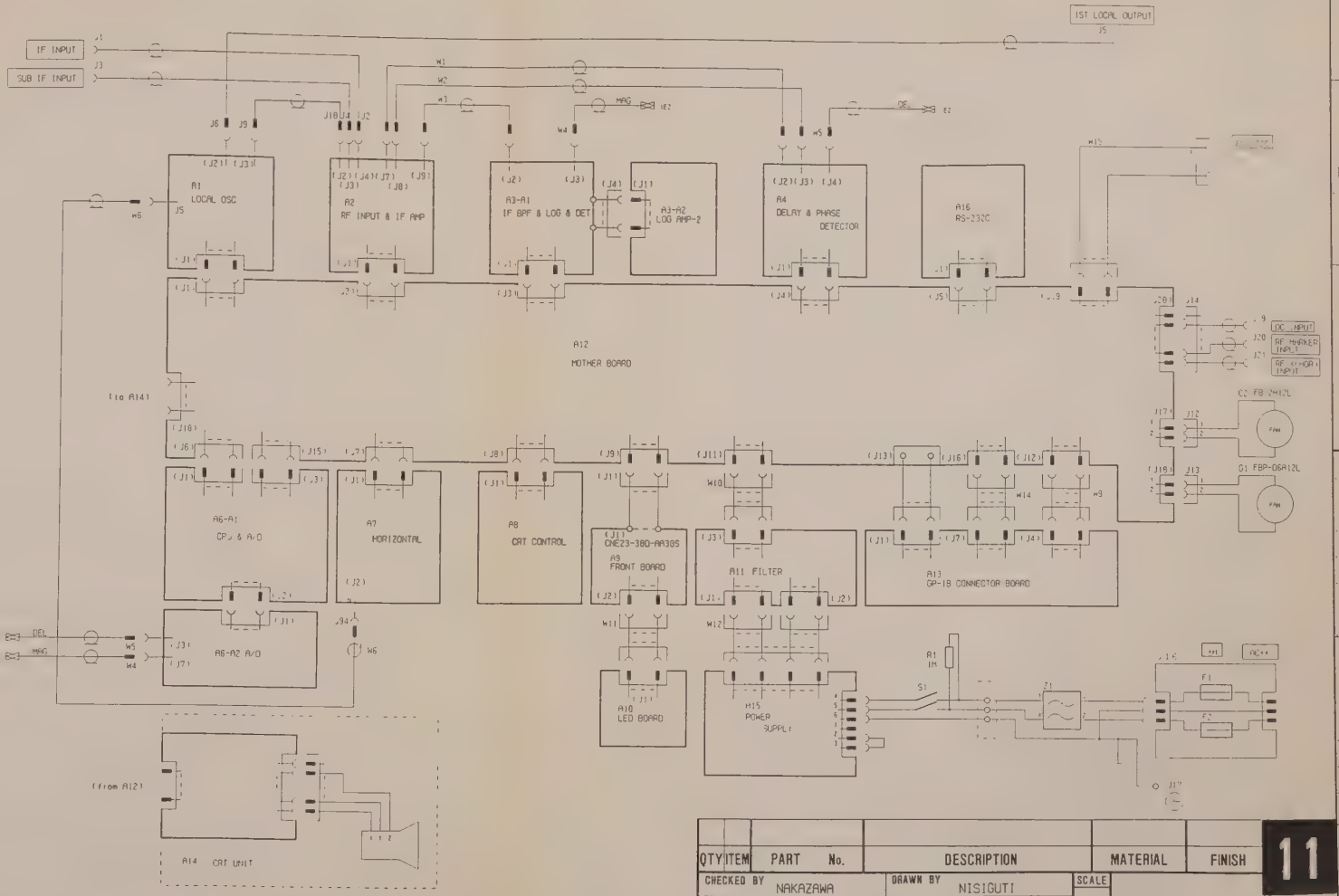

QTY	ITEM	PART No.	DESCRIPTION	MATERIAL	FINISH

CHECKED BY	NAKAZAWA	DRAWN BY	NISIGUTI
APPROVED BY	TODA	DESIGNED BY	NAKAMURA

SCALE :

TITLE ME4510B RECEIVER OVERALL

DRAWING No. 43W35215

PARTS LIST 44W86740

DEP

11

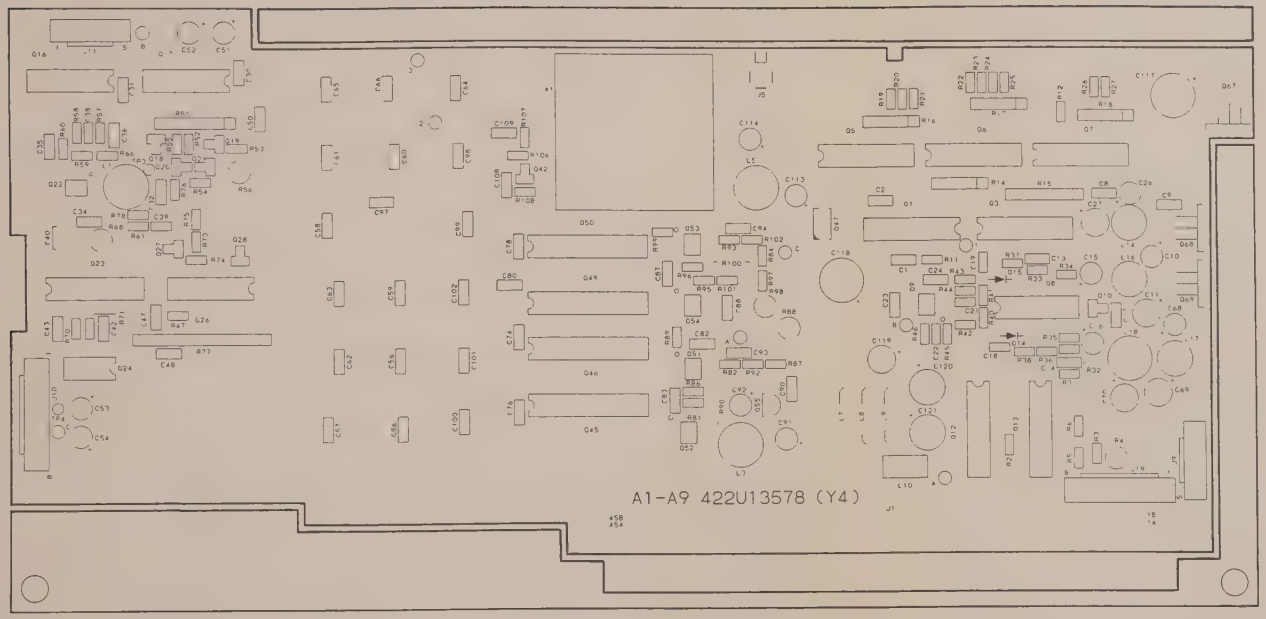

A1-A9 CONTROL
PC Board Parts Layout **13** **(1)**

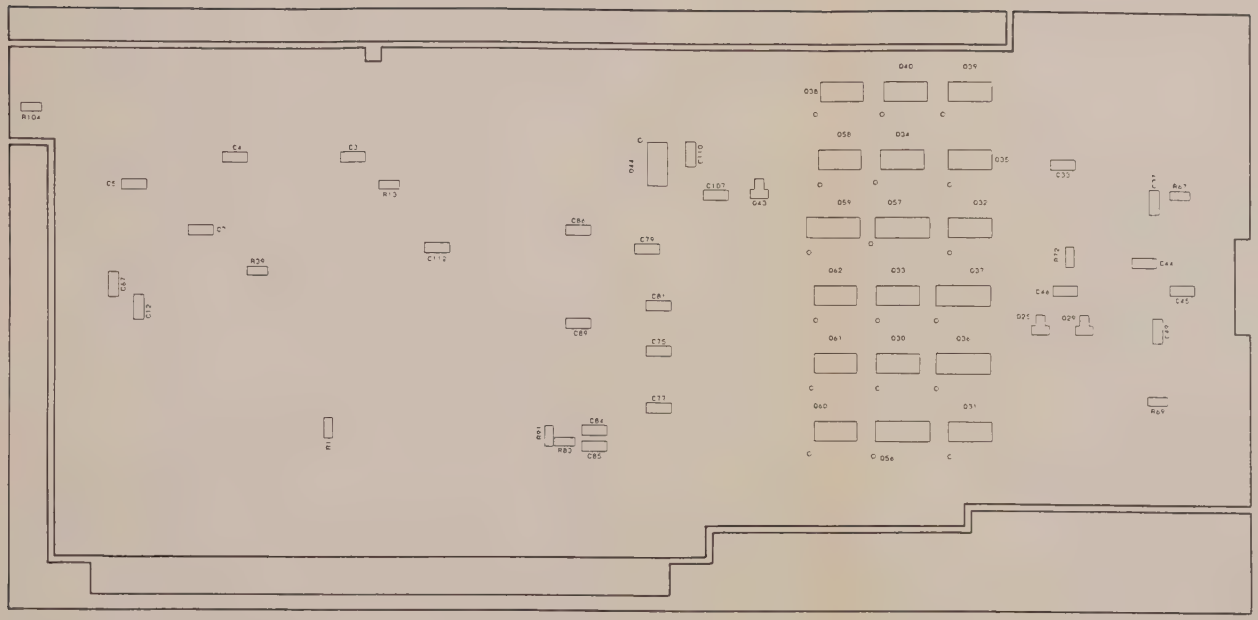

A1-A9 CONTROL
PC Board Parts Layout 13 (2)

43W35216

APPLICATION

REVISIONS

(MAIN VCO)

A1 VCO-1

A2 Local AMP

A3 PLL-1

PARTS LIST	44W87141	A1-A1
	44W87142	A1-A2

QTY	ITEM	PART No.	DESCRIPTION	MATERIAL	FINISH

13

CHECKED BY NAKAZAWA	DRAWN BY NISIGUTI	SCALE :	
APPROVED BY TODA	DESIGNED BY NAKAMURA		
TITLE A1 LOCAL		DRAWING No. 43W35216	

DEP

ANRITSU CORP.

43W35216

APPLICATION

REVISIONS

(MAIN AFC)

A3 AFC-1

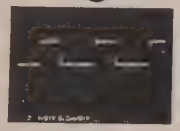

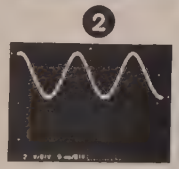

QTY	ITEM	PART No.	DESCRIPTION	MATERIAL	FINISH

CHECKED BY NAKAZAWA	DRAWN BY NISIGUTI	SCALE	13
APPROVED BY TODA	DESIGNED BY NAKAMURA		
TITLE: A1 LOCAL		DRAWING No. 43W35216	2/15

PARTS LIST 44W87143 A1-A3

DEP

ANRITSU CORP.

3-167/3-168

APPLICATION

REVISIONS

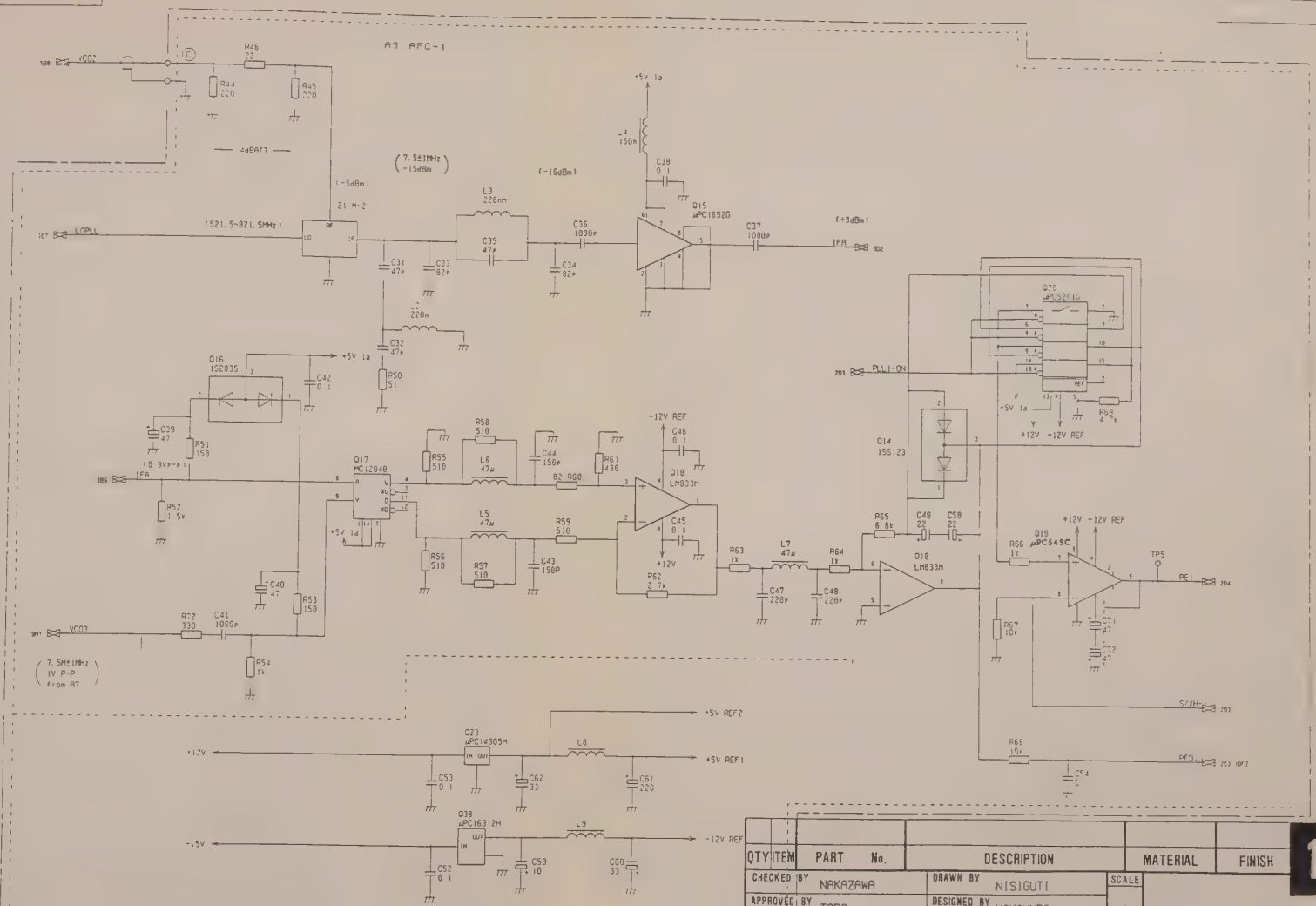

QTY	ITEM	PART No.	DESCRIPTION	MATERIAL	FINISH

CHECKED BY NAKAZAWA	DRAWN BY NISIGUTI	SCALE	
APPROVED BY TODA	DESIGNED BY NAKAMURA		
TITLE A1 LOCAL		DRAWING No. 43W35216	3/15

13

DEP

ANRITSU CORP.

43W35216

APPLICATION

REVISIONS

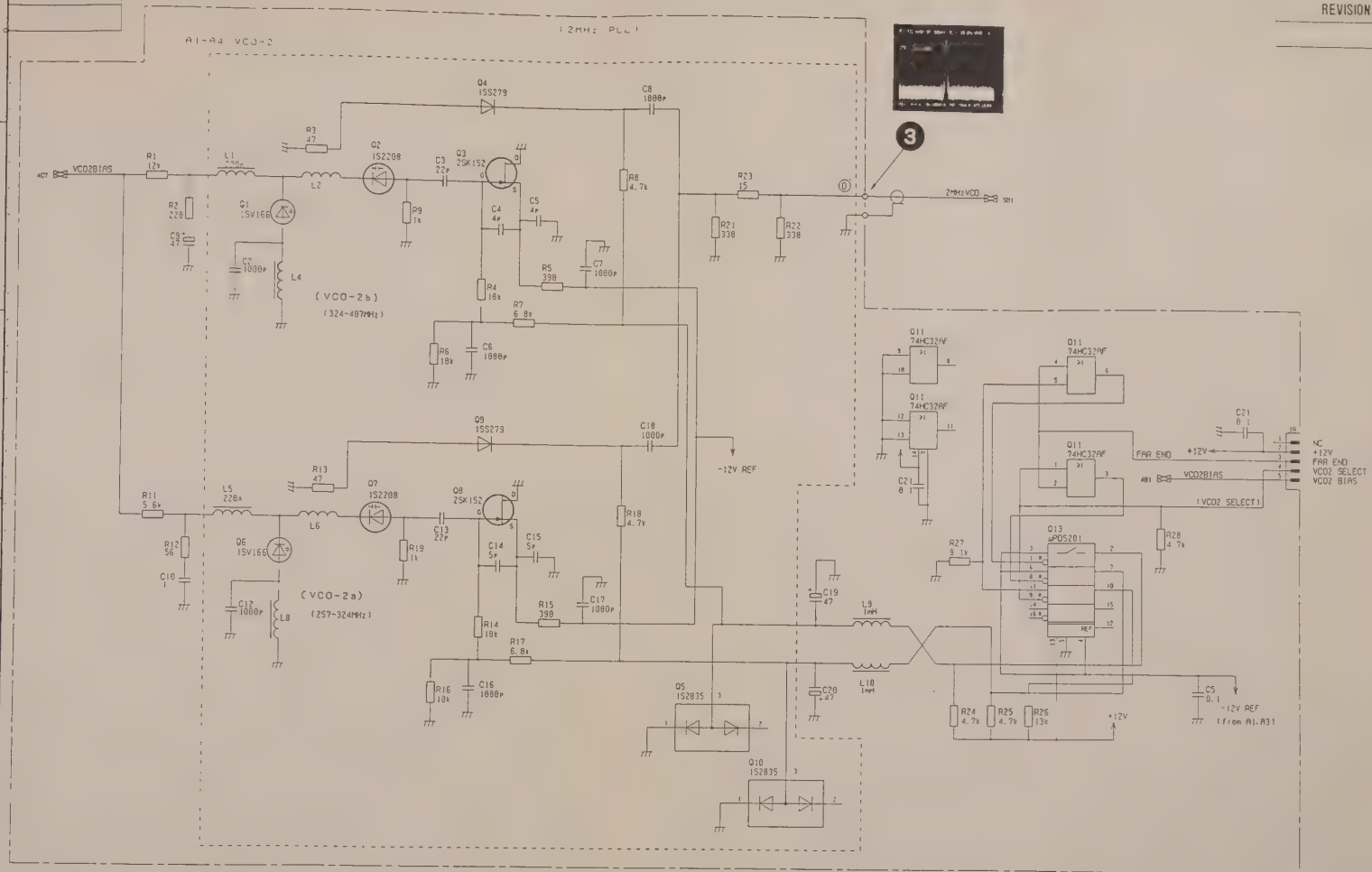

QTY	ITEM	PART No.	DESCRIPTION	MATERIAL	FINISH

13

CHECKED BY NAKAZAWA	DRAWN BY NISIGUTI	SCALE	
APPROVED BY TODA	DESIGNED BY NAKAMURA	:	
TITLE A1 LOCAL		DRAWING No. 43W35216	4/15

PARTS LIST 44W87144 A1-A4

DEP

ANRITSU CORP.

43W35216

APPLICATION

REVISIONS

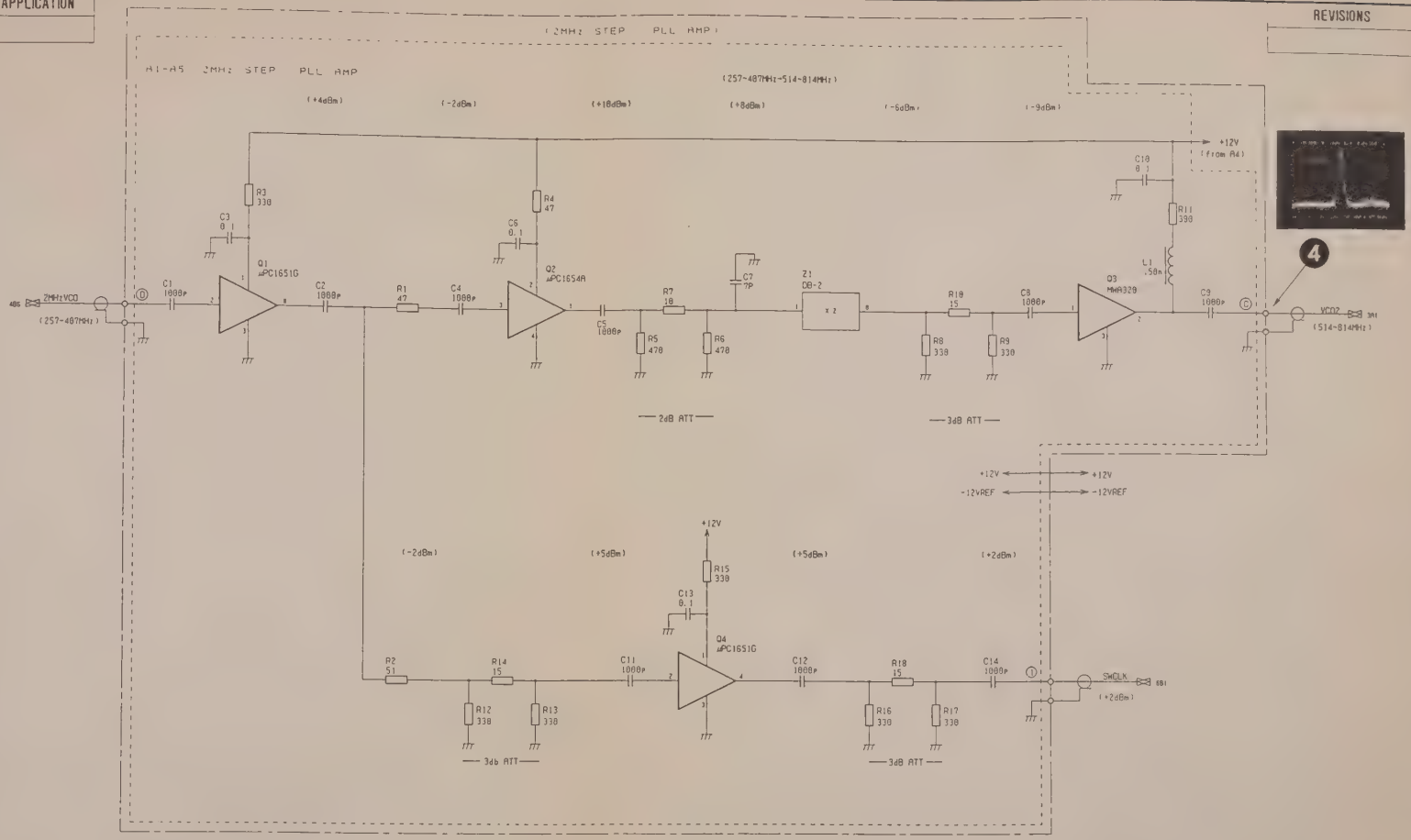

PARTS LIST	44W87145	A1-A5

QTY	ITEM	PART No.	DESCRIPTION	MATERIAL	FINISH

13

CHECKED BY NAKAZAWA	DRAWN BY NISIGUTI	SCALE	
APPROVED BY TODA	DESIGNED BY NAKAMURA		
TITLE A1 LOCAL		DRAWING No. 43W35216	5/15

DEP

ANRITSU CORP.

APPLICATION

REVISIONS

A1-A9 CONT

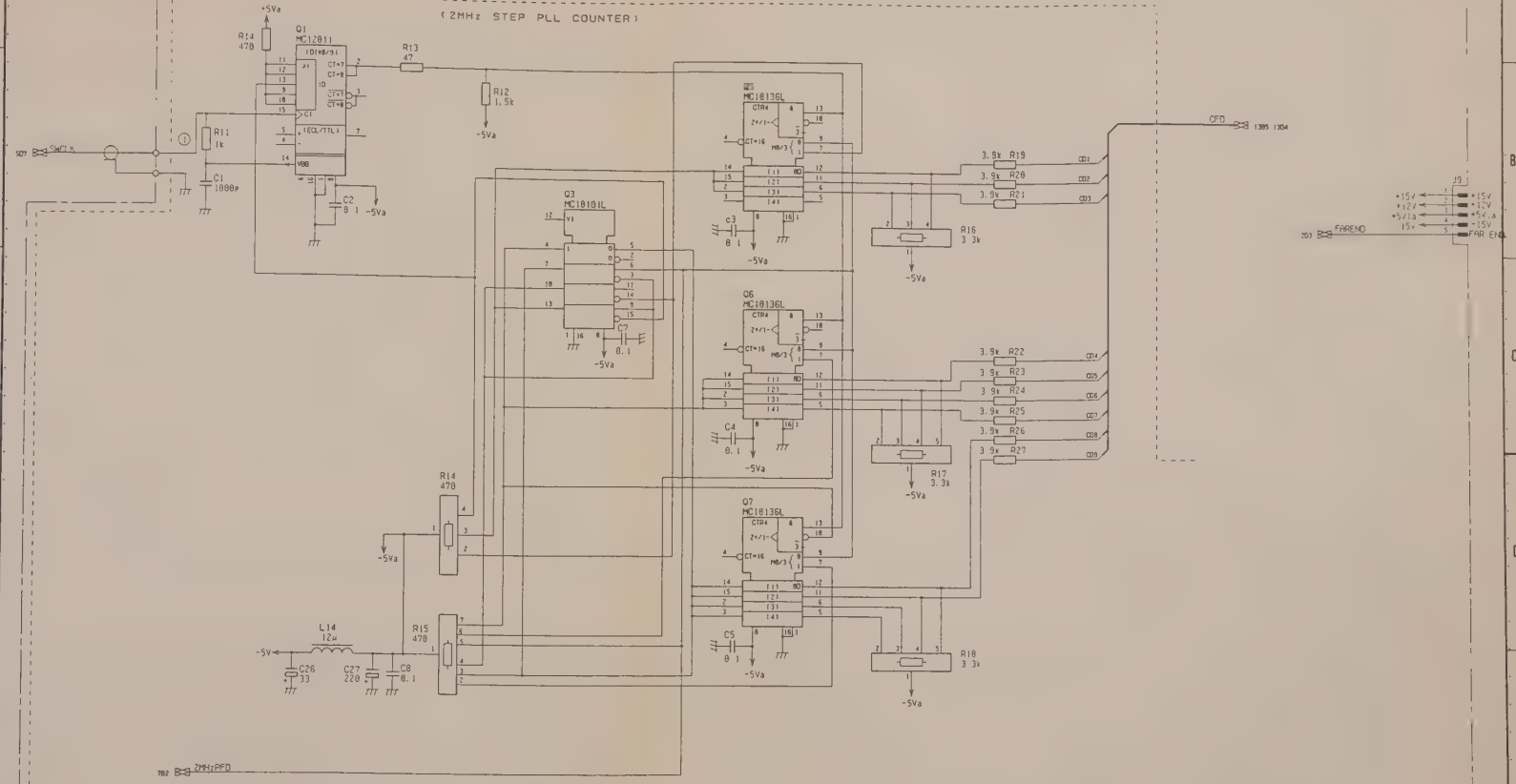

QTY	ITEM	PART No.	DESCRIPTION	MATERIAL	FINISH

CHECKED BY	NAKAZAWA	DRAWN BY	NISIGUTI
APPROVED BY	TODA	DESIGNED BY	NAKAMURA

SCALE :

TITLE A1 LOCAL

DRAWING No. 43W35216 6/15

13

DEP

ANRITSU CORP.

APPLICATION

REVISIONS

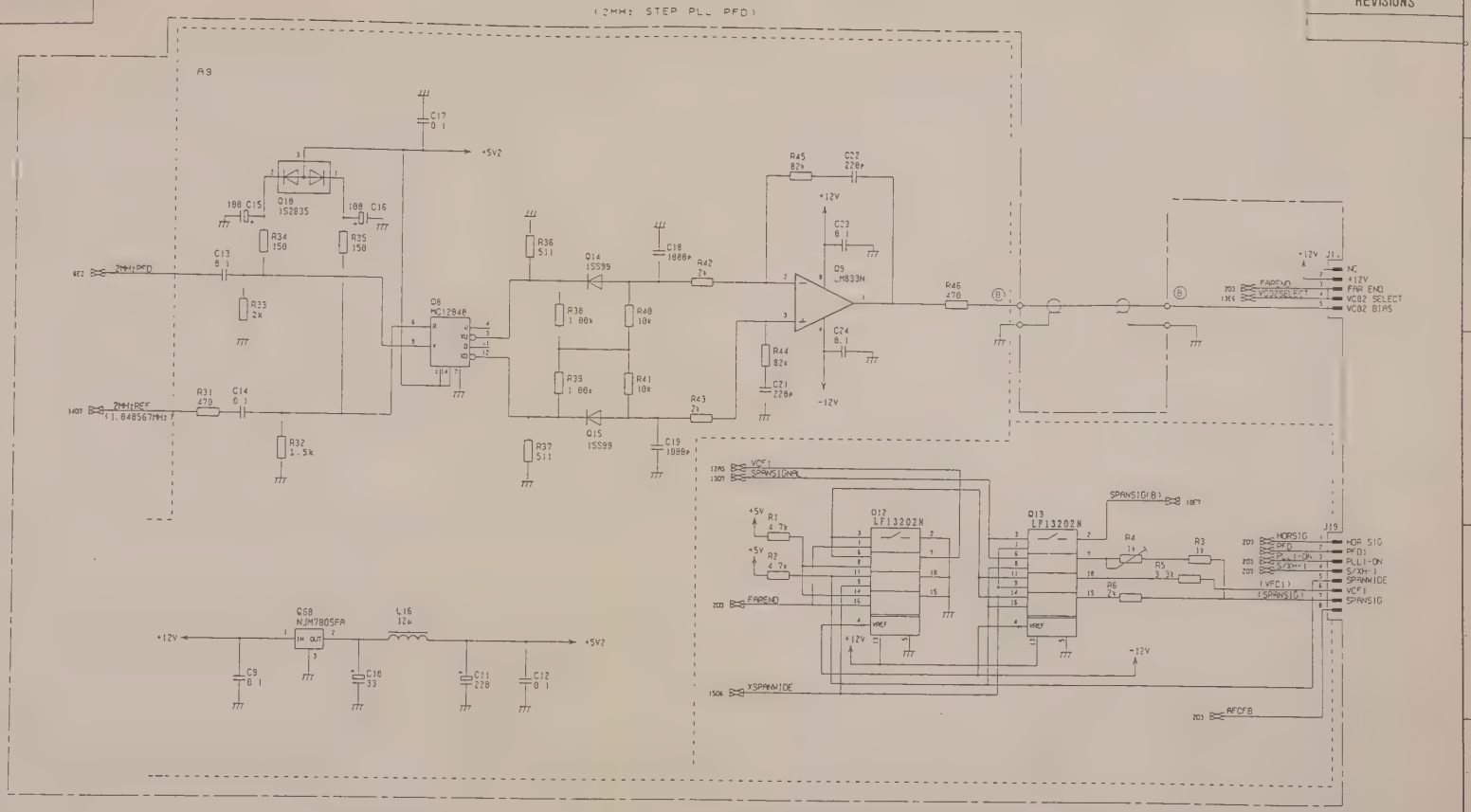

PARTS LIST	44W87149	A1-A9

QTY	ITEM	PART No.	DESCRIPTION	MATERIAL	FINISH

CHECKED BY NAKAZAWA	DRAWN BY NISIGUTI	SCALE	
APPROVED BY TODA	DESIGNED BY NAKAMURA		

TITLE: A1 LOCAL

DRAWING No. 43W35216 7/15

13

DEP

ANRITSU CORP.

43W35216

APPLICATION

REVISIONS

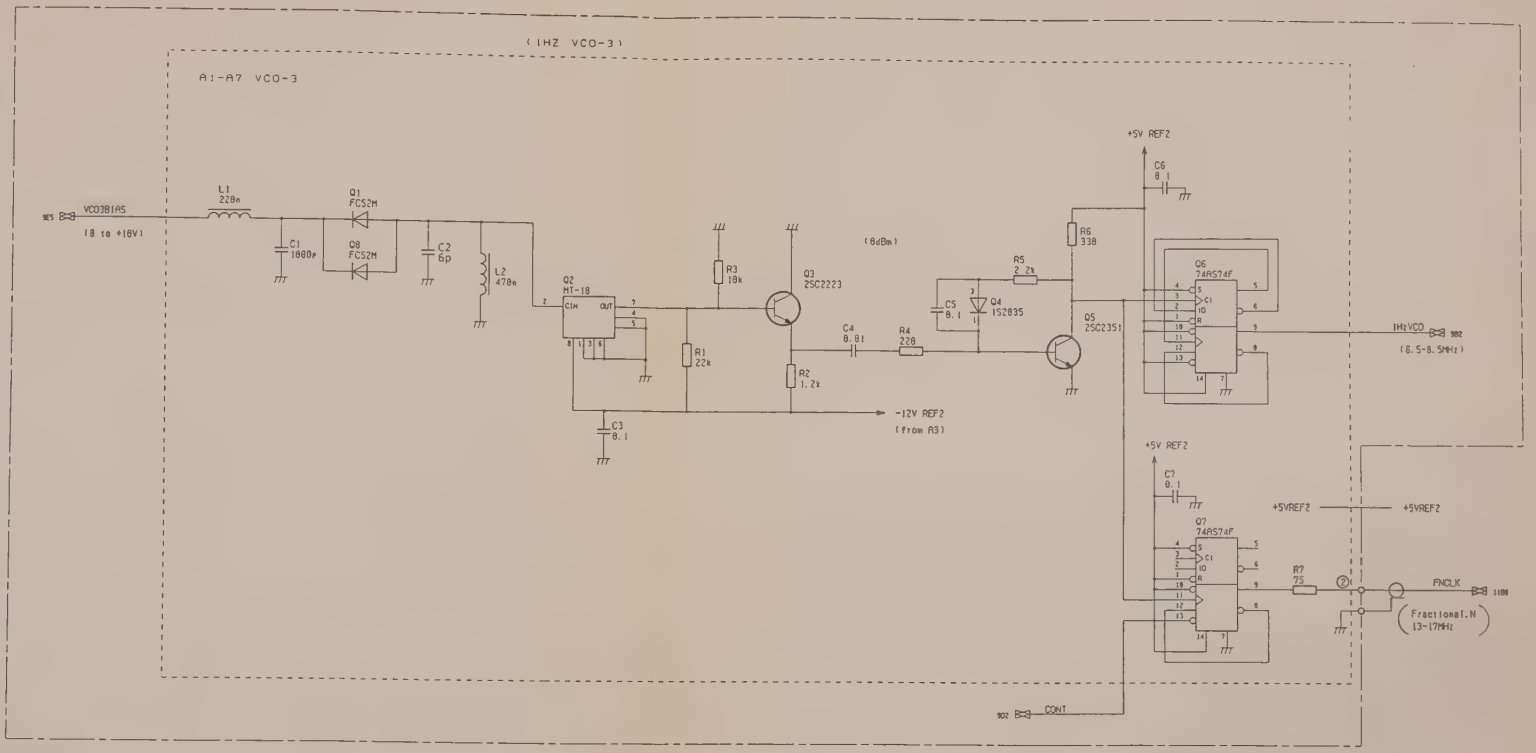

PARTS LIST	44W87147	A1-A7

QTY	ITEM	PART No.	DESCRIPTION	MATERIAL	FINISH

CHECKED BY NAKAZAWA	DRAWN BY NISIGUTI	SCALE :
APPROVED BY TODA	DESIGNED BY NAKAMURA	

TITLE: A1 LOCAL

DRAWING No. 43W35216 0/15

13

DEP

ANRITSU CORP.

3-179/3-180

APPLICATION

REVISIONS

(1Hz PLL AFC)

A1-A8 AFC-3

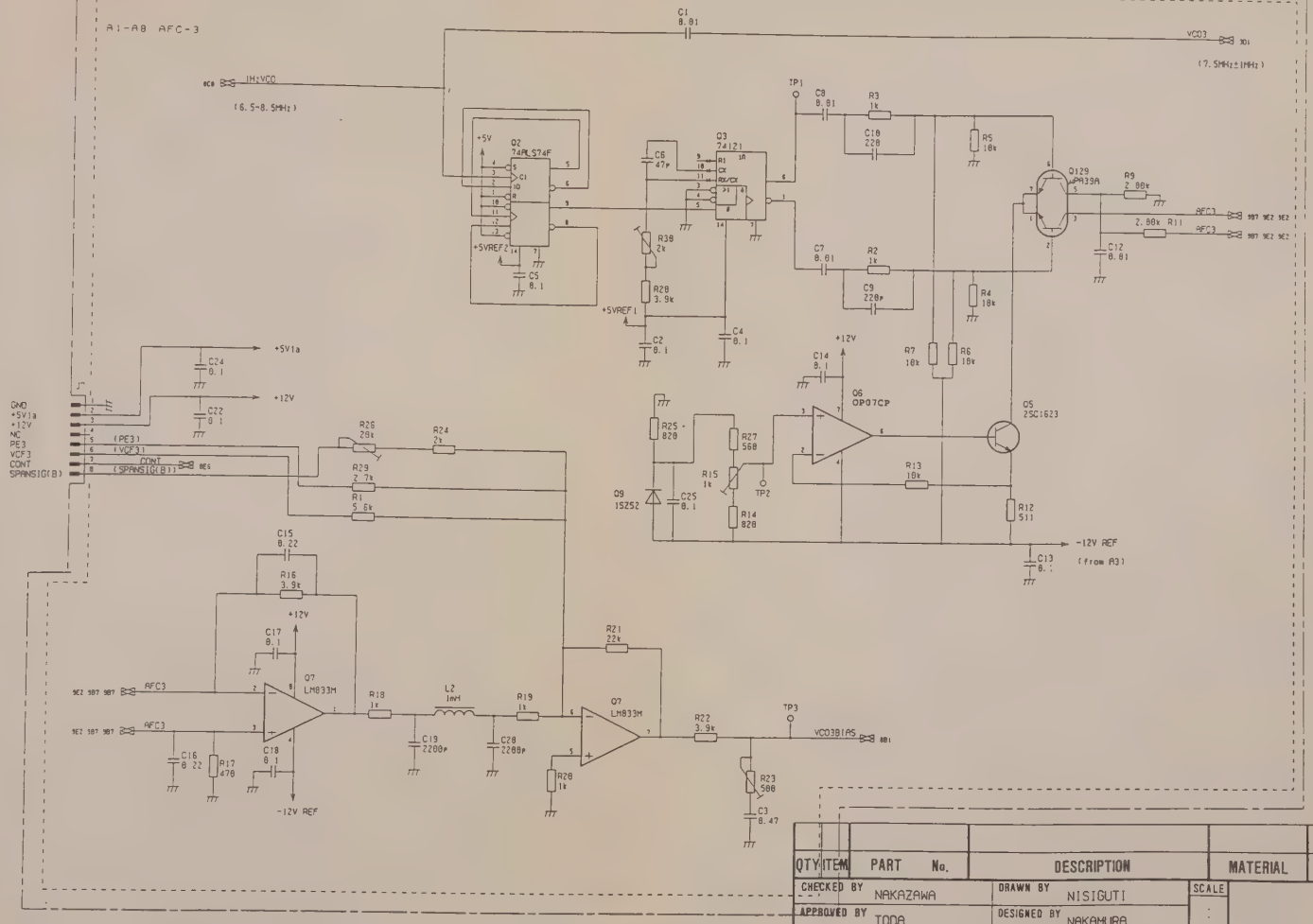

QTY	ITEM	PART No.	DESCRIPTION	MATERIAL	FINISH

CHECKED BY	NAKAZAWA	DRAWN BY	NISIGUTI
APPROVED BY	TODA	DESIGNED BY	NAKAMURA

SCALE :

PARTS LIST | 44W87148 | A1-A8

TITLE: A1 LOCAL

DRAWING No. 43W35216

13

DEP

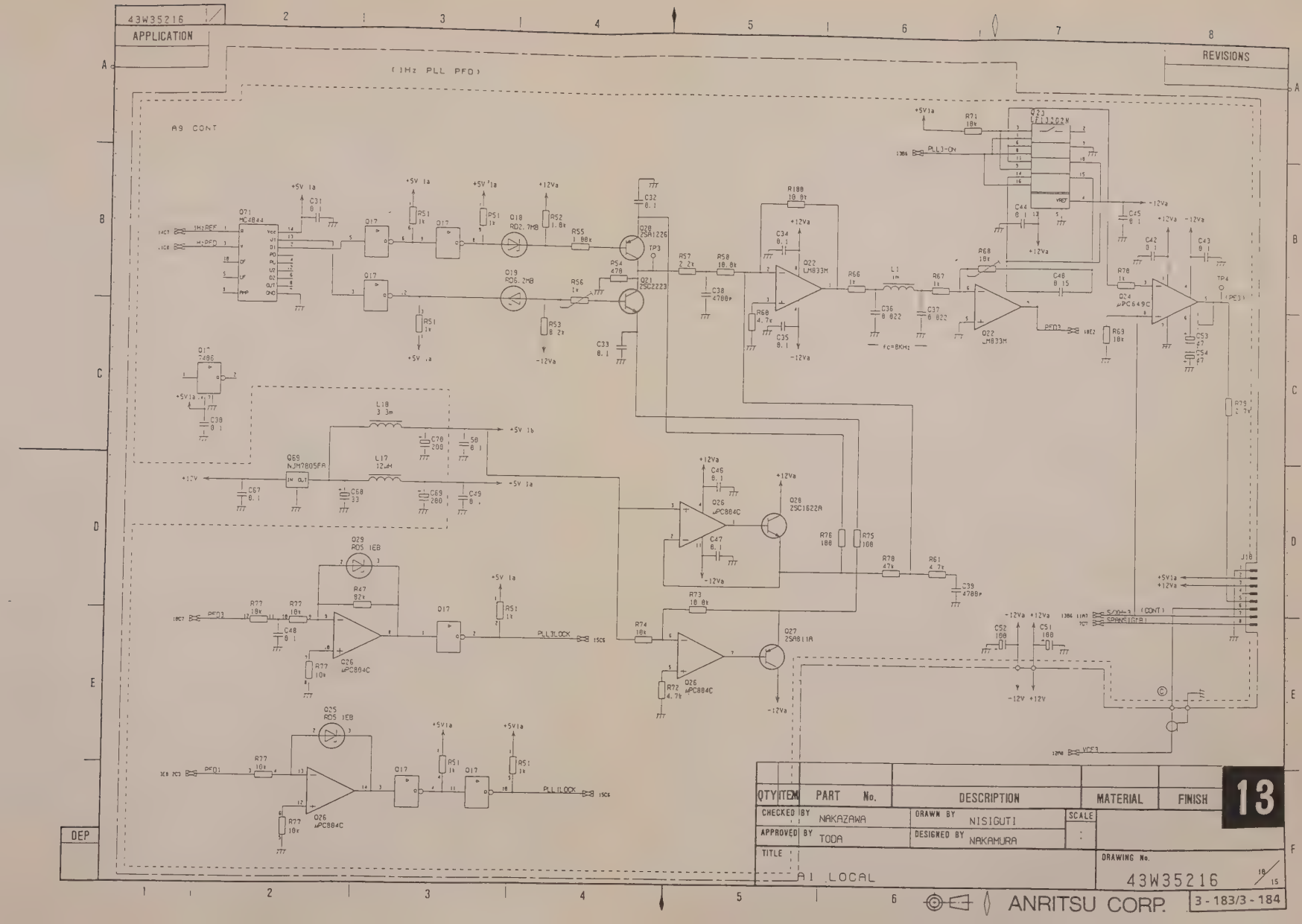
43W35216
APPLICATION
REVISIONS
(1Hz PLL PFD)
A9 CONT
Q71 MC4844
Q17 7486
Q69 NJM7805FA
Q29 RD5 1EB
Q25 RD5 1EB
Q26 μPC884C
Q27 2SA811A
Q28 2SC1622A
Q22 LM833M
Q23 LF13202N
Q24 μPC649C
Q18 RD2.7MB
Q19 RD6.2MB
Q20 2SA1226
Q21 2SC2223
TP3
TP4
PLL3-ON
PLL3LOCK
PLL1LOCK
PFD1
PFD2
PFD3
VCF3
S/VH-3 (CONT)
SPANSIGNAL
fc=8KHz
+5V 1a
+5V 1b
+12V
-12Va
+12Va
-12V +12V
J18
QTY ITEM PART No. DESCRIPTION MATERIAL FINISH
13
CHECKED BY NAKAZAWA
DRAWN BY NISIGUTI
SCALE
APPROVED BY TODA
DESIGNED BY NAKAMURA
TITLE
A1 LOCAL
DRAWING No.
43W35216
ANRITSU CORP.
3-183/3-184
DEP

APPLICATION

REVISIONS

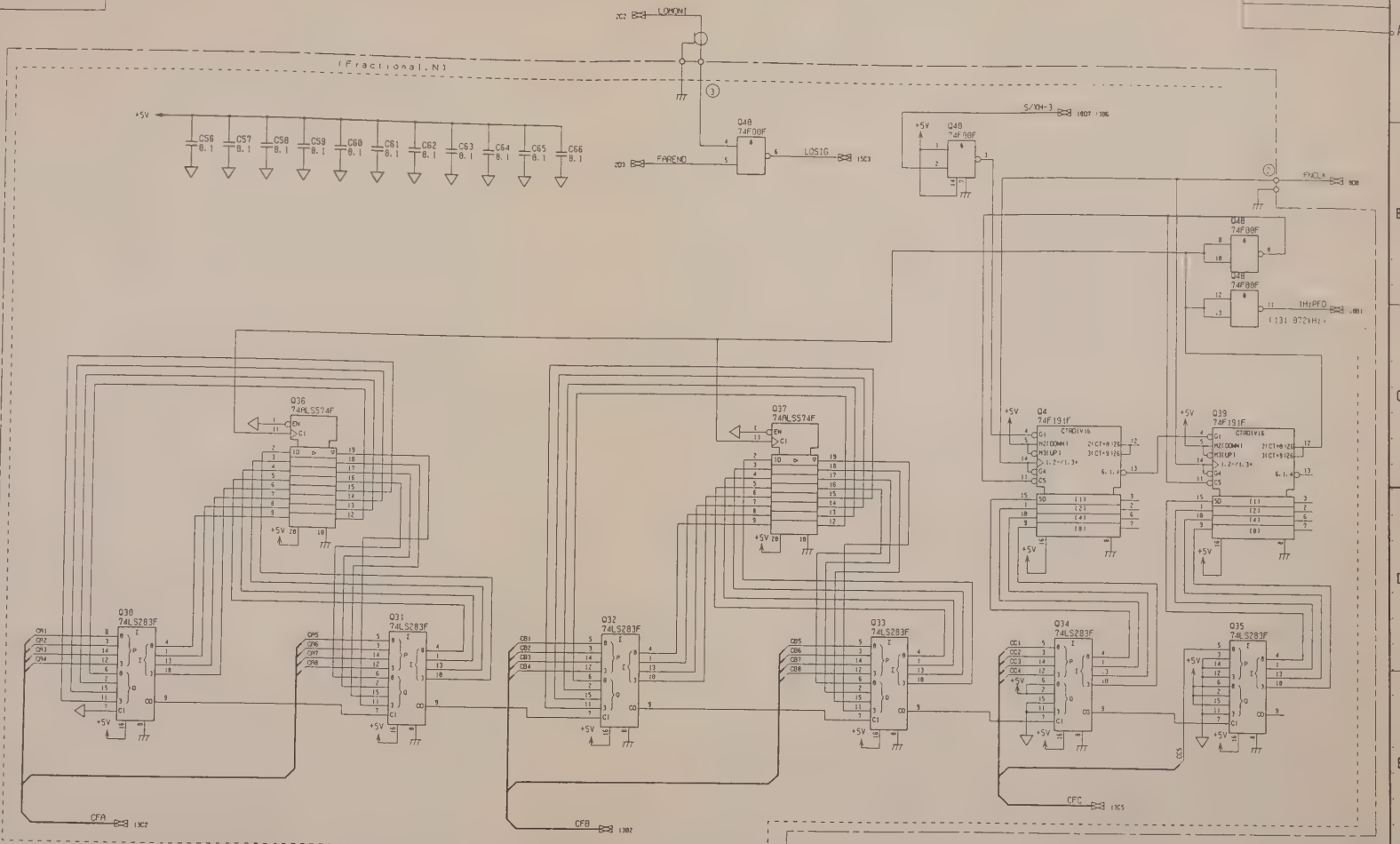

QTY	ITEM	PART No.	DESCRIPTION	MATERIAL	FINISH

CHECKED BY	NAKAZAWA	DRAWN BY	NISIGUTI
APPROVED BY	TODA	DESIGNED BY	NAKAMURA

SCALE :

TITLE

A1 LOCAL

DRAWING No. 43W35216

13

DEP

ANRITSU CORP.

43W35216

APPLICATION

REVISIONS

<CF PRE SET/ F>

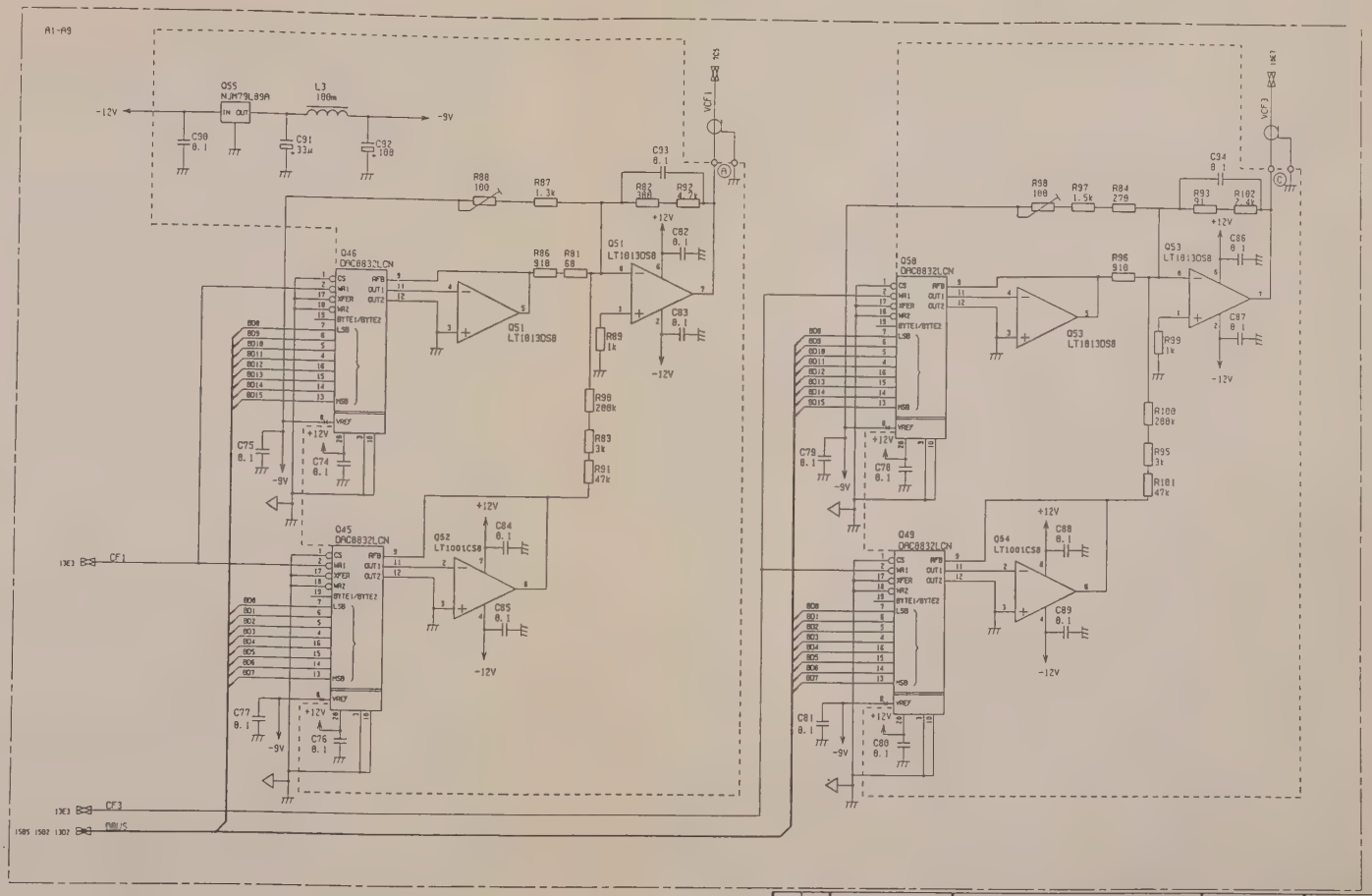

QTY	ITEM	PART No.	DESCRIPTION	MATERIAL	FINISH

13

CHECKED BY NAKAZAWA	DRAWN BY NISIGUTI	SCALE :	
APPROVED BY TODA	DESIGNED BY NAKAMURA		

TITLE: A1 LOCAL

DRAWING No. 43W35216 12/15

DEP

ANRITSU CORP.

APPLICATION

REVISIONS

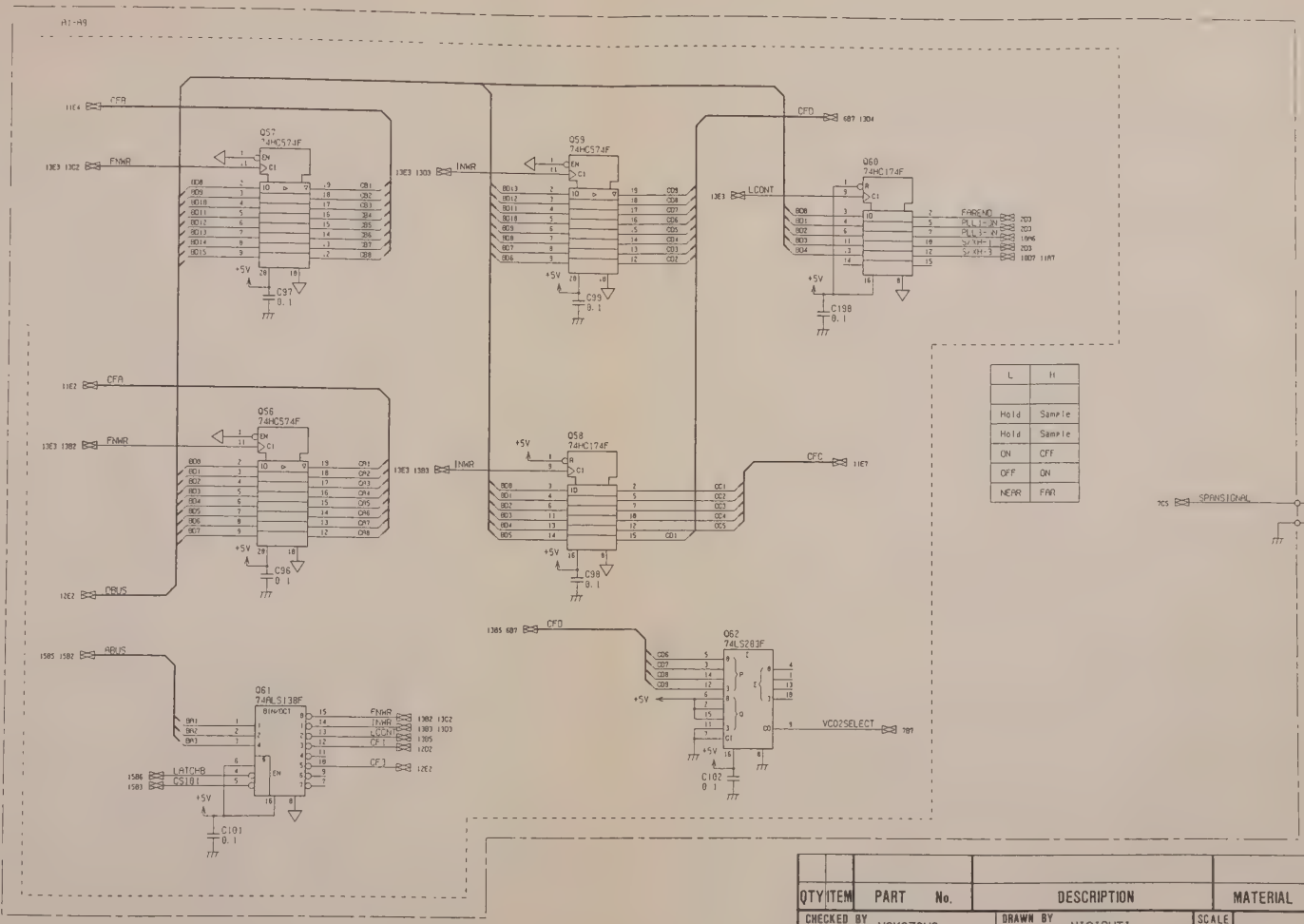

QTY	ITEM	PART No.	DESCRIPTION	MATERIAL	FINISH

CHECKED BY	NAKAZAWA	DRAWN BY	NISIGUTI
APPROVED BY	TODA	DESIGNED BY	NAKAMURA

SCALE :

TITLE: A1 LOCAL

DRAWING No. 43W35216 13/15

13

DEP

ANRITSU CORP.

3-189/3-190

APPLICATION

REVISIONS

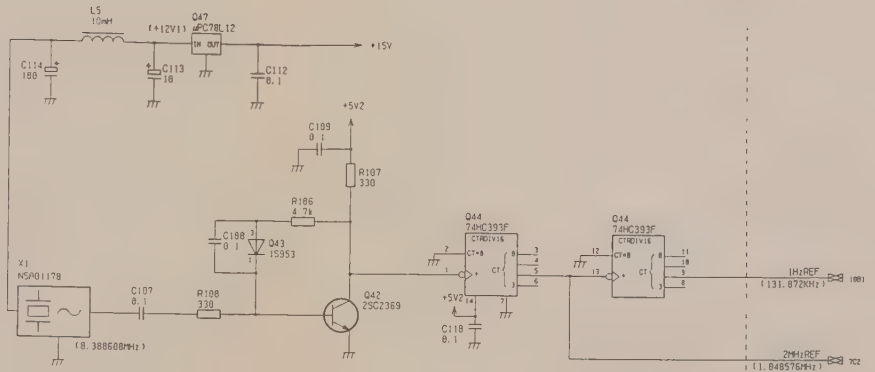

QTY	ITEM	PART No.	DESCRIPTION	MATERIAL	FINISH

CHECKED BY	NAKAZAWA	DRAWN BY	NISIGUTI
APPROVED BY	TODA	DESIGNED BY	NAKAMURA

SCALE :

TITLE: A1 LOCAL

DRAWING No. 43W35216

DEP

13

APPLICATION

REVISIONS

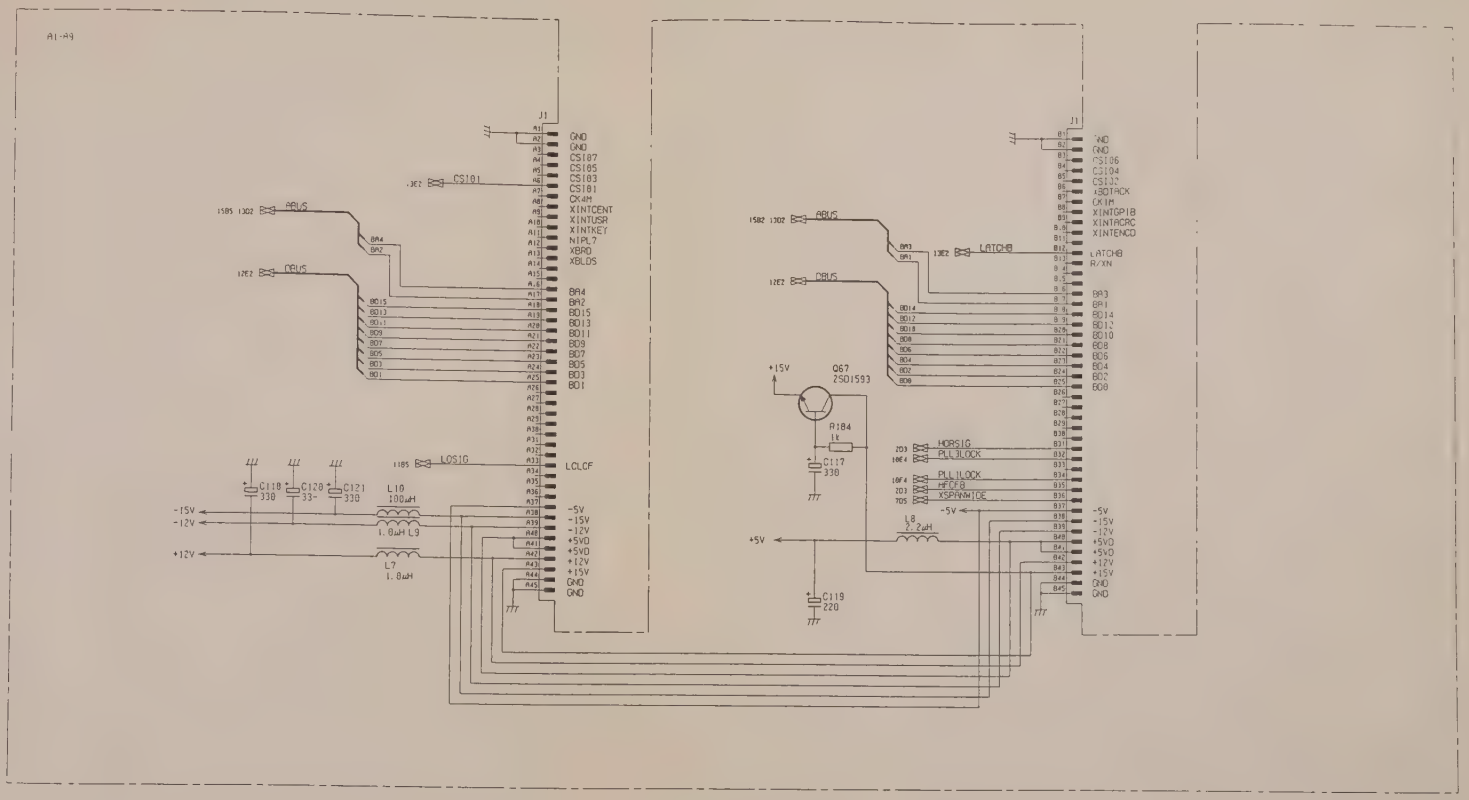

QTY	ITEM	PART No.	DESCRIPTION	MATERIAL	FINISH

CHECKED BY NAKAZAWA	DRAWN BY NISIGUTI	SCALE	
APPROVED BY TODA	DESIGNED BY NAKAMURA		
TITLE A1 LOCAL		DRAWING No. 43W35216	15/15

13

DEP

ANRITSU CORP.

APPLICATION

REVISIONS

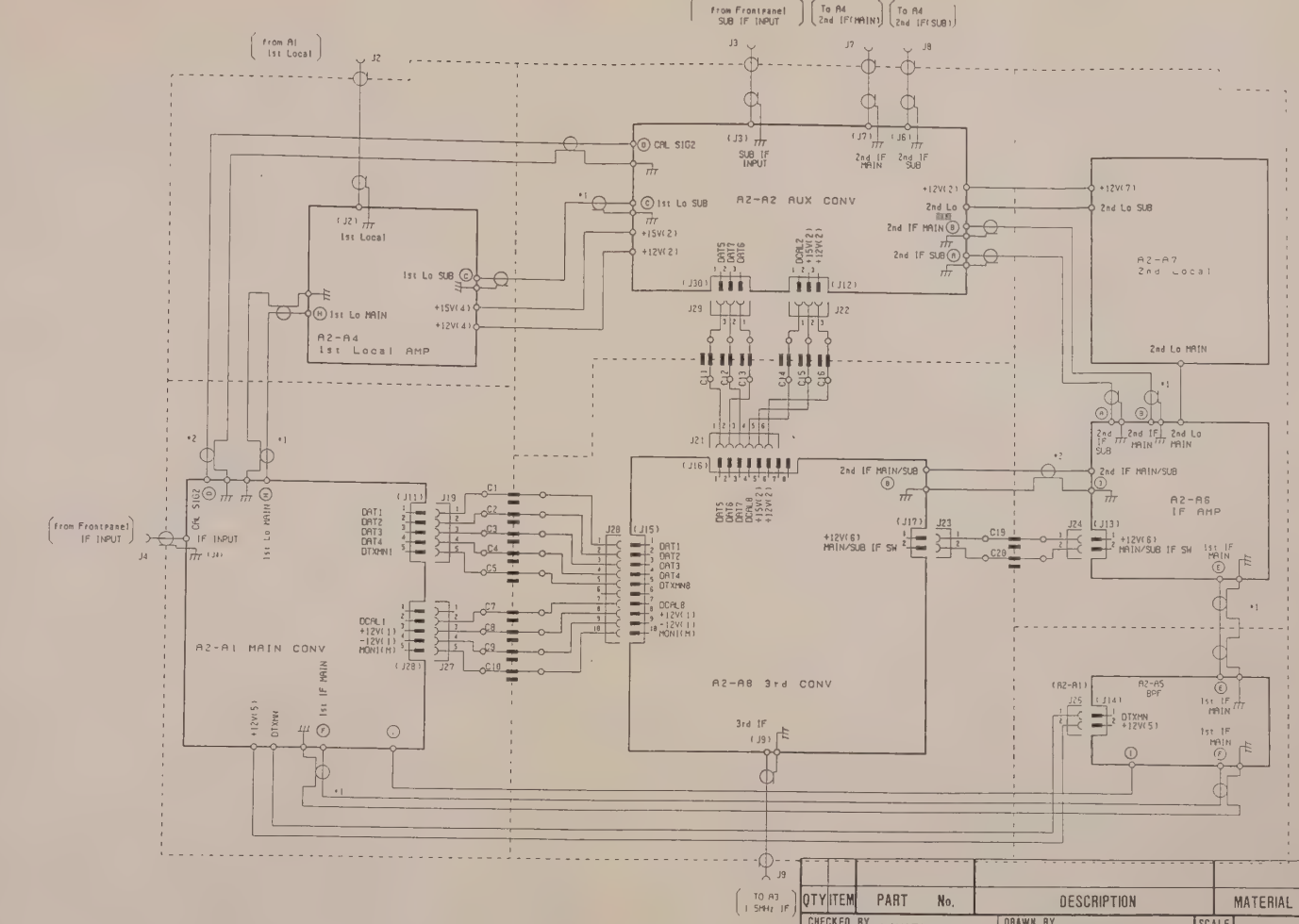

QTY	ITEM	PART No.	DESCRIPTION	MATERIAL	FINISH

CHECKED BY	NAKAZAWA	DRAWN BY	NISIGUTI
APPROVED BY	TODA	DESIGNED BY	YOSIDA

SCALE

TITLE: A2 RF INPUT & IF OVERALL

DRAWING No. 43W39921 1/1

PARTS LIST 44W86742

DEP

14

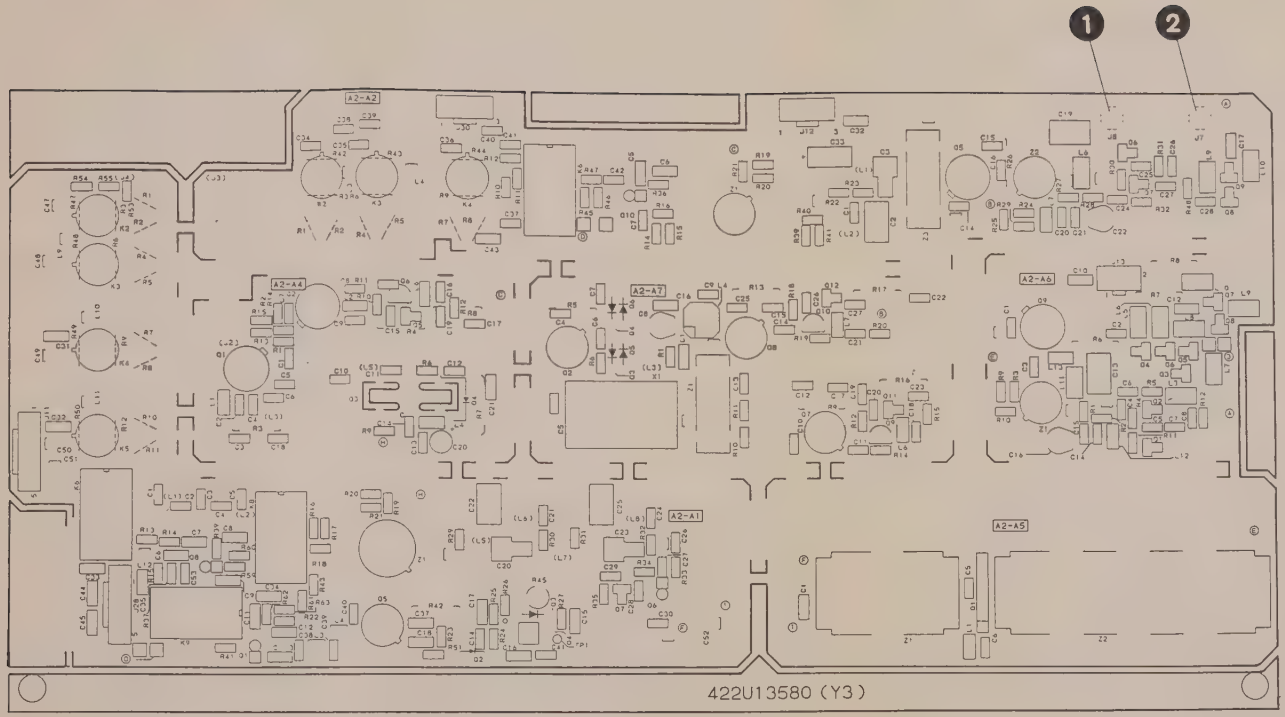

A2-A1 MAIN CONVERTER
PC Board
Parts Layout **15** (1/11 to 8/11)

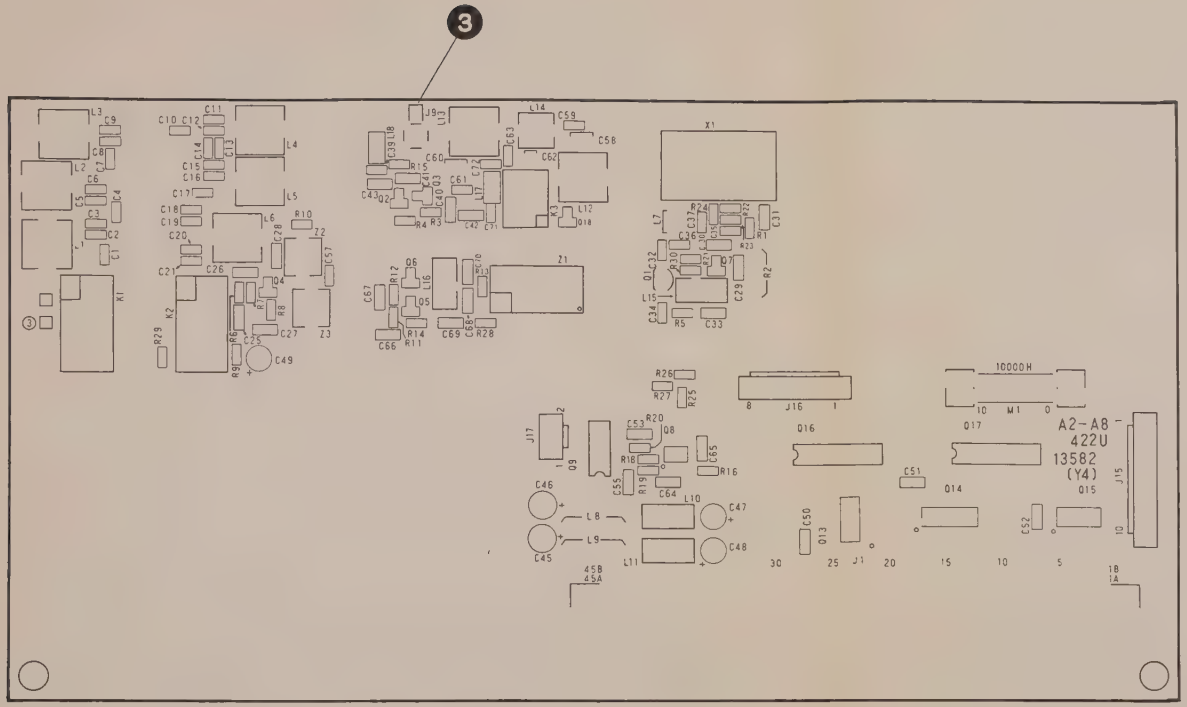

A2-A8 3rd CONVERTER
PC Board
Parts Layout **15** (9/11 to 11/11)

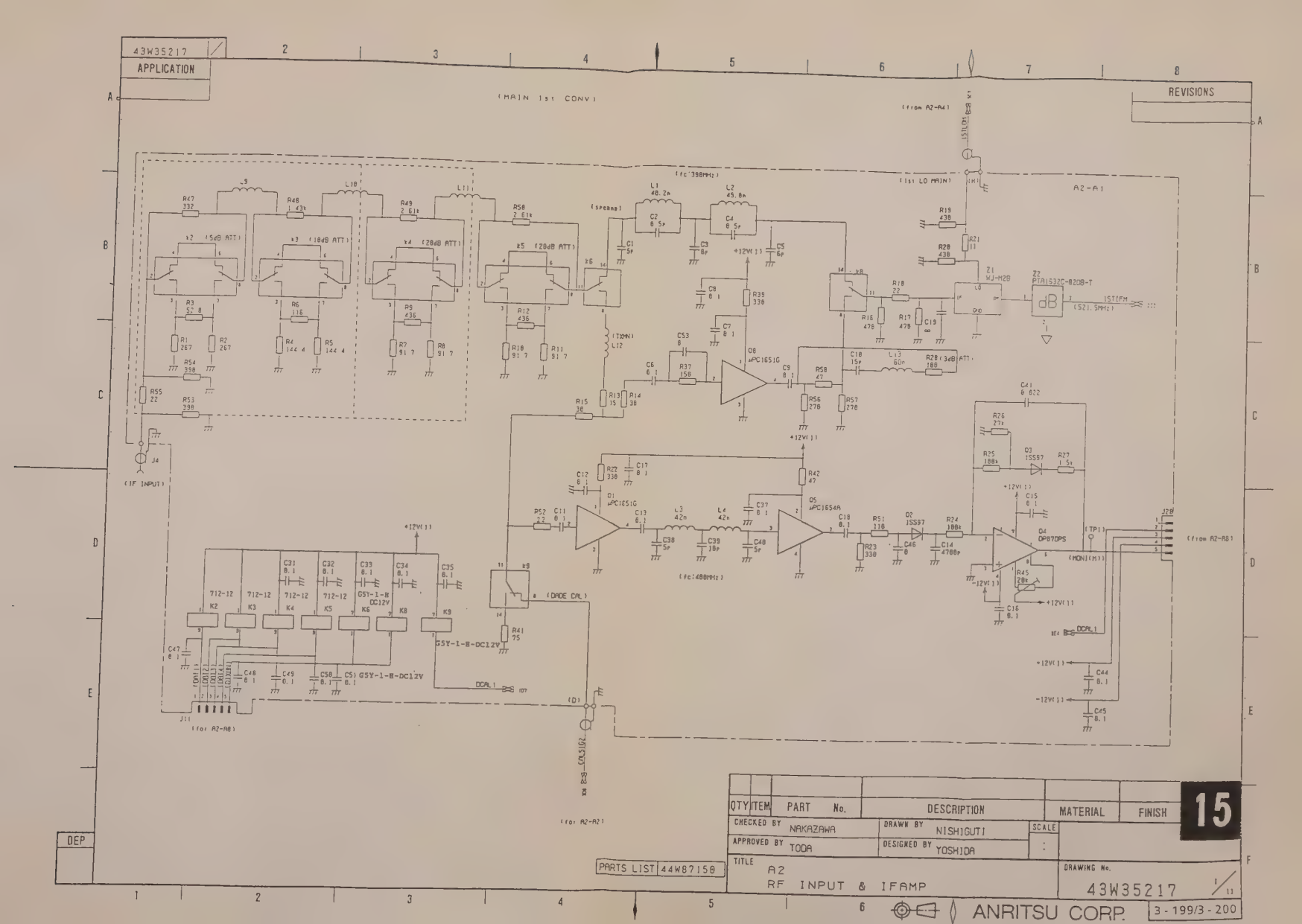
43W35217
APPLICATION
REVISIONS
(MAIN 1st CONV)
A2-A1
(from A2-A4)
(1st LO MAIN)
(fc:398MHz)
(fc:480MHz)
(IF INPUT)
(from A2-A8)
(from A2-A7)
(for A2-A8)
(for A2-A7)
(DADE CRL)
DCRL1
DCOL1G2
(TP1)
(MON1(H))
(D)
+12V(1)
-12V(1)
J4
J11
Z1 MJ-M28
Z2 PTA1632C-B208-T
1STIFM
(52.5MHz)
Q1 μPC1651G
Q5 μPC1654A
Q8 μPC1651G
Q2 1SS97
Q3 1SS97
Q4 OP07DPS
712-12
GSY-1-H DC12V
GSY-1-H-DC12V
PARTS LIST 44W87150
QTY ITEM PART No. DESCRIPTION MATERIAL FINISH
CHECKED BY NAKAZAWA
DRAWN BY NISHIGUTI
APPROVED BY TODA
DESIGNED BY YOSHIDA
SCALE
TITLE A2 RF INPUT & IFAMP
DRAWING No. 43W35217 1/13
DEP
15
ANRITSU CORP.
3-199/3-200

APPLICATION

REVISIONS

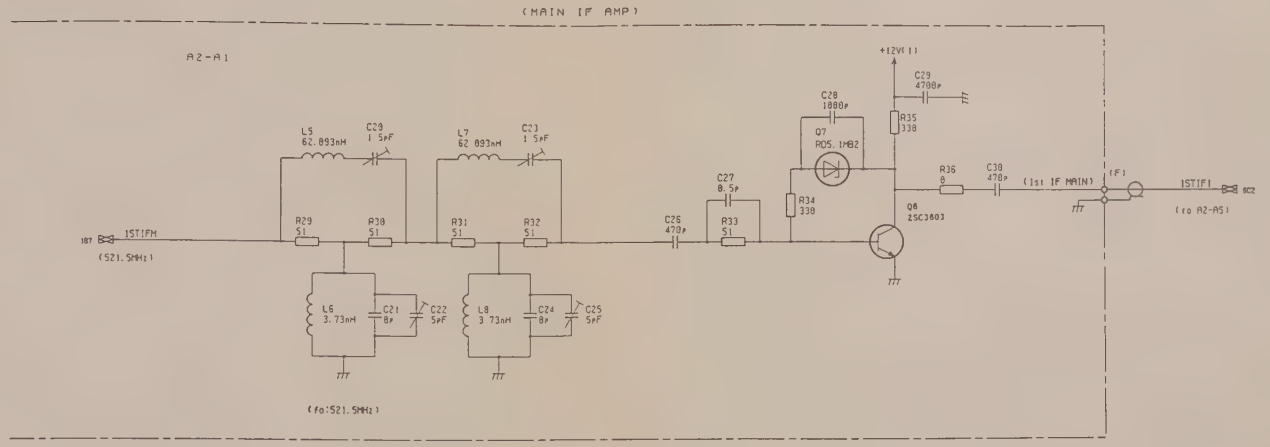

QTY	ITEM	PART No.	DESCRIPTION	MATERIAL	FINISH

15

CHECKED BY	NAKAZAWA	DRAWN BY	NISHIGUTI
APPROVED BY	TODA	DESIGNED BY	YOSHIDA

SCALE :

TITLE
A2
RF INPUT & IFAMP

DRAWING No.
43W35217 2/11

DEP

ANRITSU CORP.

43W35217

APPLICATION

REVISIONS

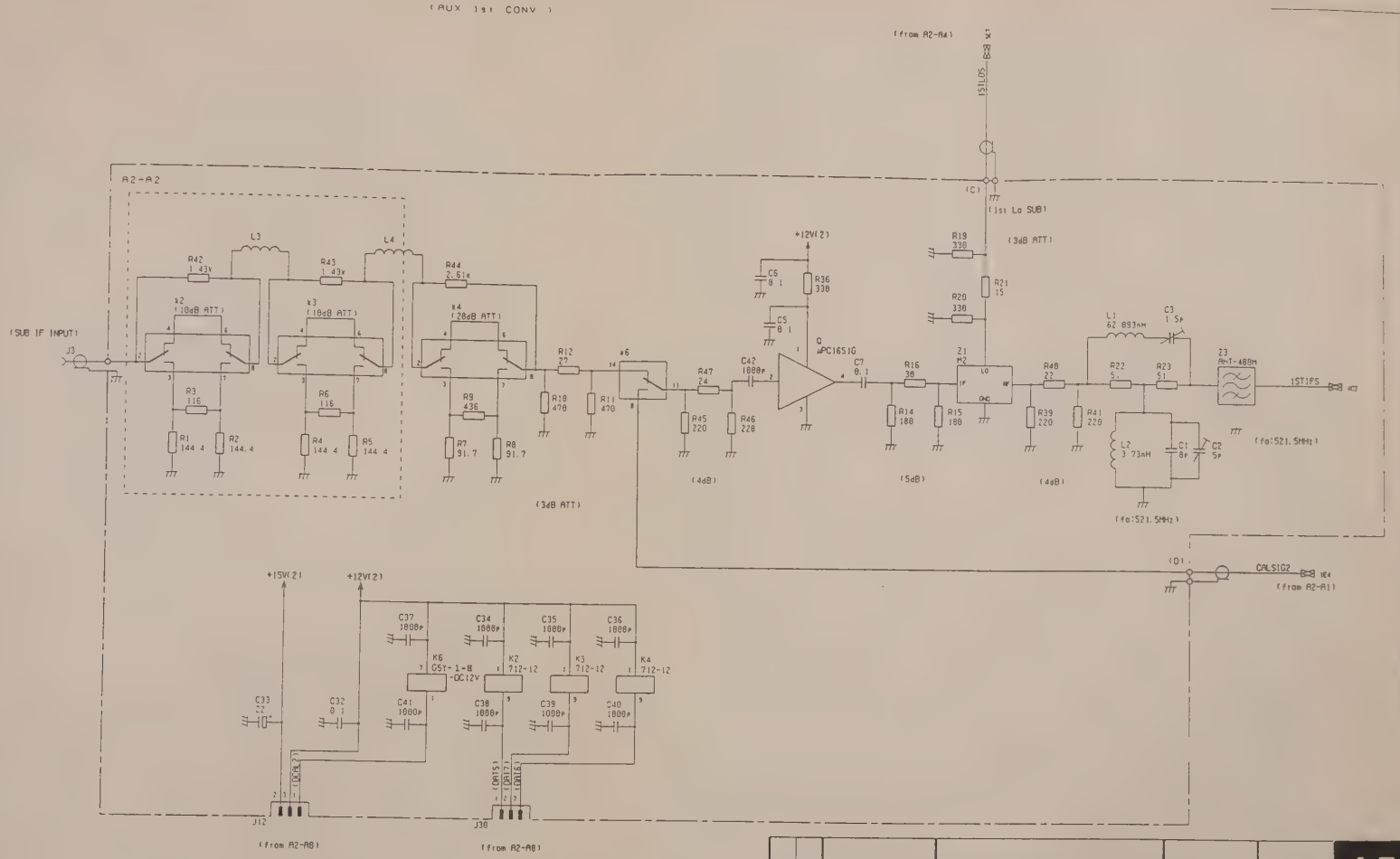

QTY	ITEM	PART No.	DESCRIPTION	MATERIAL	FINISH

CHECKED BY NAKAZAWA	DRAWN BY NISHIGUTI	SCALE	
APPROVED BY TODA	DESIGNED BY YOSHIDA		

TITLE
A2
RF INPUT & IFAMP

DRAWING No.
43W35217

PARTS LIST 44W87151

DEP

15

ANRITSU CORP.

43W35217

APPLICATION

REVISIONS

(AUX 2nd CONV)

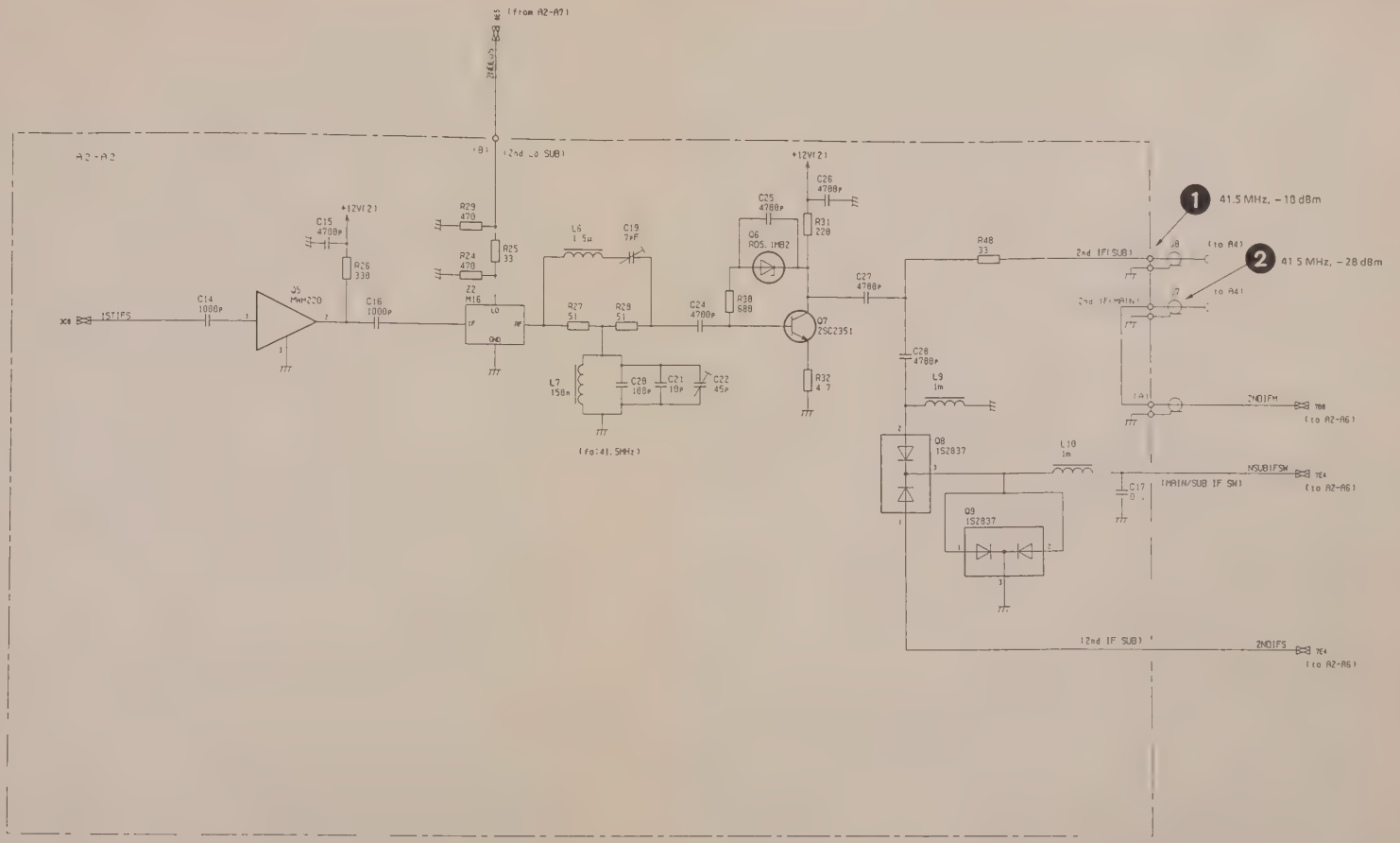

QTY	ITEM	PART No.	DESCRIPTION	MATERIAL	FINISH

CHECKED BY NAKAZAWA	DRAWN BY NISHIGUTI	SCALE :	
APPROVED BY TODA	DESIGNED BY YOSHIDA		

TITLE
A2
RF INPUT & IFAMP

DRAWING No.
43W35217 4/11

DEP

15

ANRITSU CORP.

3-205/3-206

43W35217 1/

APPLICATION

REVISIONS

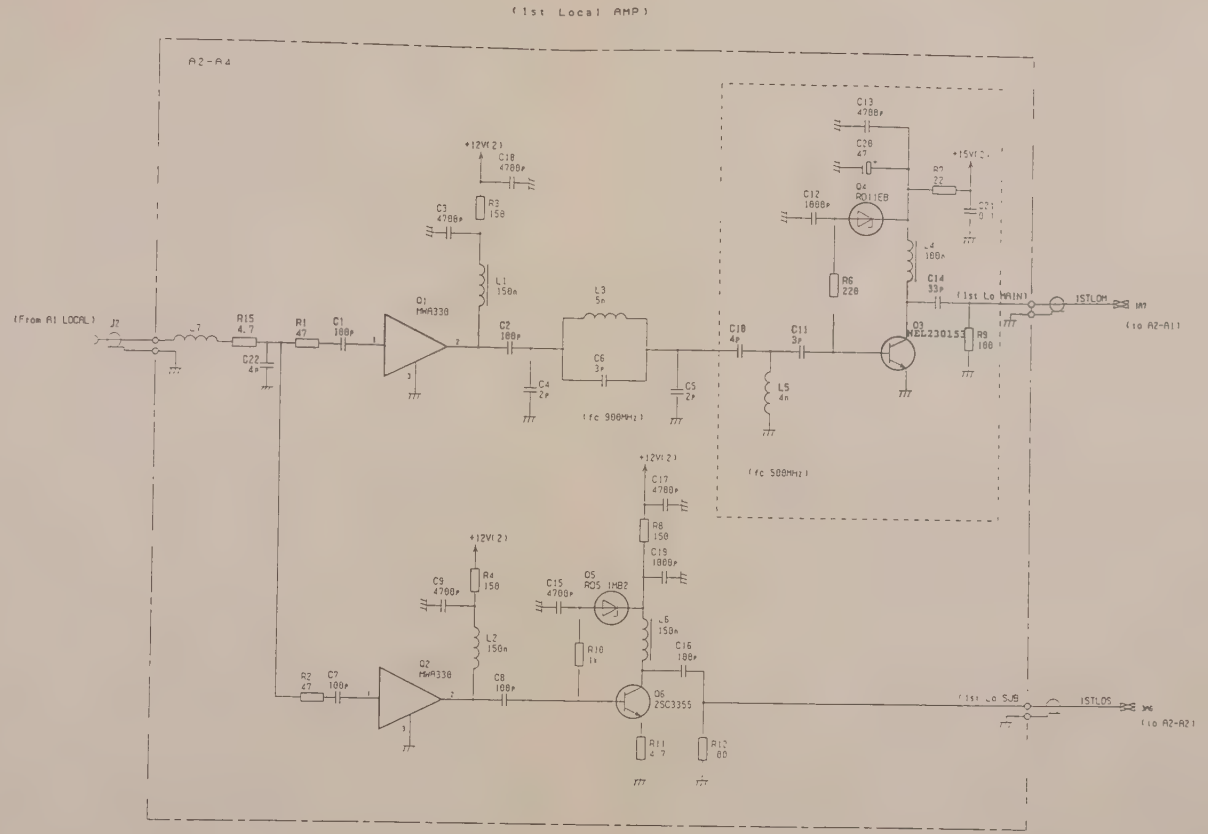

QTY	ITEM	PART No.	DESCRIPTION	MATERIAL	FINISH

CHECKED BY NAKAZAWA	DRAWN BY NISHIGUTI	SCALE
APPROVED BY TODA	DESIGNED BY YOSHIDA	

TITLE A2
RF INPUT & IFAMP

DRAWING No. 43W35217 5/11

PARTS LIST 44W87153

DEP

15

ANRITSU CORP.

3-207/3-208

APPLICATION

REVISIONS

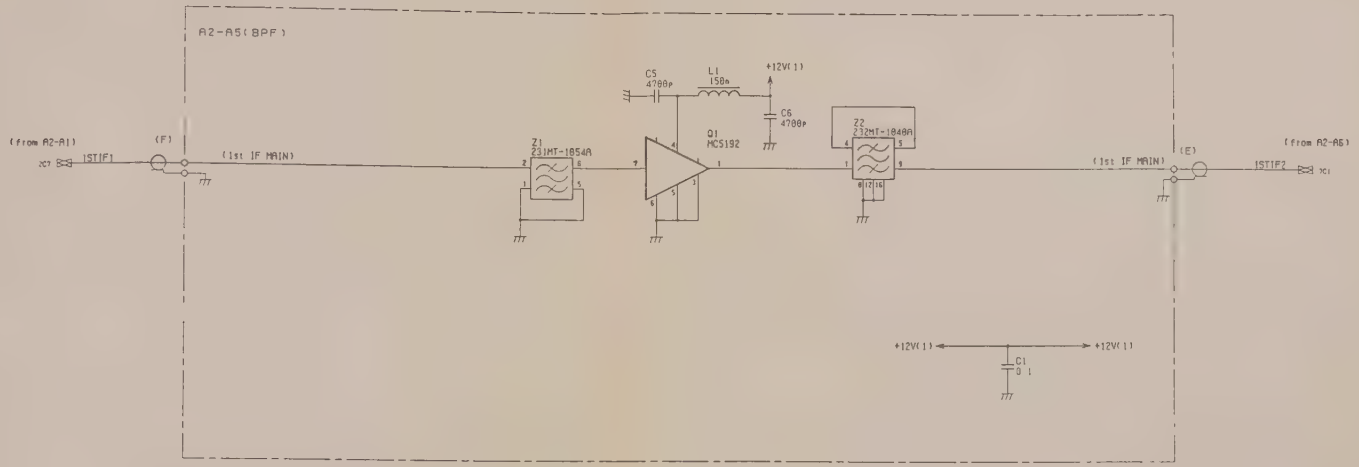

QTY	ITEM	PART No.	DESCRIPTION	MATERIAL	FINISH

15

CHECKED BY NAKAZAWA	DRAWN BY NISHIGUTI	SCALE :	
APPROVED BY TODA	DESIGNED BY YOSHIDA		

TITLE A2
RF INPUT & IFAMP

DRAWING No. 43W35217 6/11

PARTS LIST 44W8715A

DEP

ANRITSU CORP.

APPLICATION

REVISIONS

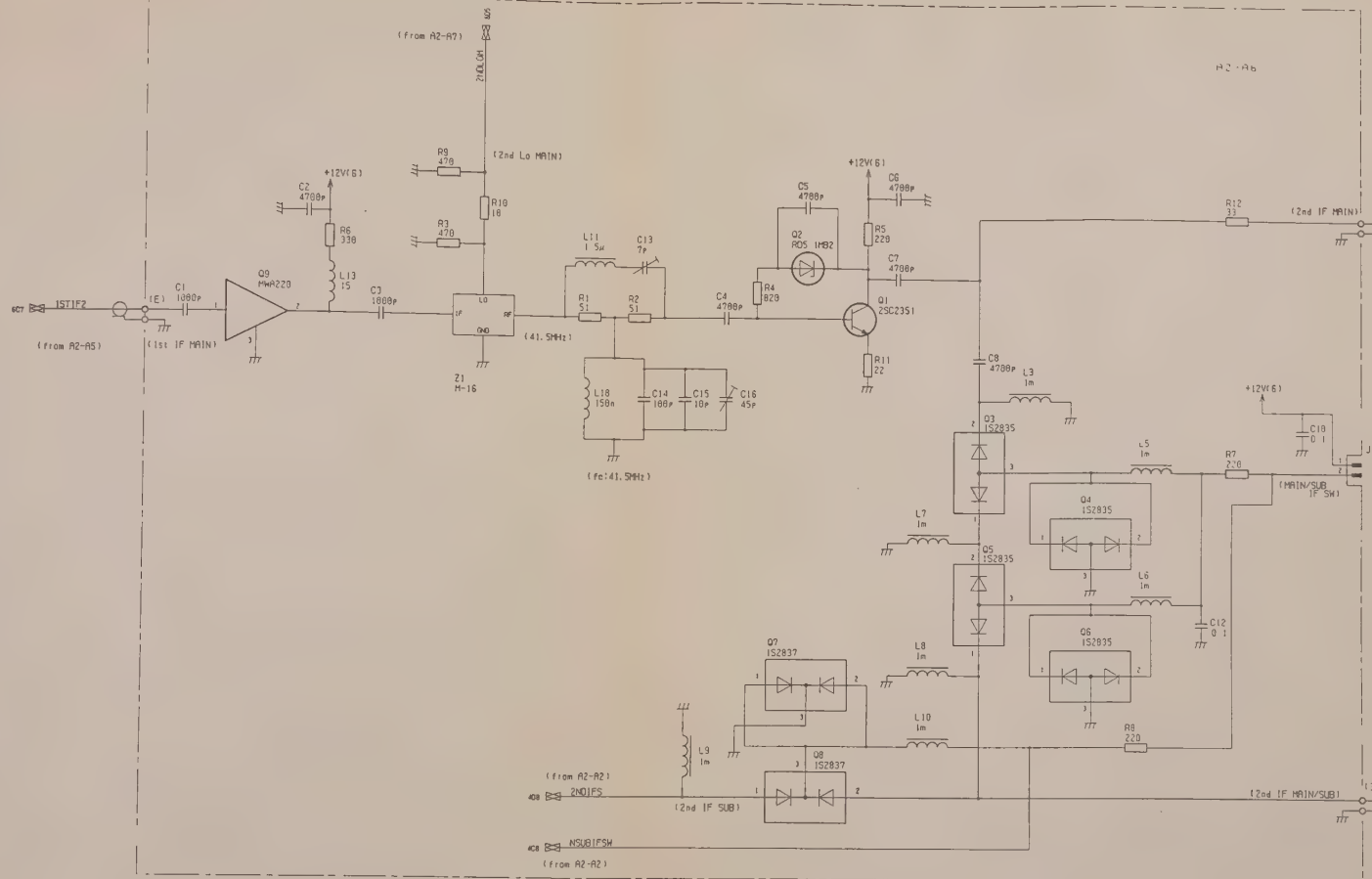

QTY	ITEM	PART No.	DESCRIPTION	MATERIAL	FINISH

15

CHECKED BY NAKAZAWA	DRAWN BY NISHIGUTI	SCALE :	
APPROVED BY TODA	DESIGNED BY YOSHIDA		

TITLE: A2 RF INPUT & IFAMP

DRAWING No. 43W35217 7/11

PARTS LIST 44W87155

DEP

43W35217

APPLICATION

REVISIONS

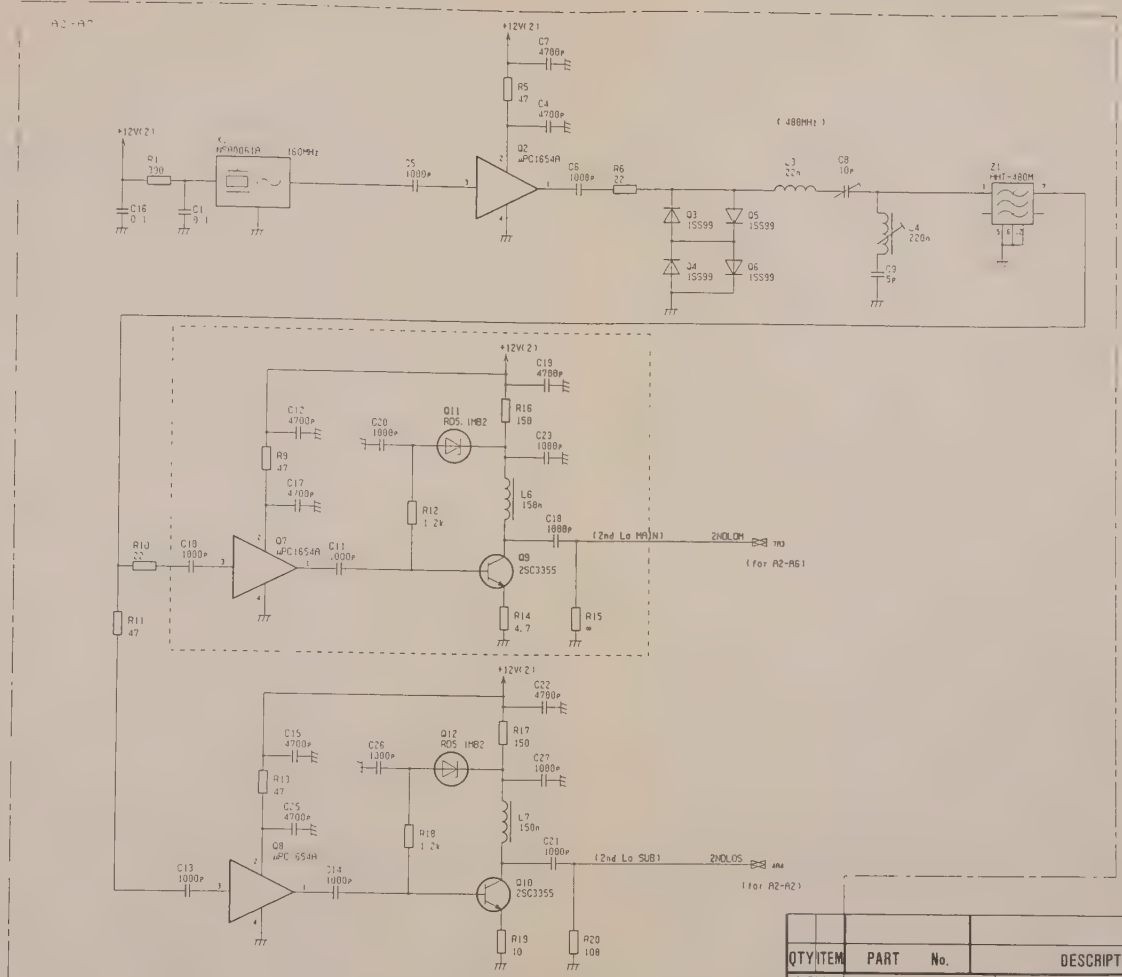

QTY	ITEM	PART No.	DESCRIPTION	MATERIAL	FINISH

CHECKED BY NAKAZAWA	DRAWN BY NISHIGUTI	SCALE	
APPROVED BY TODA	DESIGNED BY YOSHIDA		

TITLE
A2
RF INPUT & IFAMP

DRAWING No.
43W35217

PARTS LIST 44WA7156

DEP

15

ANRITSU CORP.

3-213/3-214

APPLICATION

REVISIONS

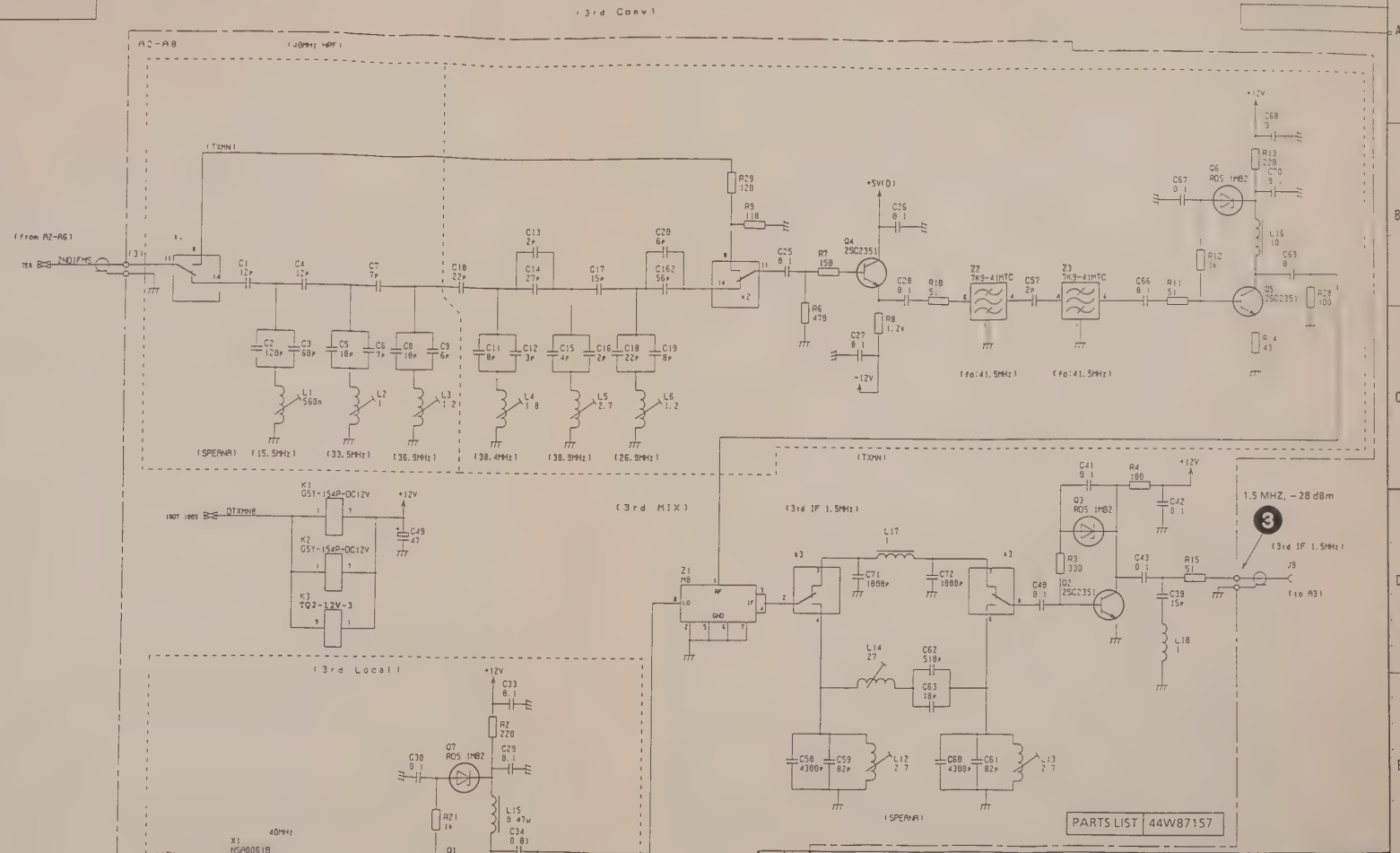

PARTS LIST | 44W87157

QTY	ITEM	PART No.	DESCRIPTION	MATERIAL	FINISH

CHECKED BY	NAKAZAWA	DRAWN BY	NISHIGUTI
APPROVED BY	TODA	DESIGNED BY	YOSHIOA
SCALE	:		

TITLE: A2 RF INPUT & IFAMP

DRAWING No. 43W35217

15

DEP

APPLICATION

REVISIONS

(Relay Drive)

A2-A8

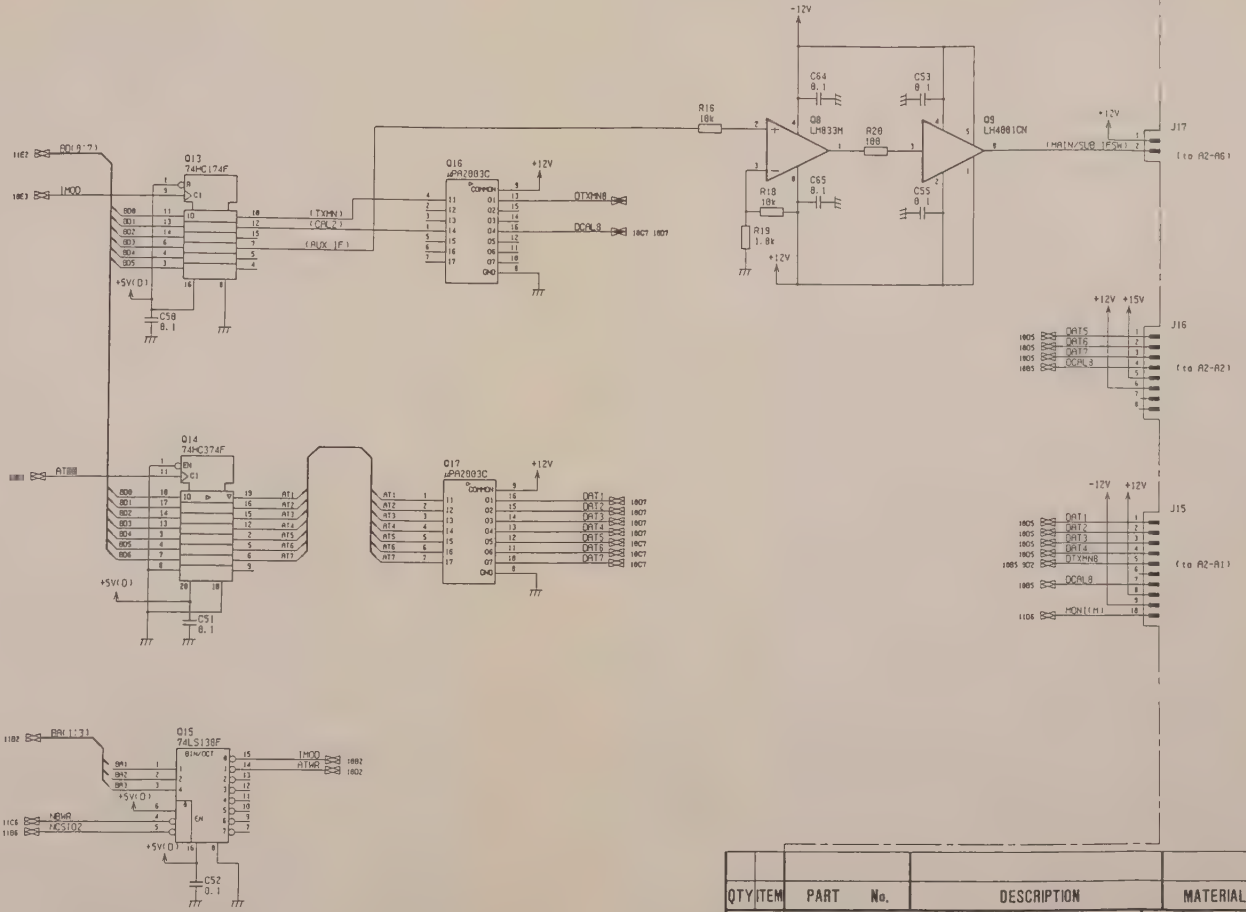

QTY	ITEM	PART No.	DESCRIPTION	MATERIAL	FINISH

CHECKED BY NAKAZAWA	DRAWN BY NISHIGUTI	SCALE	
APPROVED BY TODA	DESIGNED BY YOSHIDA		

TITLE
A2
RF INPUT & IFAMP

DRAWING No.
43W35217

15

DEP

APPLICATION

REVISIONS

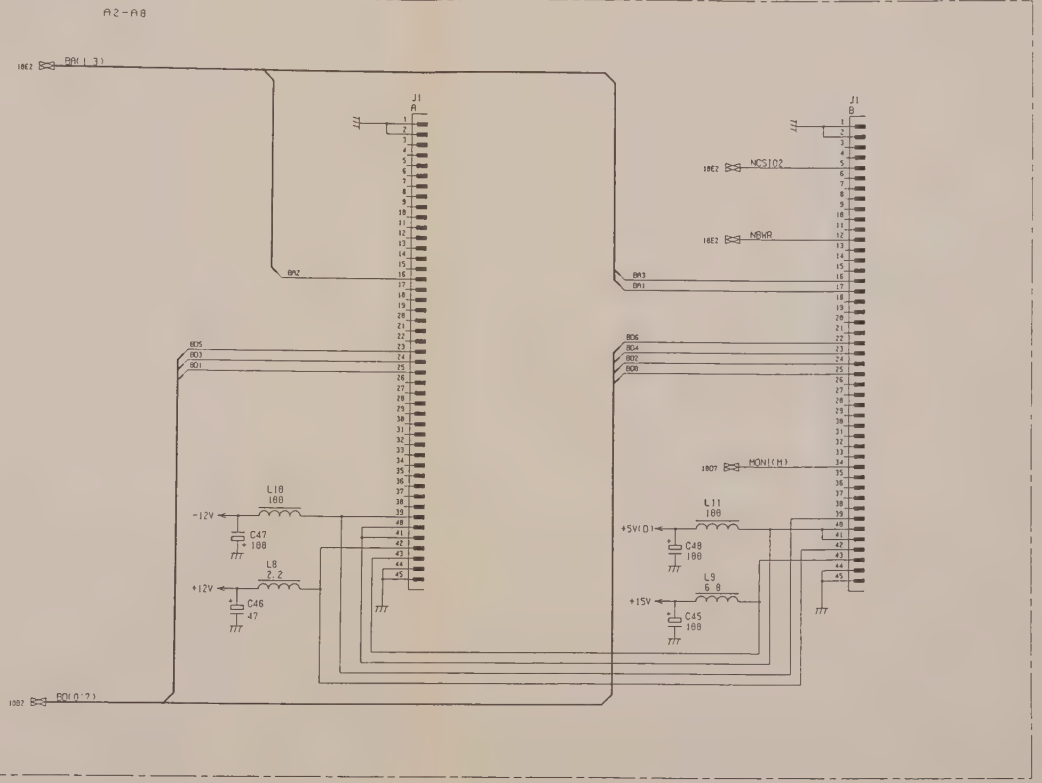

QTY	ITEM	PART No.	DESCRIPTION	MATERIAL	FINISH

CHECKED BY NAKAZAWA	DRAWN BY NISHIGUTI	SCALE :	
APPROVED BY TODA	DESIGNED BY YOSHIDA		

TITLE
A2
RF INPUT & IFAMP

DRAWING No.
43W35217

DEP

ANRITSU CORP.

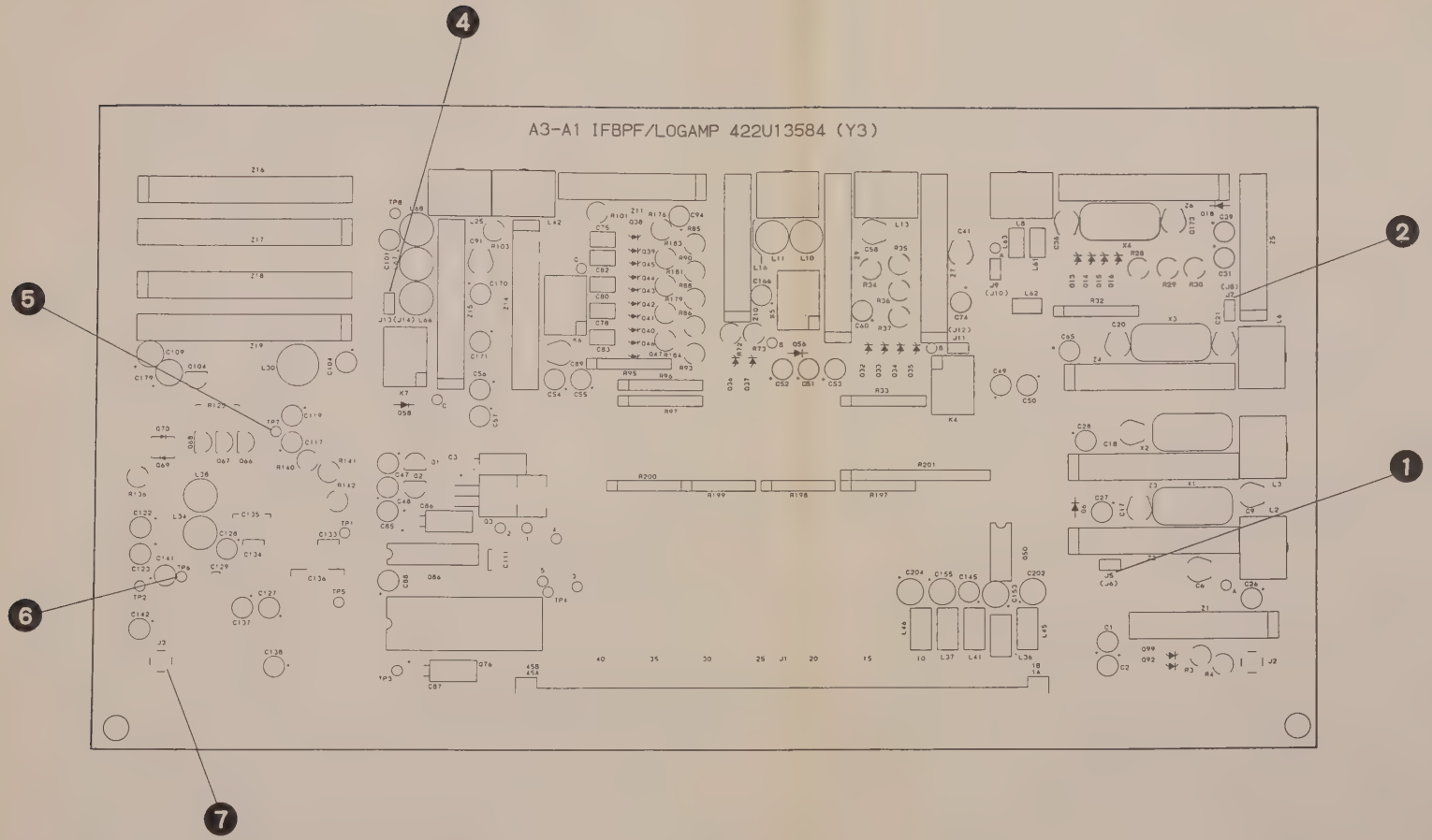

A3 IF BPF & LOG
PC Board Parts Layout 16 (1)

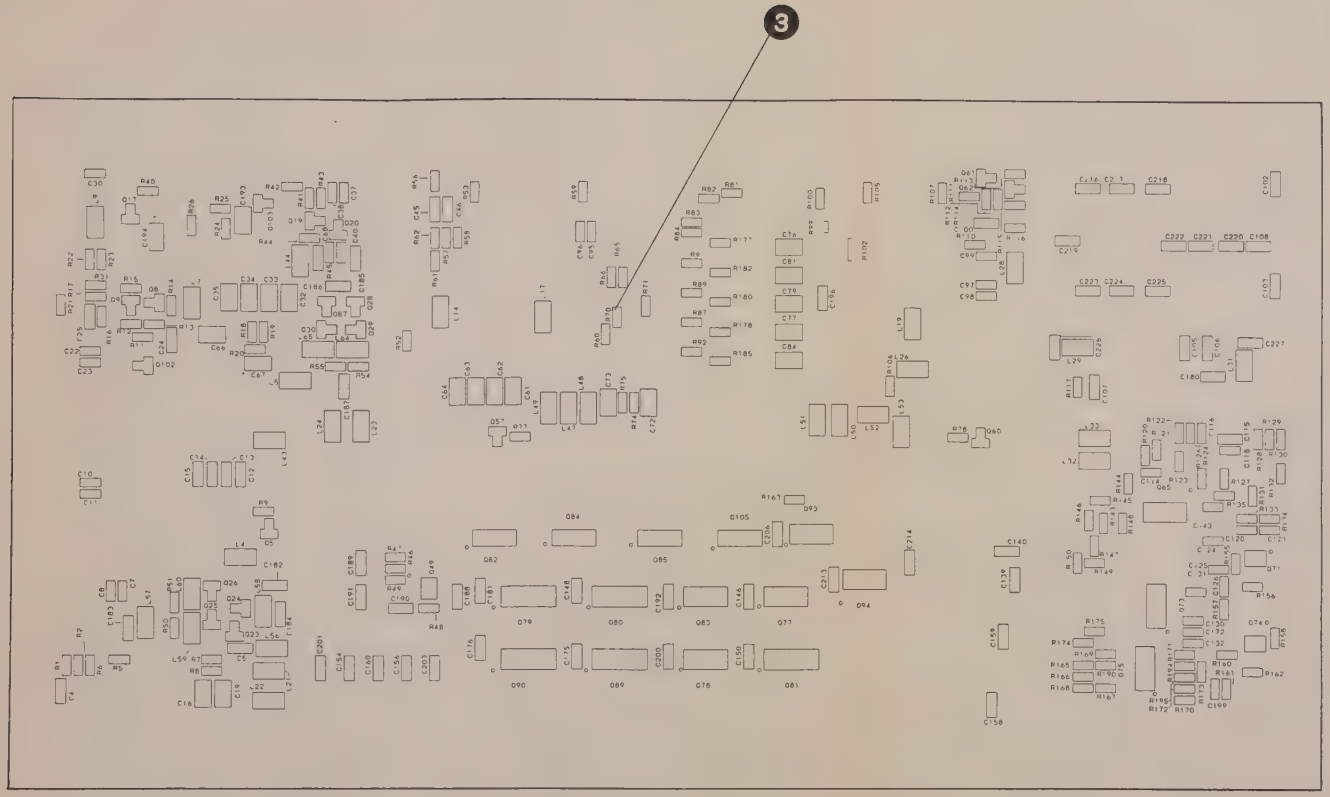

A3 IF BPF & LOG
PC Board Parts Layout **16** (2)

43W35218

APPLICATION

REVISIONS

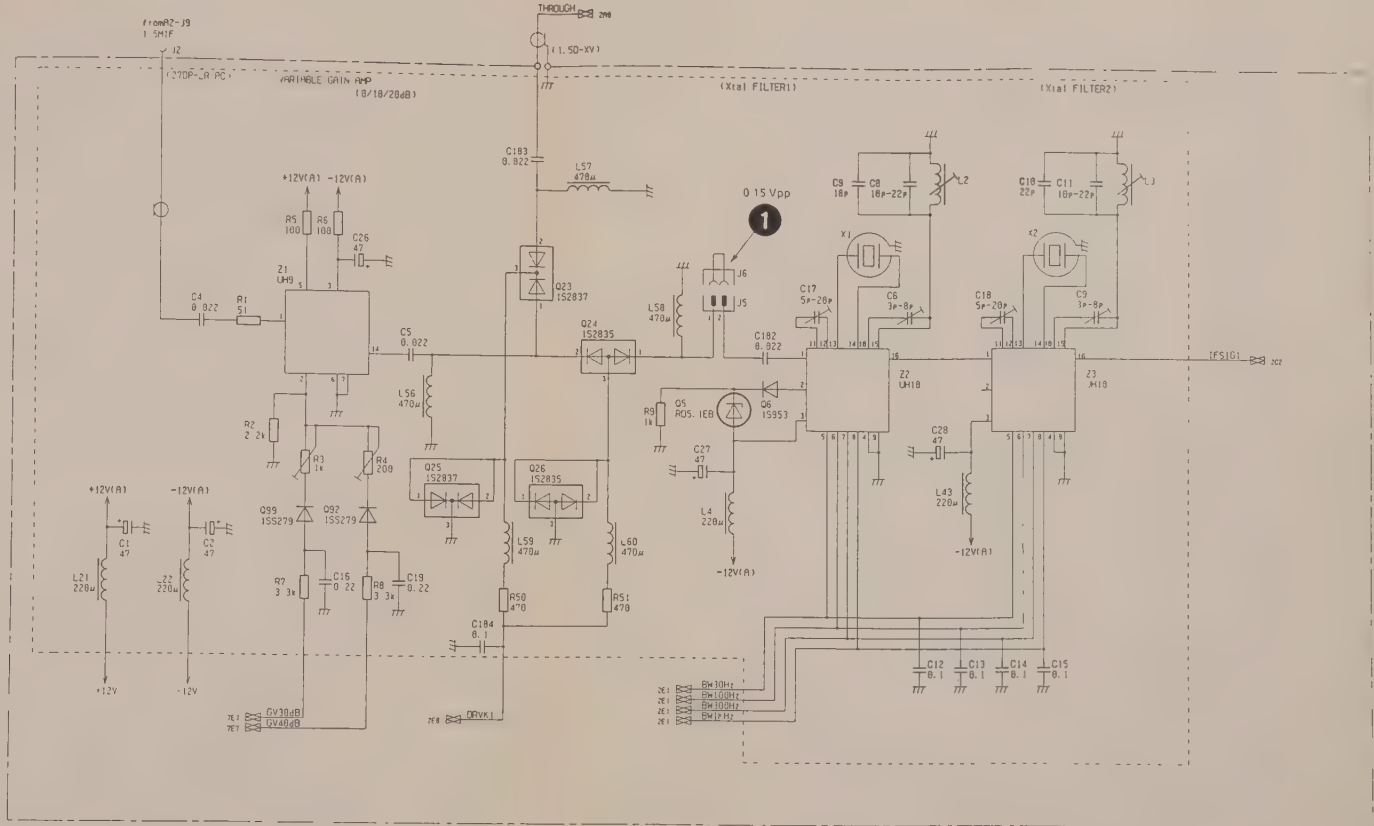

QTY	ITEM	PART No.	DESCRIPTION	MATERIAL	FINISH

CHECKED BY NAKAZAWA	DRAWN BY IWASAWA	SCALE	
APPROVED BY TODA	DESIGNED BY NAKAMURA		

TITLE: A3 IF BPD & LOG

DRAWING No. 43W35218 1/8

PARTS LIST 44W86743

DEP

16

ANRITSU CORP.

3-223/3-224

APPLICATION

REVISIONS

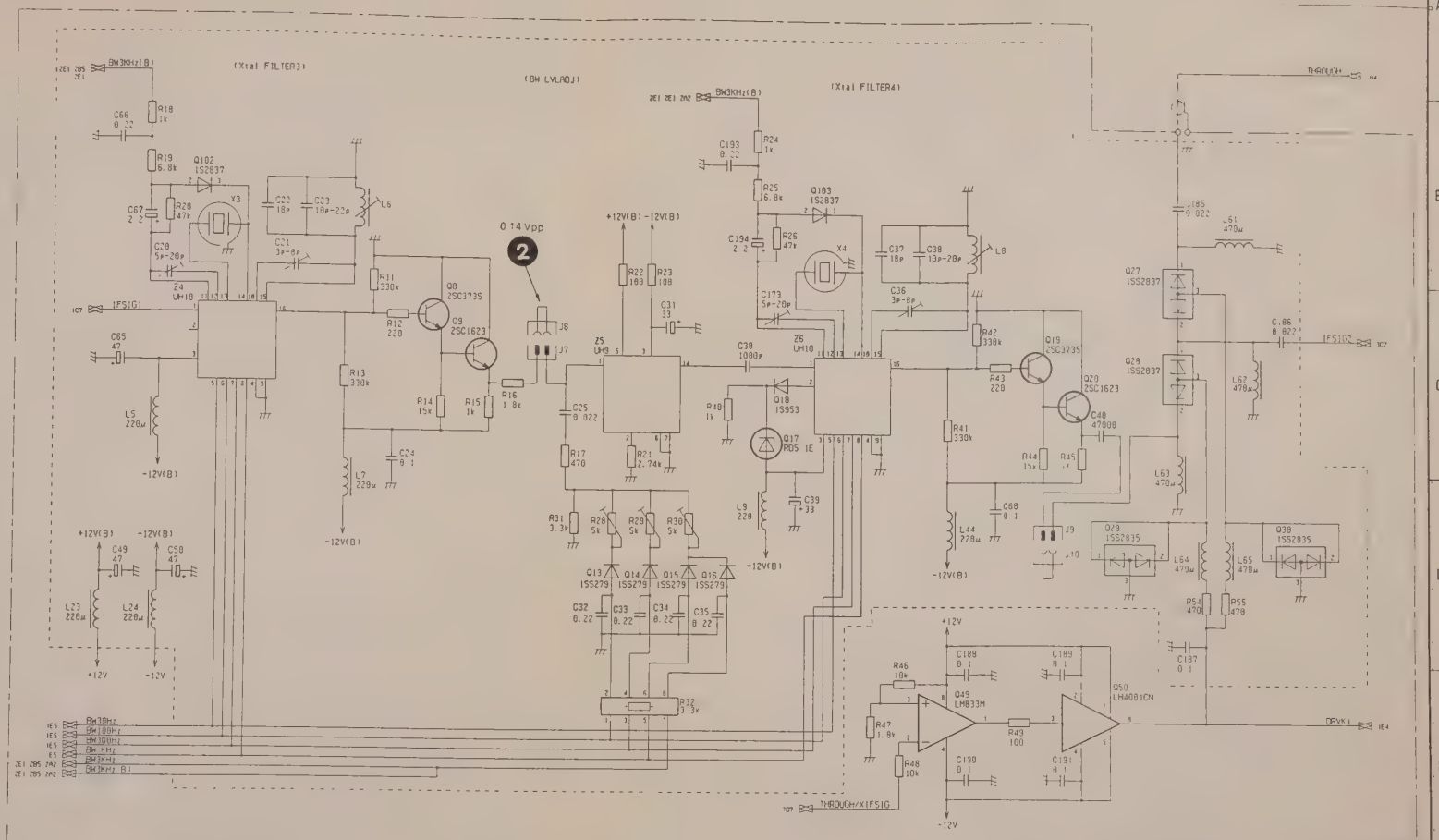

QTY	ITEM	PART No.	DESCRIPTION	MATERIAL	FINISH

CHECKED BY NAKAZAWA	DRAWN BY IWASAWA	SCALE :	
APPROVED BY TODA	DESIGNED BY NAKAMURA		

TITLE: A3 IF BPD & LOG

DRAWING No. 43W35218 2/8

DEP

16

APPLICATION

REVISIONS

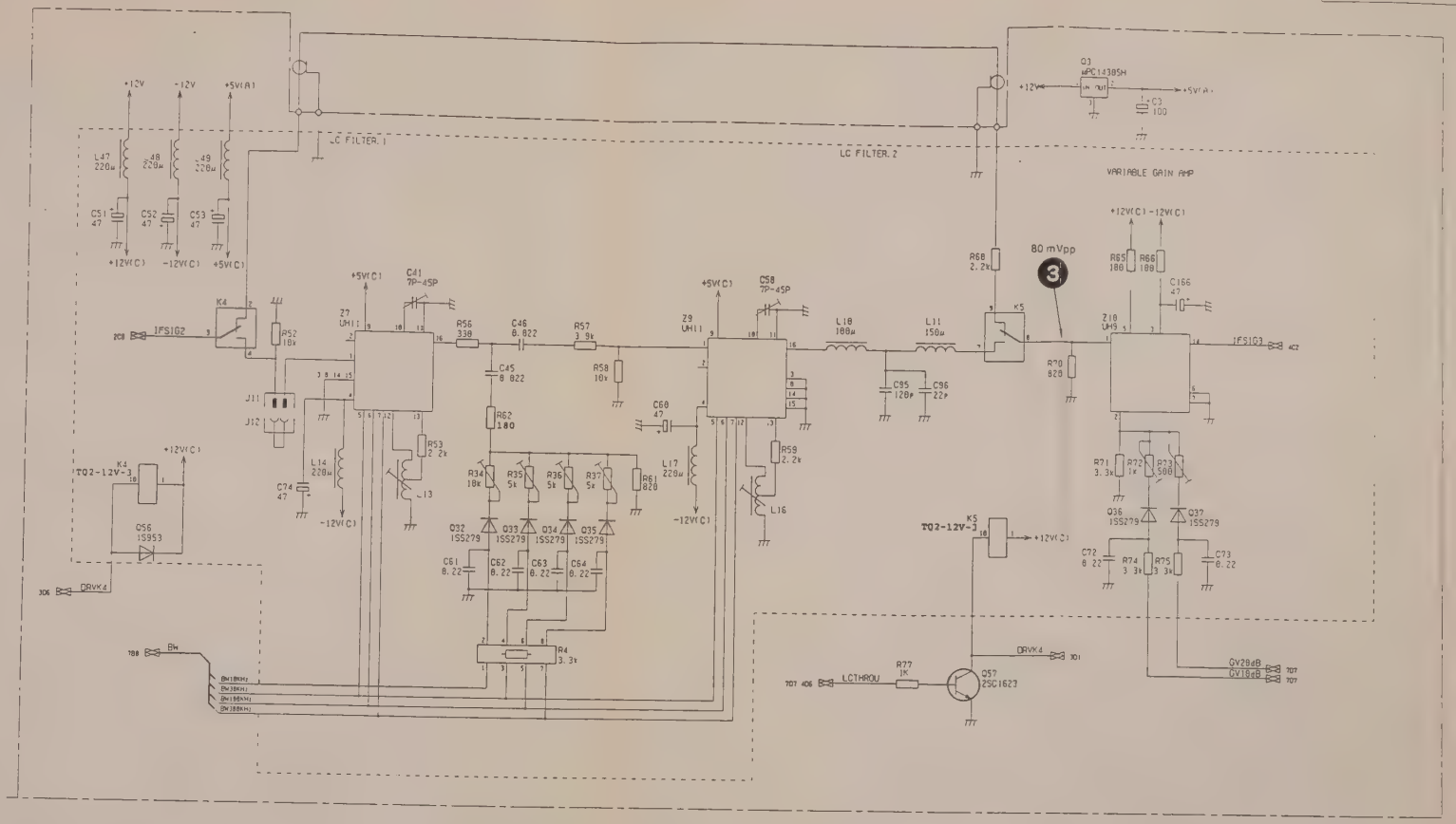

QTY	ITEM	PART No.	DESCRIPTION	MATERIAL	FINISH

CHECKED BY NAKAZAWA	DRAWN BY IWASAWA	SCALE :	
APPROVED BY TODA	DESIGNED BY NAKAMURA		

TITLE: A3 IF BPD & LOG

DRAWING No. 43W35218 3/8

16

DEP

APPLICATION

REVISIONS

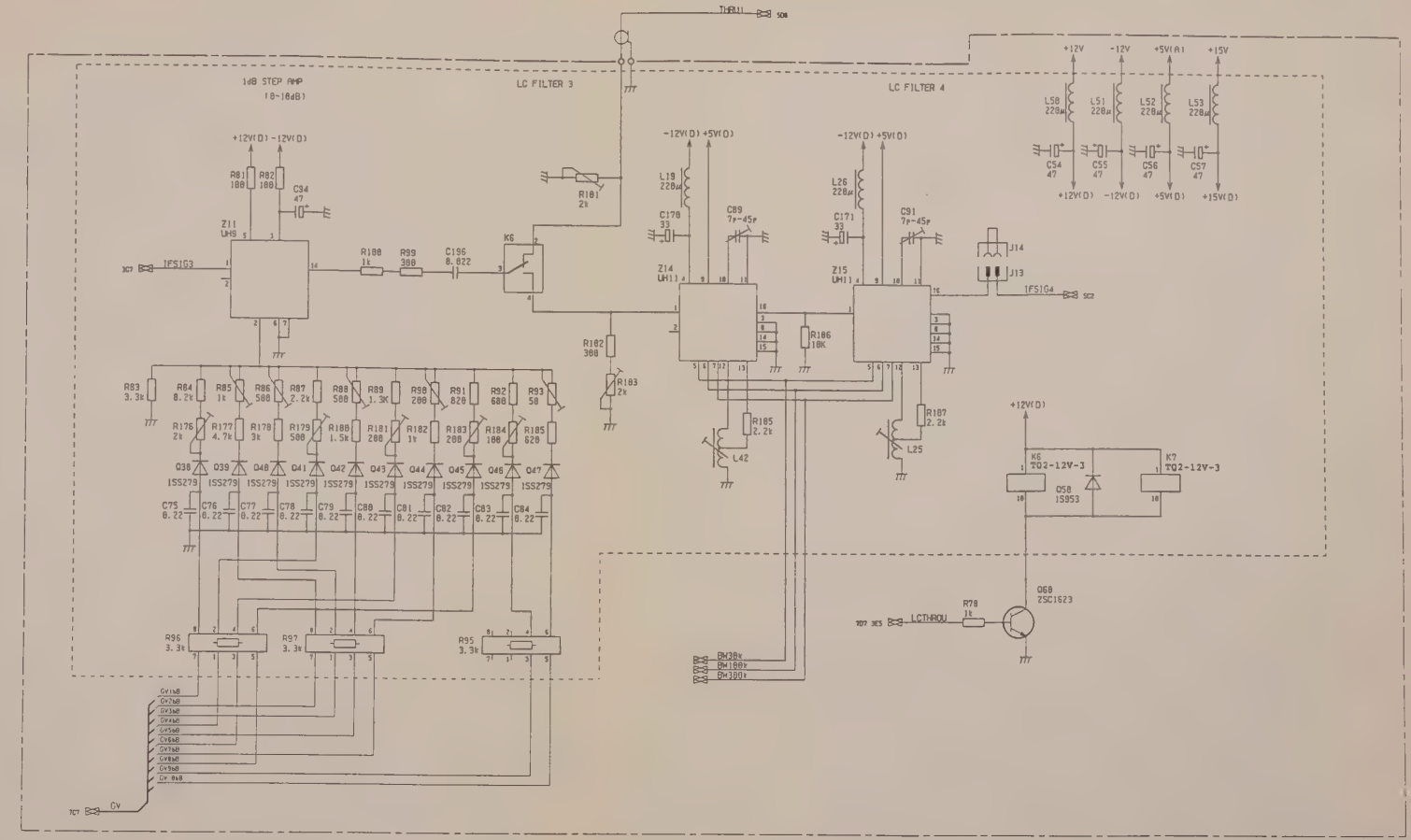

QTY	ITEM	PART No.	DESCRIPTION	MATERIAL	FINISH

CHECKED BY NAKAZAWA	DRAWN BY IWASAWA	SCALE :	
APPROVED BY TODA	DESIGNED BY NAKAMURA		
TITLE A3 IF BPD & LOG		DRAWING No. 43W35218	4/8

16

DEP

ANRITSU CORP.

APPLICATION

REVISIONS

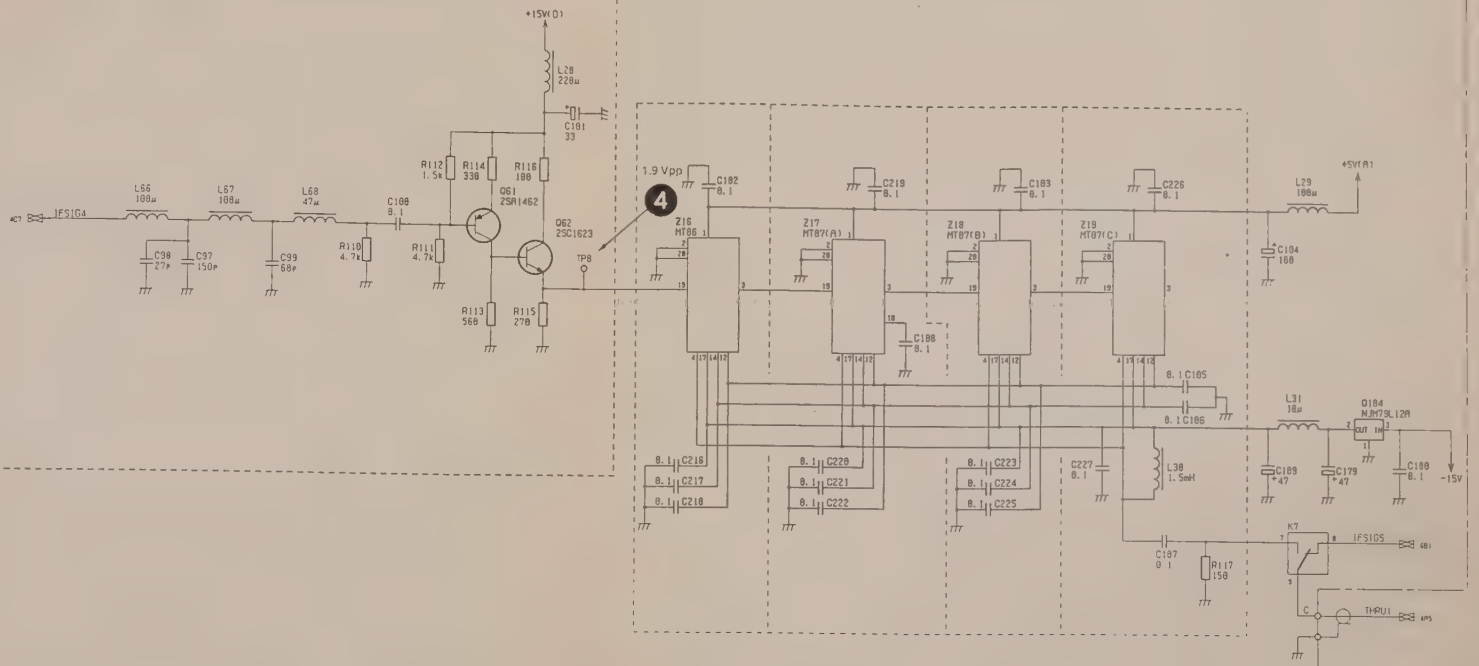

QTY	ITEM	PART No.	DESCRIPTION	MATERIAL	FINISH

CHECKED BY NAKAZAWA	DRAWN BY IWASAWA	SCALE :	
APPROVED BY TODA	DESIGNED BY NAKAMURA		

TITLE: A3 IF BPD & LOG

DRAWING No. 43W35218 5/

DEP

ANRITSU CORP.

APPLICATION

REVISIONS

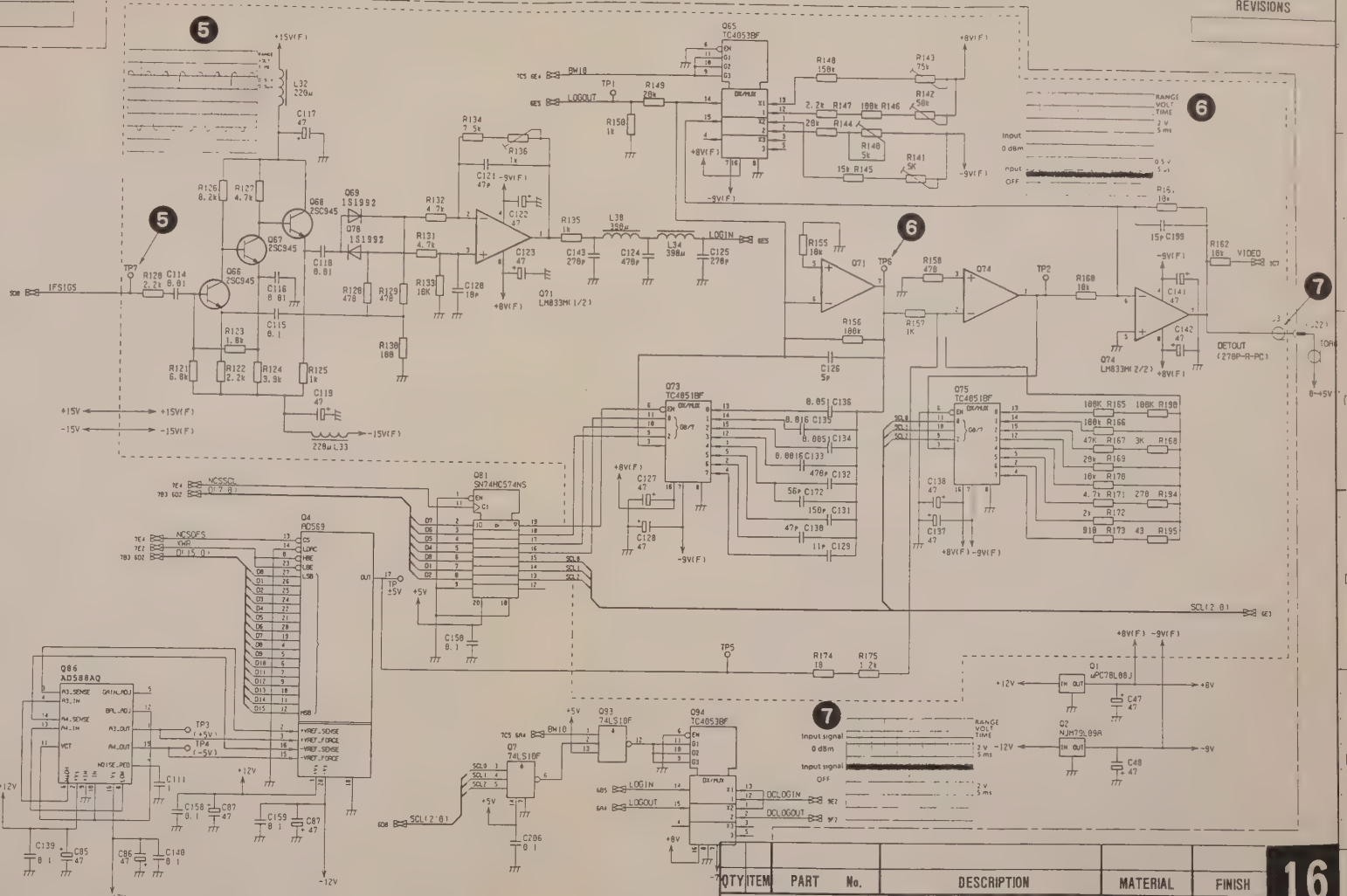

QTY	ITEM	PART No.	DESCRIPTION	MATERIAL	FINISH

CHECKED BY NAKAZAWA	DRAWN BY IWASAWA	SCALE :	
APPROVED BY TODA	DESIGNED BY NAKAMURA		

TITLE: A3 IF BPD & LOG

DRAWING No. 43W35218

DEP

ANRITSU CORP.

APPLICATION

REVISIONS

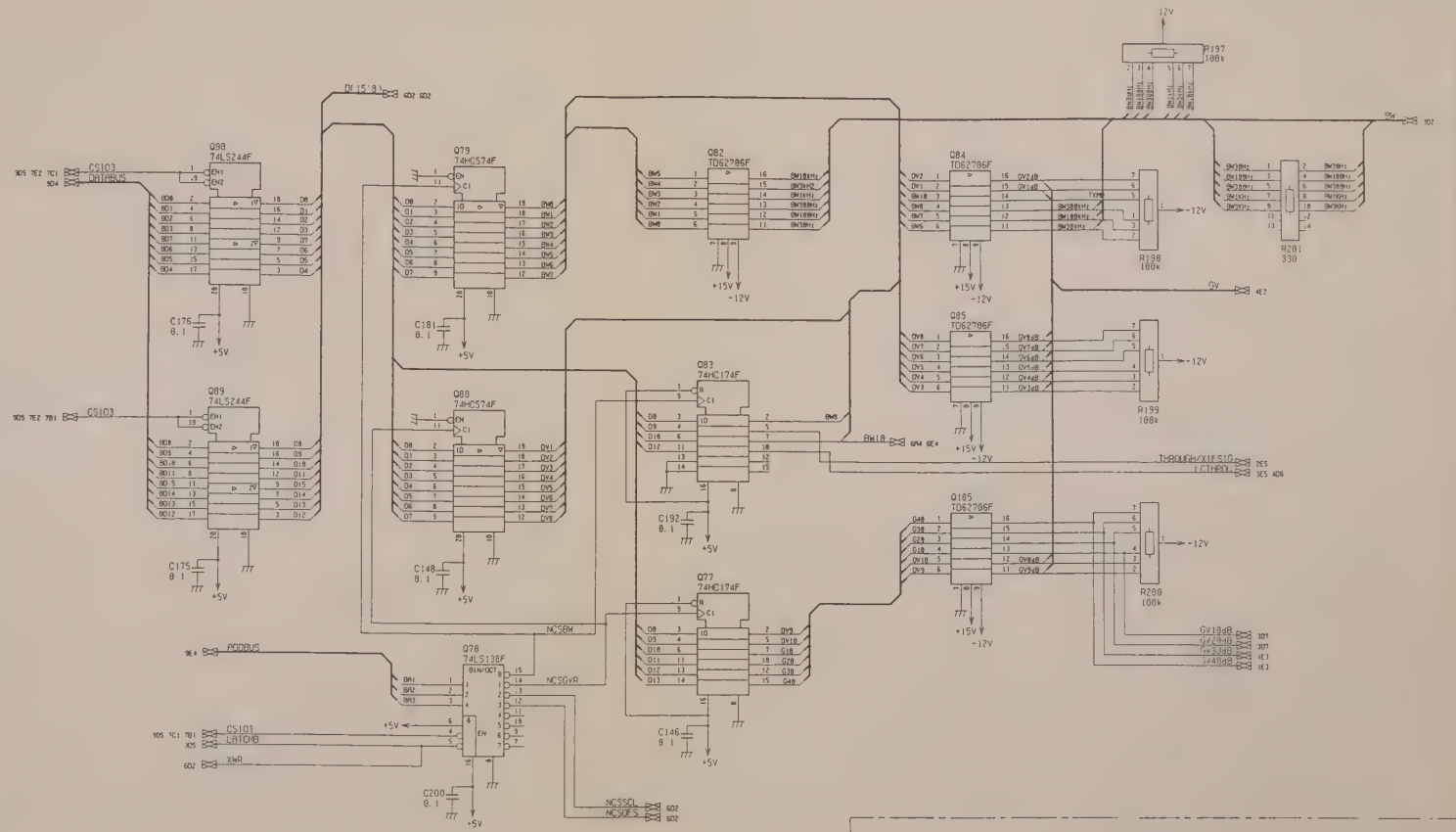

QTY	ITEM	PART No.	DESCRIPTION	MATERIAL	FINISH

CHECKED BY NAKAZAWA	DRAWN BY IWASAWA	SCALE :	
APPROVED BY TODA	DESIGNED BY NAKAMURA		

TITLE: A3 IF BPD & LOG

DRAWING No. 43W35218 7/8

16

DEP

ANRITSU CORP.

APPLICATION

REVISIONS

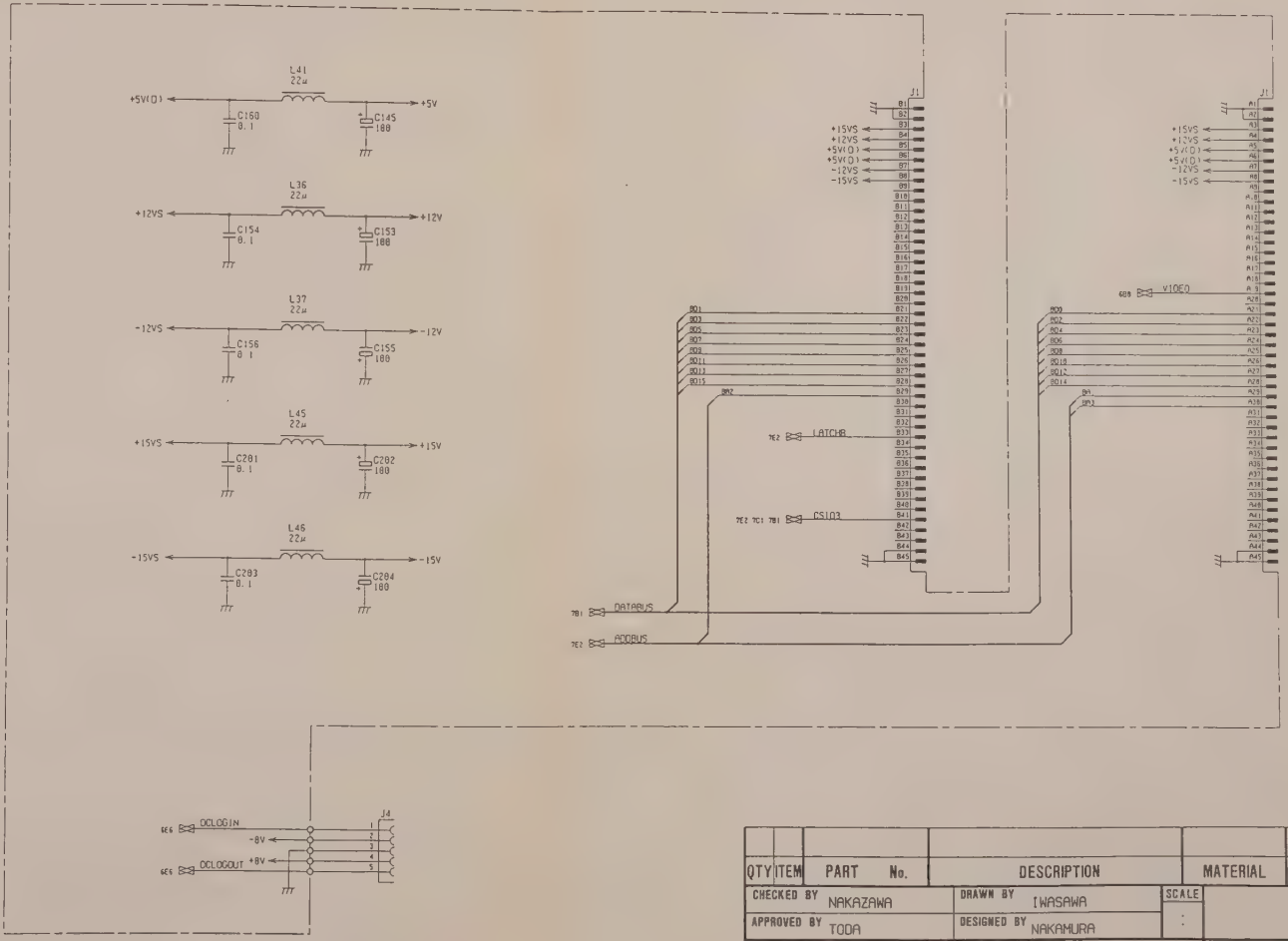

QTY	ITEM	PART No.	DESCRIPTION	MATERIAL	FINISH

CHECKED BY	NAKAZAWA	DRAWN BY	IWASAWA
APPROVED BY	TODA	DESIGNED BY	NAKAMURA

SCALE :

TITLE: A3 IF BPD & LOG

DRAWING No. 43W35218

16

DEP

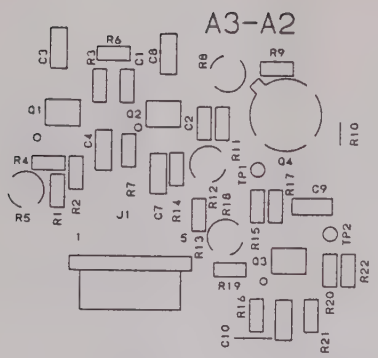

A3-A2 LOG AMP-2 PC Board Parts Layout **17**

APPLICATION

REVISIONS

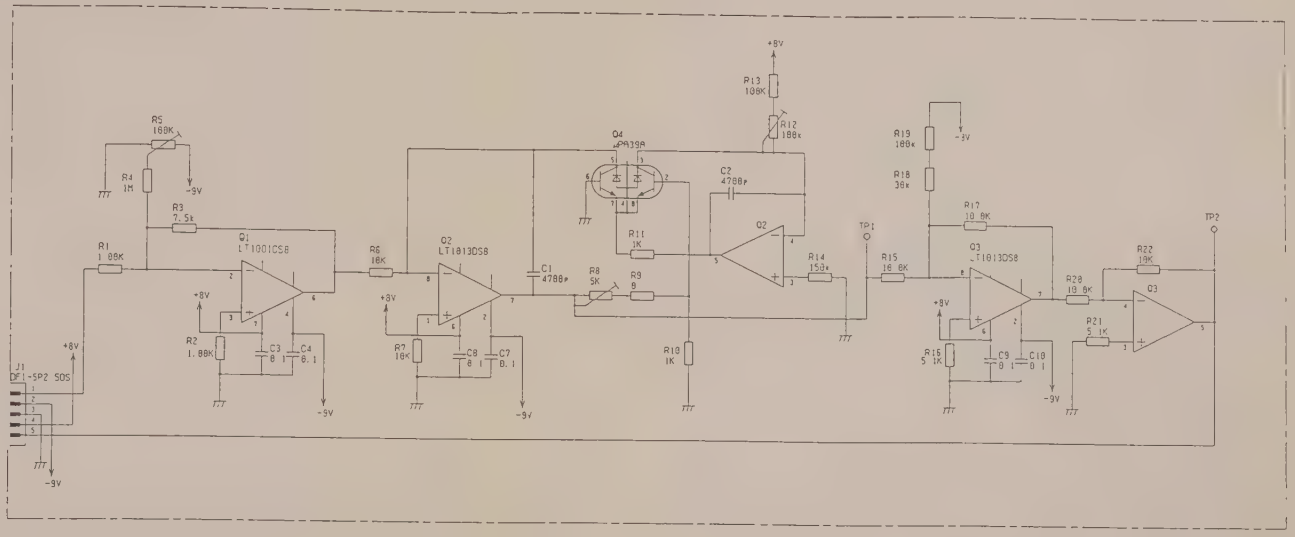

QTY	ITEM	PART No.	DESCRIPTION	MATERIAL	FINISH

17

CHECKED BY NAKAZAWA	DRAWN BY IWASAWA	SCALE :	
APPROVED BY TODA	DESIGNED BY NAKAMURA		

TITLE: RX A3-A2 LOG AMP-2

DRAWING No. 43W39917 1/1

PARTS LIST 44W95147

DEP

ANRITSU CORP.

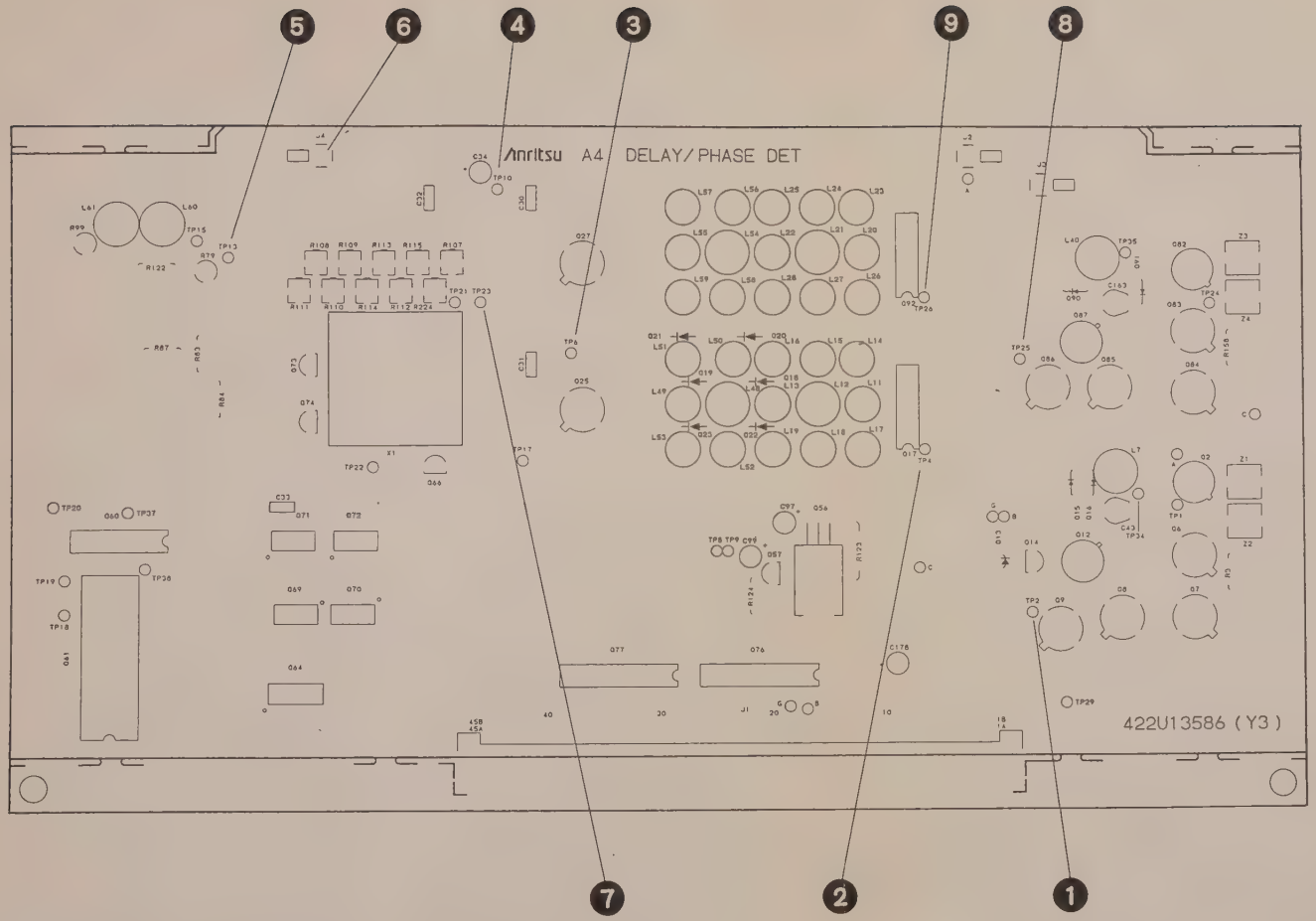

A4 DEALY & PHASE
DETECTOR PC Board Parts Layout **18** (1/2)

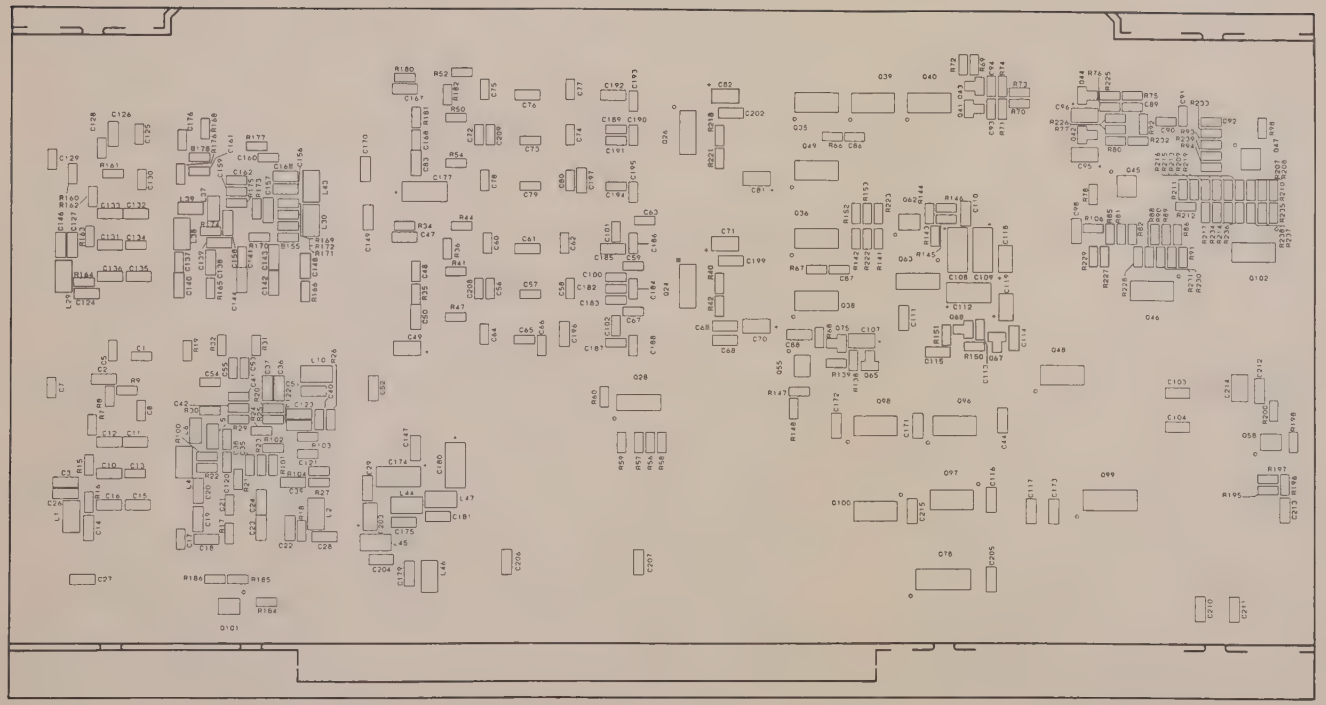

A4 DEALY & PHASE
DETECTOR PC Board Parts Layout **18** (2/2)

APPLICATION

REVISIONS

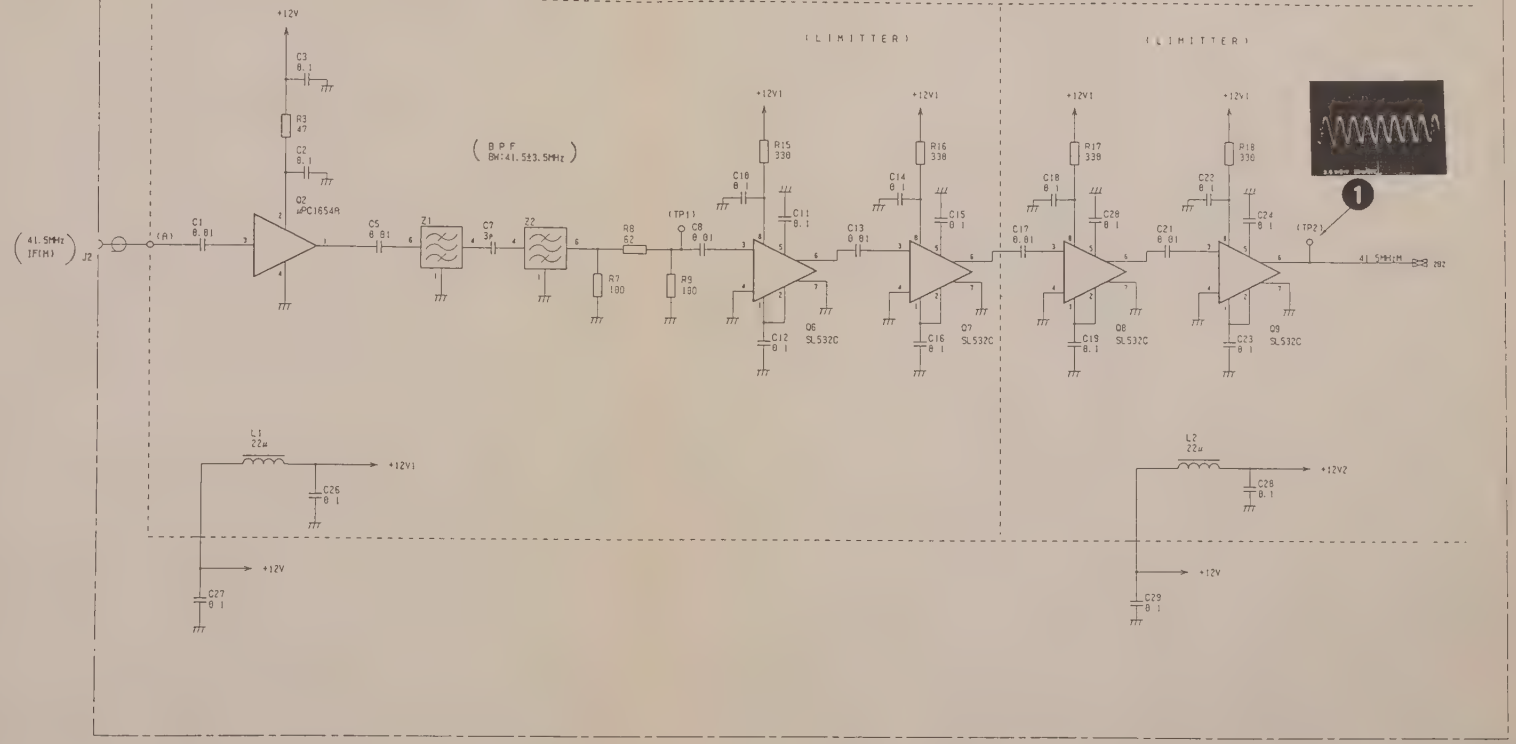

QTY	ITEM	PART No.	DESCRIPTION	MATERIAL	FINISH

18

CHECKED BY NAKAZAWA	DRAWN BY NISHIGUTI	SCALE :	
APPROVED BY TODA	DESIGNED BY YOSHIDA		

PARTS LIST 44W86744

TITLE A4 DELAY & PHASE DETECTOR

DRAWING No. 43W35219 1/9

DEP

ANRITSU CORP.

43W35219

APPLICATION

REVISIONS

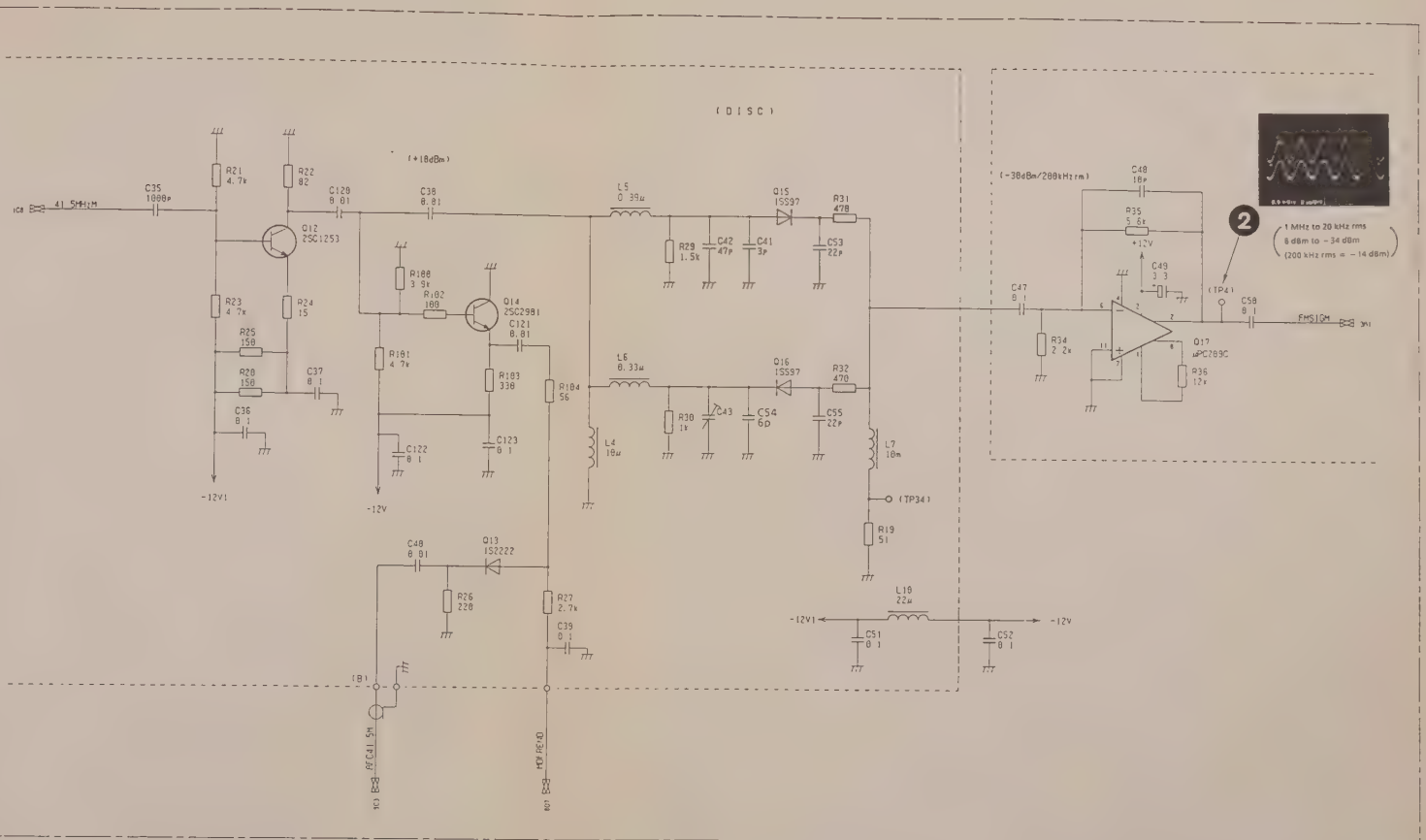

QTY	ITEM	PART No.	DESCRIPTION	MATERIAL	FINISH

CHECKED BY NAKAZAWA	DRAWN BY NISHIGUTI	SCALE :	18
APPROVED BY TODA	DESIGNED BY YOSHIDA		
TITLE A4 DELAY & PHASE DETECTOR		DRAWING No. 43W35219	2/3

DEP

ANRITSU CORP.

APPLICATION

REVISIONS

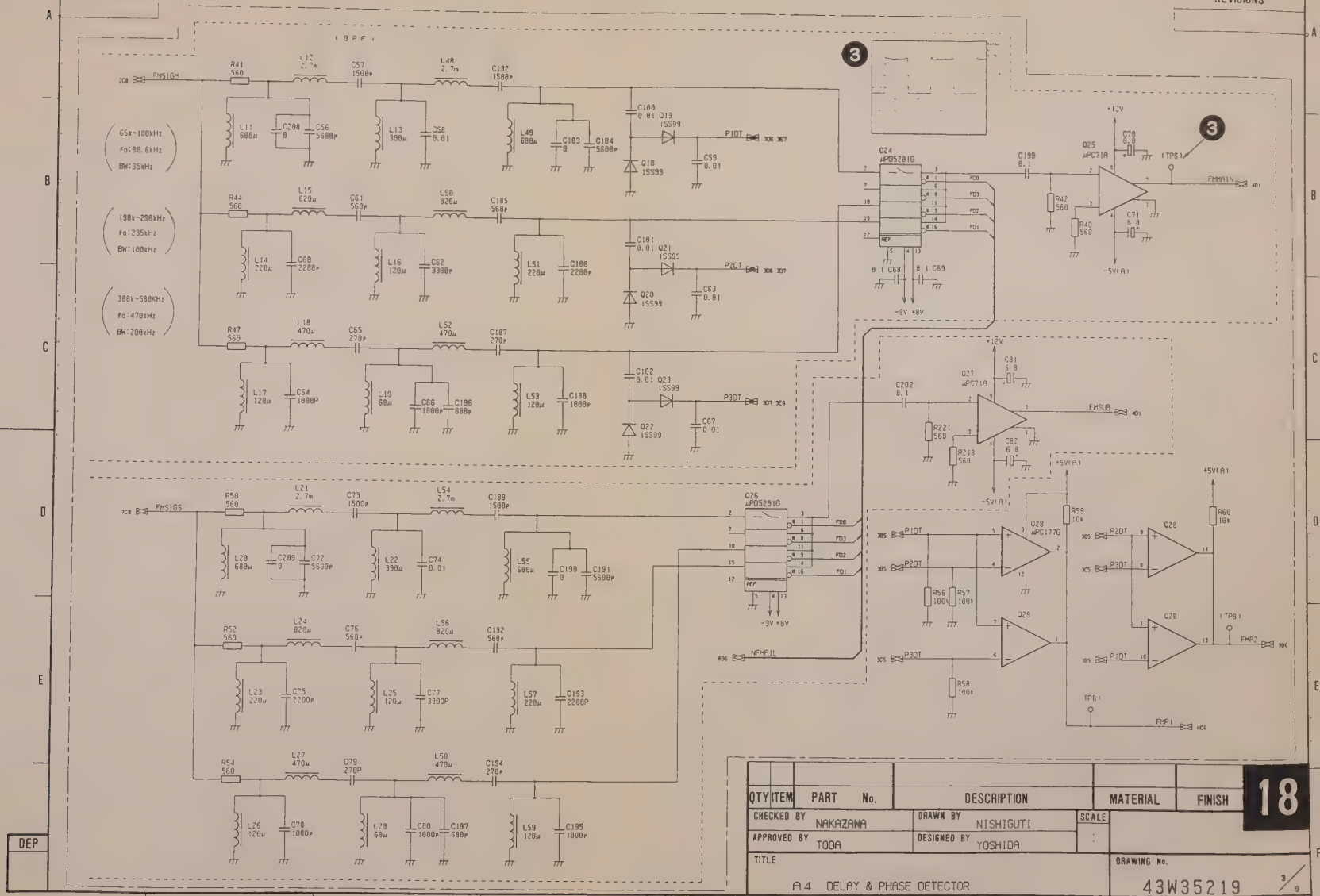

QTY	ITEM	PART No.	DESCRIPTION	MATERIAL	FINISH

CHECKED BY NAKAZAWA	DRAWN BY NISHIGUTI	SCALE	
APPROVED BY TODA	DESIGNED BY YOSHIDA		

TITLE: A4 DELAY & PHASE DETECTOR

DRAWING No. 43W35219 3/9

18

DEP

ANRITSU CORP.

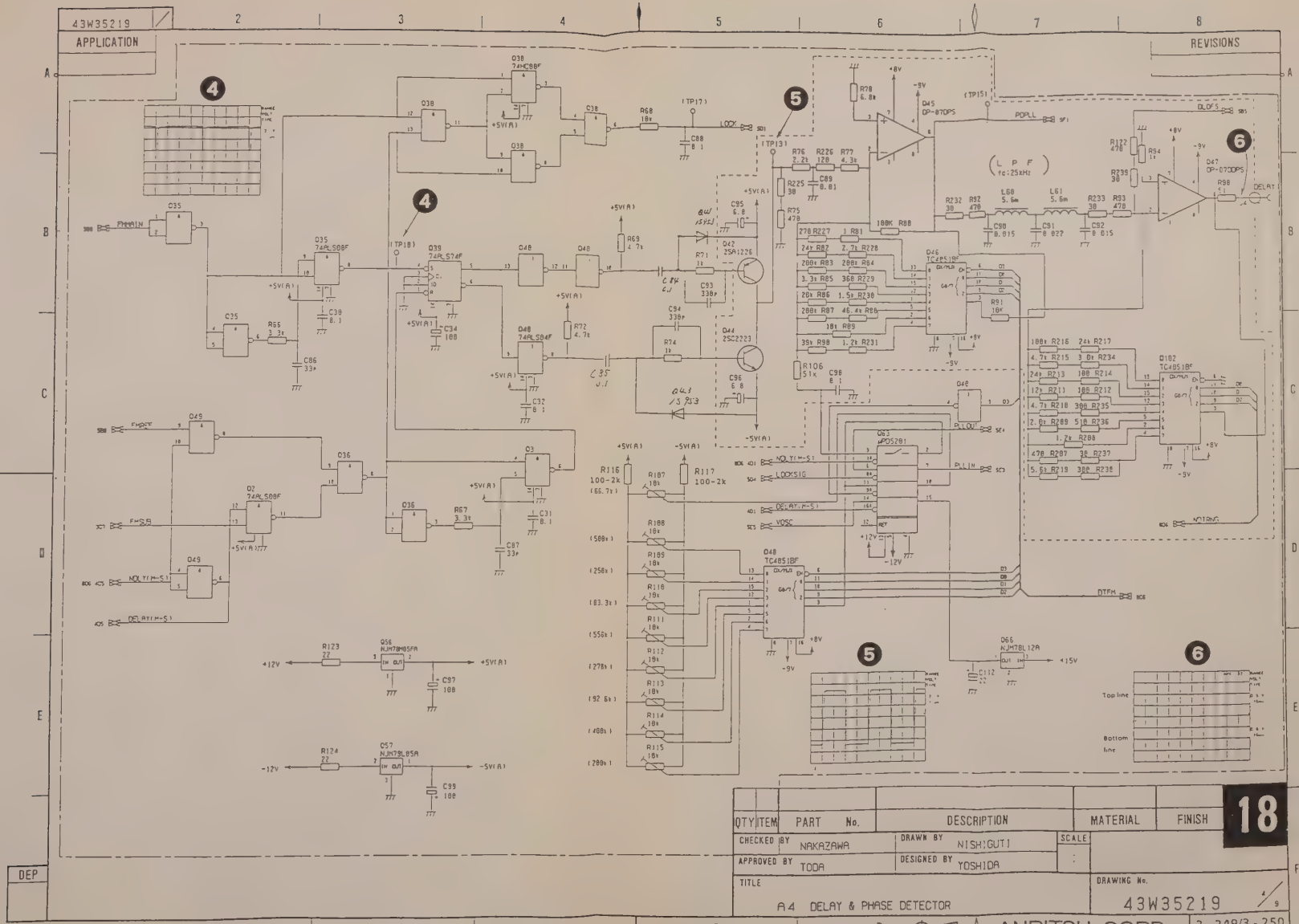
43W35219
APPLICATION
REVISIONS
DEP
Q38 74HC08F
Q35 74AR_S08F
Q39 74AR_S74F
Q48 74AR_S04F
Q49
Q2 74AR_S08F
Q36
Q3
Q42 2SA1226
Q44 2SC2223
Q45 OP-07DPS
Q47 OP-07DPS
Q46 TC4051BF
Q48 TC4051BF
Q102 TC4051BF
Q63 PD5281
Q56 NJM78M05FA
Q57 NJM79L05A
D66 NJM78L12A
D42 1S913
D44 1S913
LOCK
DLOFS
POPLL
DELAT
PLOUT
PLIN
DTFM
LOCKSIG
VOSC
Top line
Bottom line
ANRITSU CORP.
3-249/3-250
QTY ITEM PART No. DESCRIPTION MATERIAL FINISH
CHECKED BY NAKAZAWA
DRAWN BY NISHIGUTI
APPROVED BY TODA
DESIGNED BY YOSHIDA
SCALE
TITLE
A4 DELAY & PHASE DETECTOR
DRAWING No.
43W35219
18

APPLICATION

REVISIONS

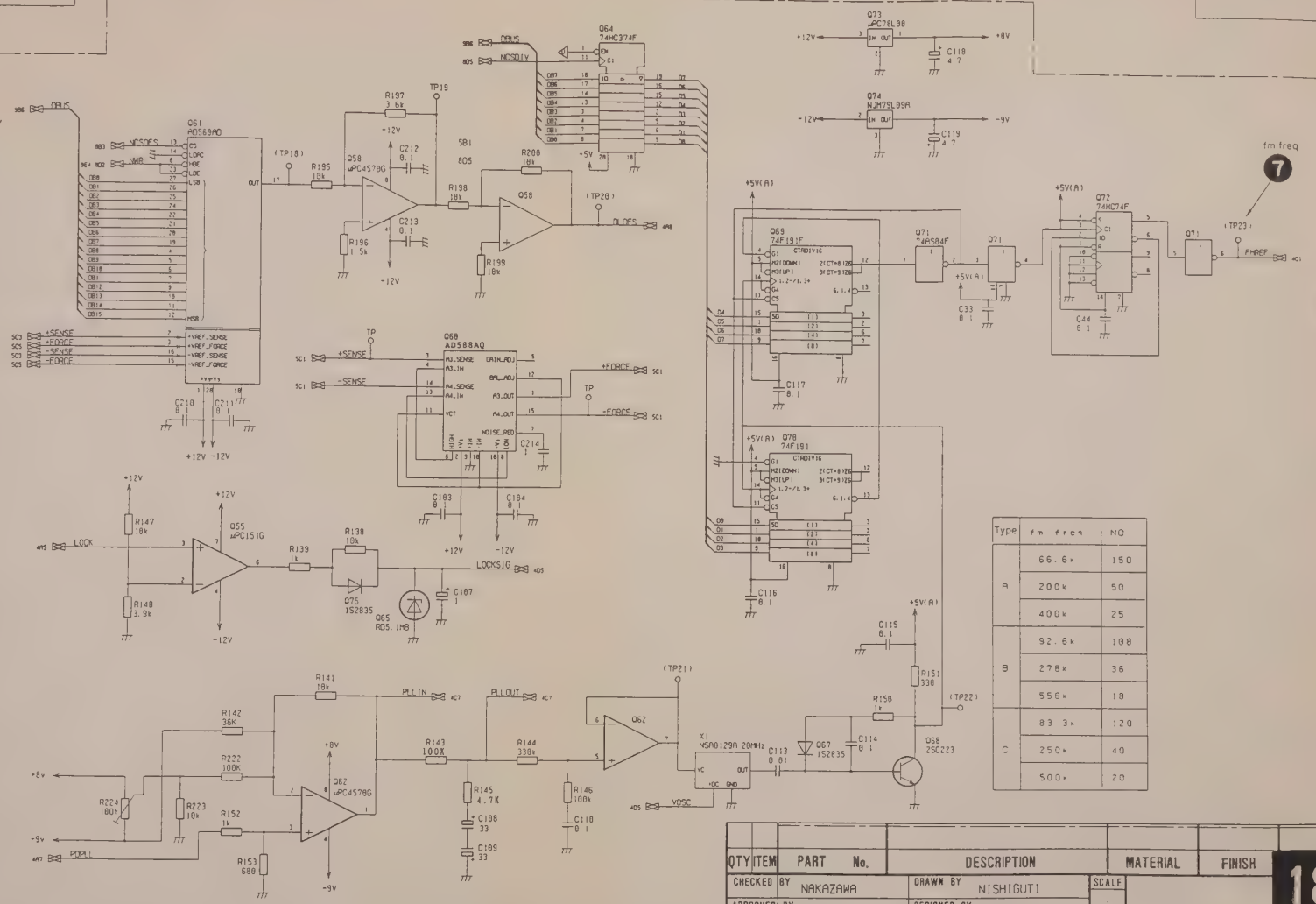

Type	fm freq	NO
A	66.6k	150
	200k	50
	400k	25
B	92.6k	108
	278k	36
	556k	18
C	83.3k	120
	250k	40
	500k	20

QTY	ITEM	PART No.	DESCRIPTION	MATERIAL	FINISH

CHECKED BY	NAKAZAWA	DRAWN BY	NISHIGUTI
APPROVED BY	TODA	DESIGNED BY	YOSHIDA

SCALE :

18

TITLE: A4 DELAY & PHASE DETECTOR

DRAWING No. 43W35219 5/9

DEP

APPLICATION

REVISIONS

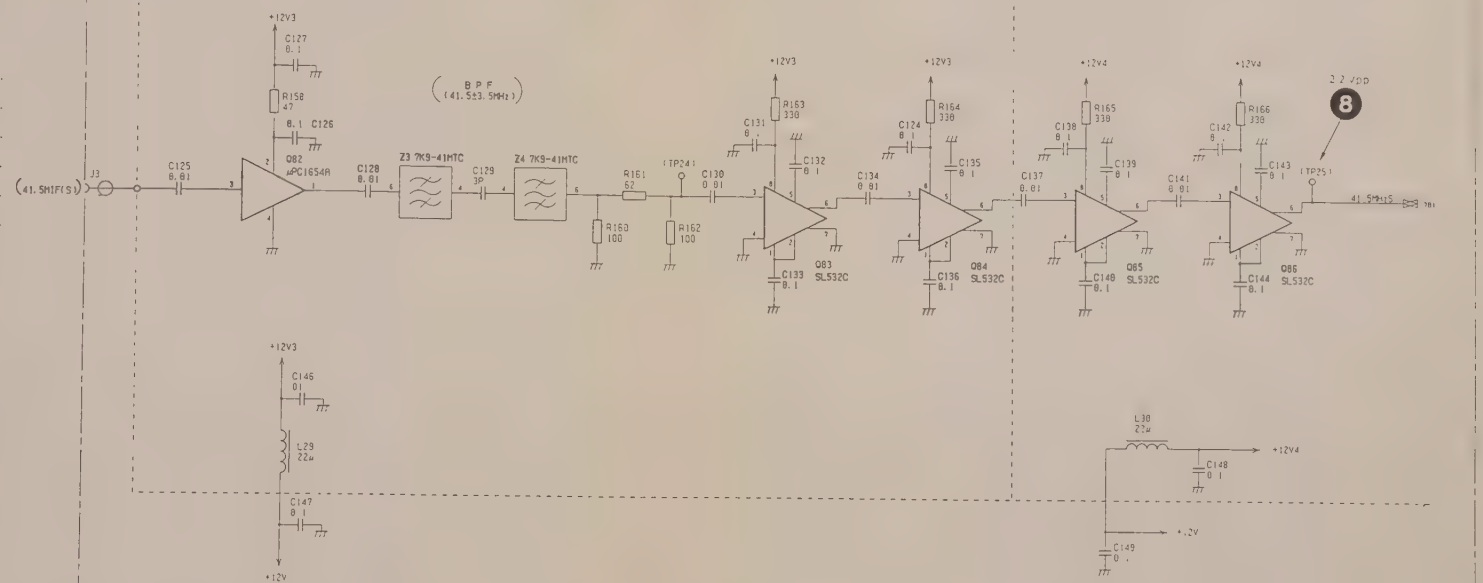

QTY	ITEM	PART No.	DESCRIPTION	MATERIAL	FINISH

CHECKED BY NAKAZAWA	DRAWN BY NISHIGUTI	SCALE :	
APPROVED BY TODA	DESIGNED BY YOSHIDA		

TITLE: A4 DELAY & PHASE DETECTOR

DRAWING No. 43W35219 6/9

18

DEP

APPLICATION

REVISIONS

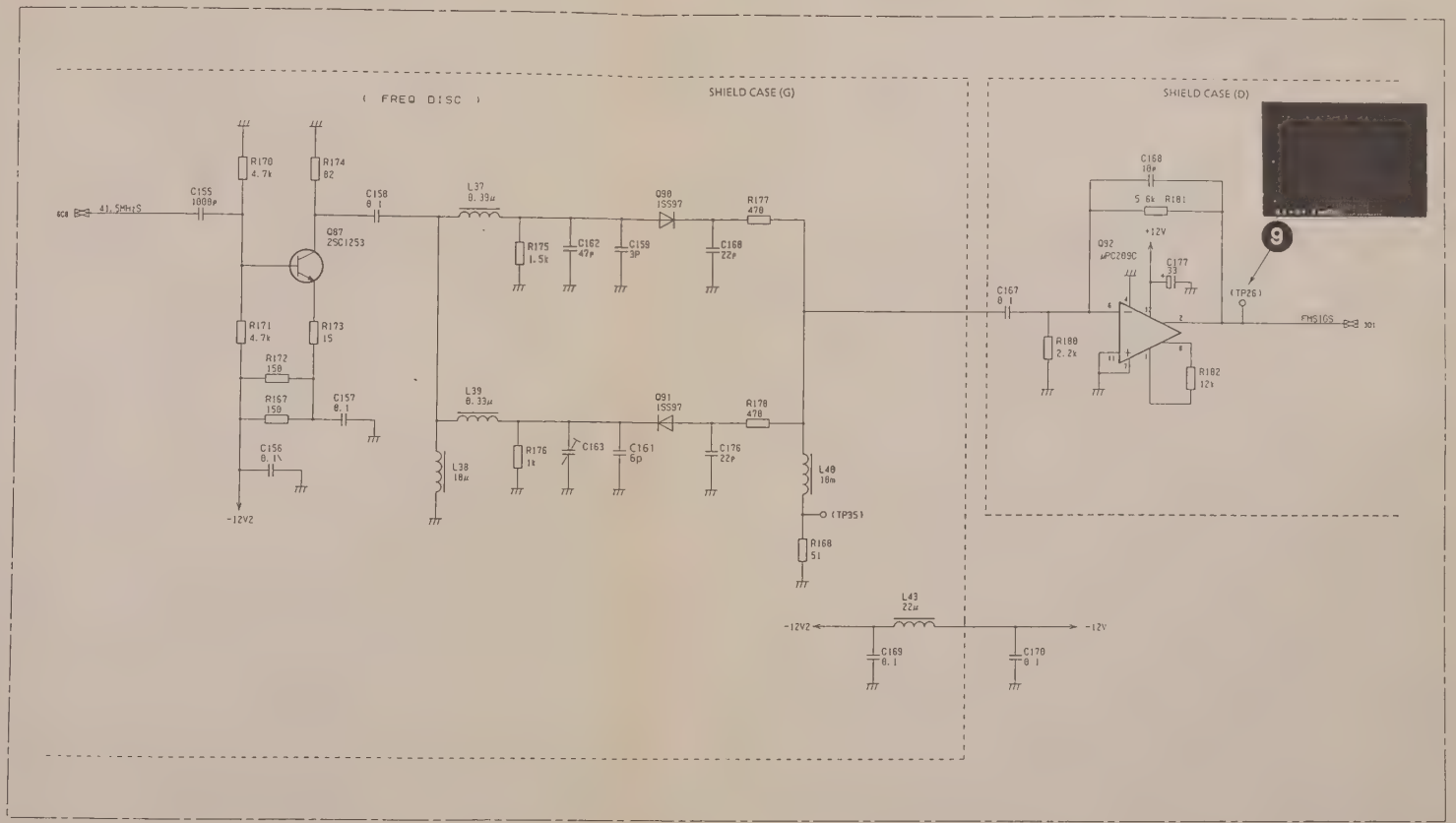

QTY	ITEM	PART No.	DESCRIPTION	MATERIAL	FINISH

18

CHECKED BY NAKAZAWA	DRAWN BY NISHIGUTI	SCALE :	
APPROVED BY TODA	DESIGNED BY YOSHIDA		

TITLE: A4 DELAY & PHASE DETECTOR

DRAWING No. 43W35219 7/9

DEP

ANRITSU CORP.

APPLICATION

REVISIONS

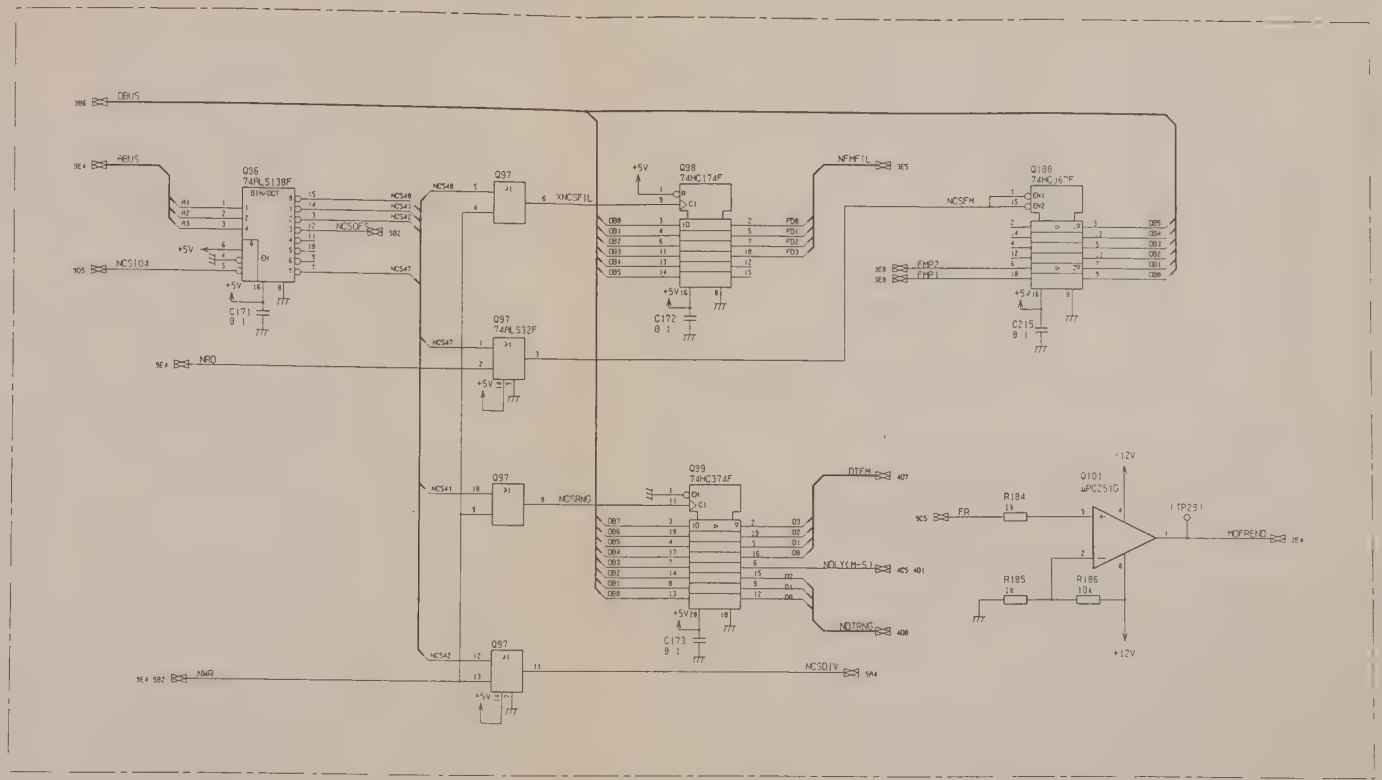

QTY	ITEM	PART No.	DESCRIPTION	MATERIAL	FINISH

CHECKED BY NAKAZAWA	DRAWN BY NISHIGUTI	SCALE :	18
APPROVED BY TODA	DESIGNED BY YOSHIDA		
TITLE A4 DELAY & PHASE DETECTOR		DRAWING No. 43W35219	8/9

DEP

APPLICATION

REVISIONS

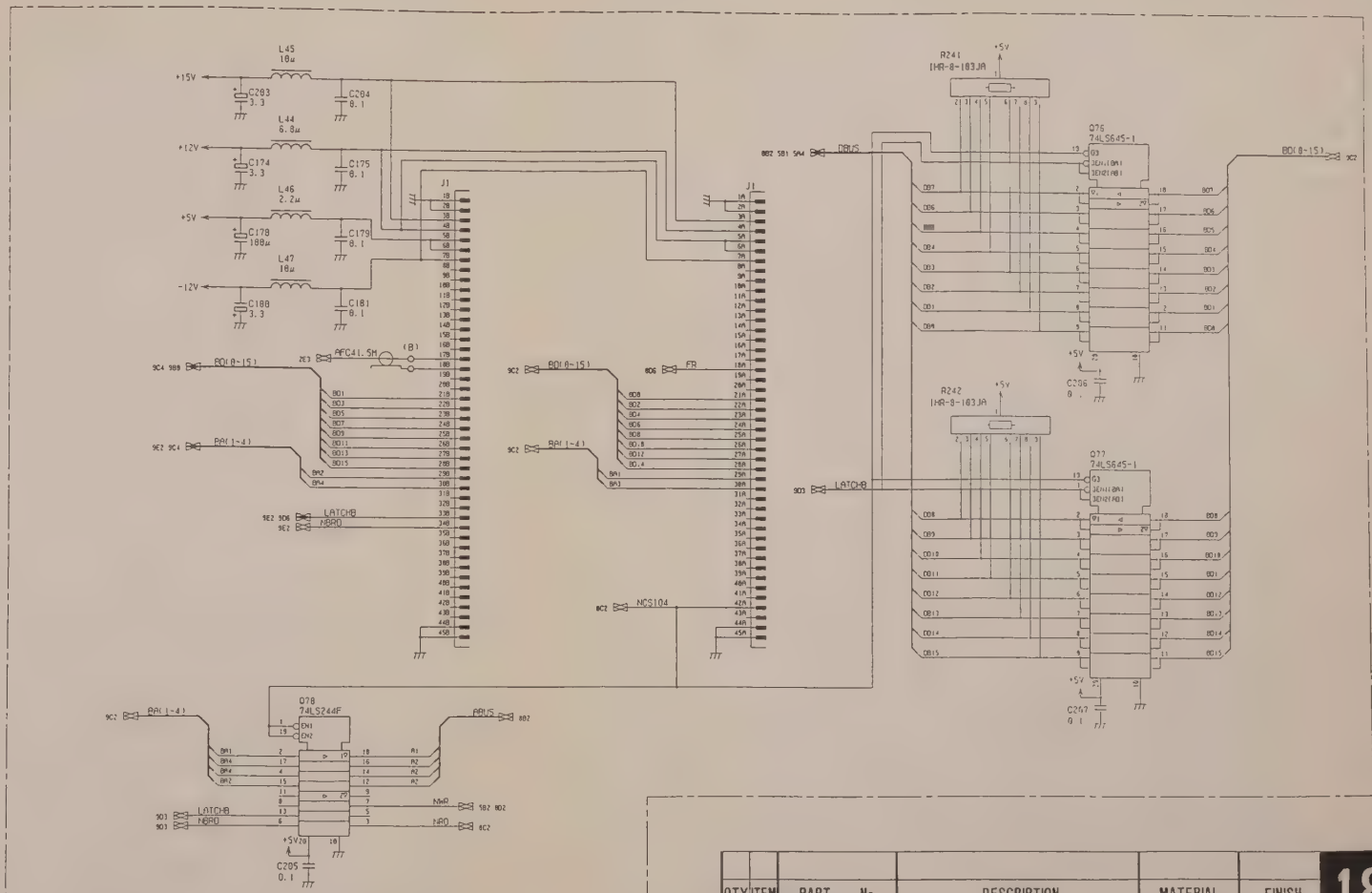

QTY	ITEM	PART No.	DESCRIPTION	MATERIAL	FINISH

CHECKED BY NAKAZAWA	DRAWN BY NISHIGUTI	SCALE :	
APPROVED BY TODA	DESIGNED BY YOSHIDA		

TITLE: A4 DELAY & PHASE DETECTOR

DRAWING No. 43W35219

DEP

18

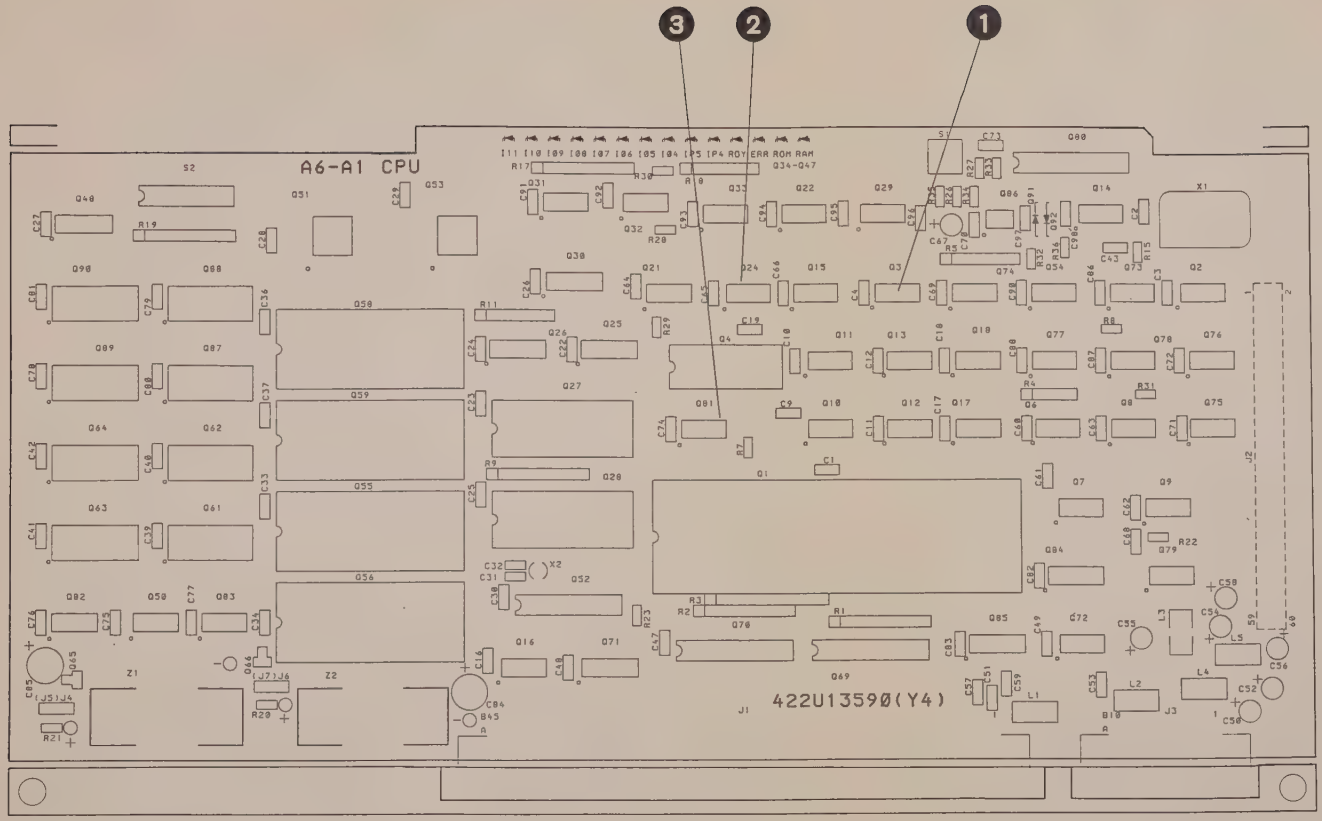

A6-A1 CPU PC Board
Parts Layout 19

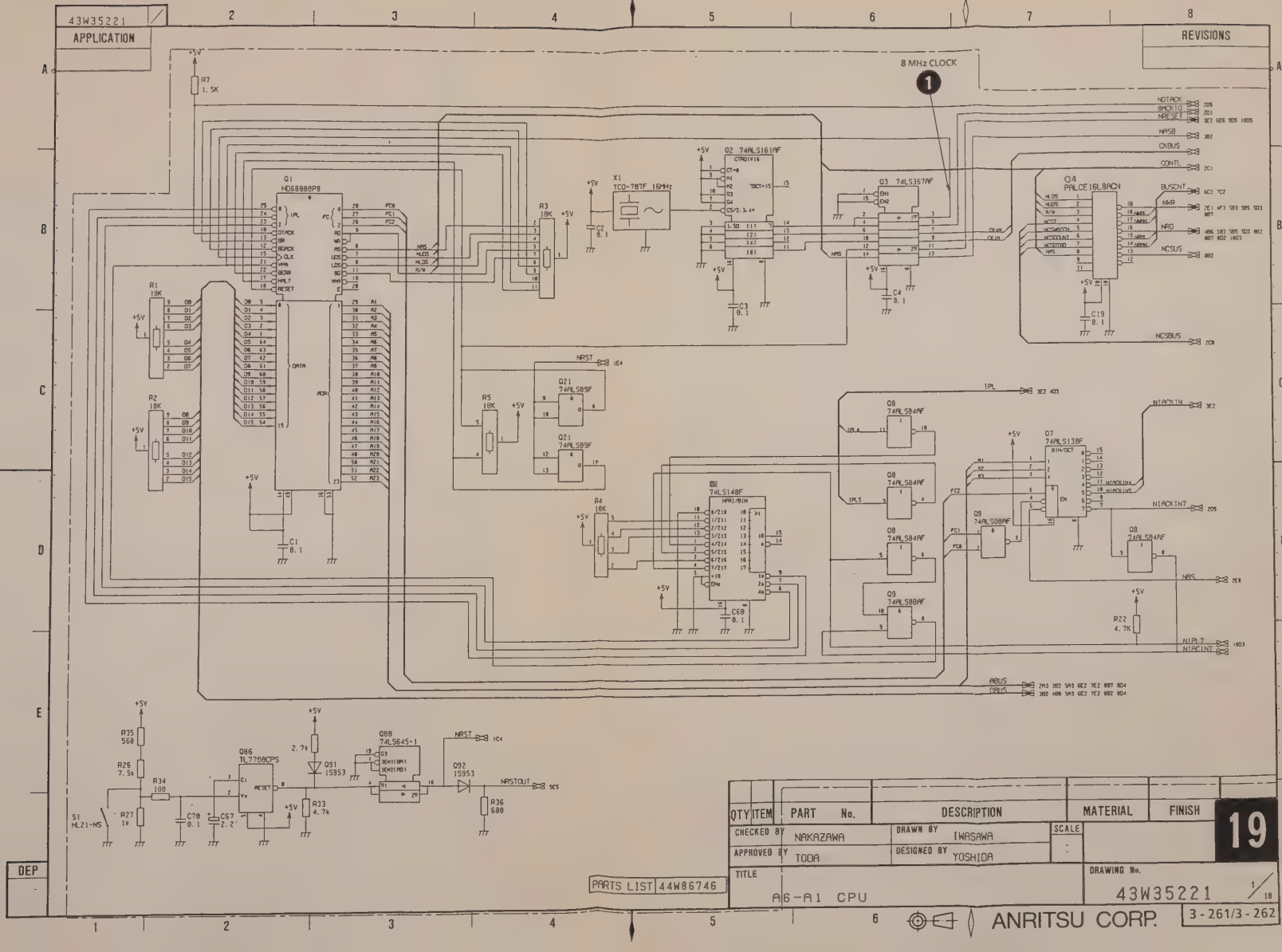
43W35221
APPLICATION
REVISIONS
8.MHz CLOCK
1
Q1 HD68000P8
X1 TCO-787F 16MHz
Q2 74ALS161AF
Q3 74LS367AF
Q4 PALCE16L8ACN
Q5 74ALS14BF
Q6 TL7700ACPS
Q7 74ALS138F
Q8 74ALS04AF
Q9 74ALS08AF
Q10 74ALS645-1
Q21 74ALS89F
Q91 1S953
Q92 1S953
R1 10K
R2 10K
R3 10K
R4 10K
R5 10K
R7 1.5K
R22 4.7K
R23 4.7K
R26 7.5k
R27 1k
R33 4.7k
R34 100
R35 560
R36 680
C1 0.1
C2 0.1
C3 0.1
C4 0.1
C19 0.1
C67 2.2
C68 0.1
C70 0.1
S1 HL21-NS
NOTACK
BMCK10
NRESET
NASB
CKBUS
CONTL
BUSCNT
NWR
NRD
NCSUS
NCSBUS
NRST
NRSTOUT
NIACKIN
NIACKIN4
NIACKIN5
NIACKIN7
NIPL7
NIACKIN2
IPL
NAS
ABUS
DBUS
PARTS LIST 44W86746
QTY ITEM PART No.
DESCRIPTION
MATERIAL
FINISH
CHECKED BY NAKAZAWA
APPROVED BY TODA
DRAWN BY IWASAWA
DESIGNED BY YOSHIDA
SCALE
TITLE A6-A1 CPU
DRAWING No. 43W35221
DEP
19
ANRITSU CORP.
3-261/3-262

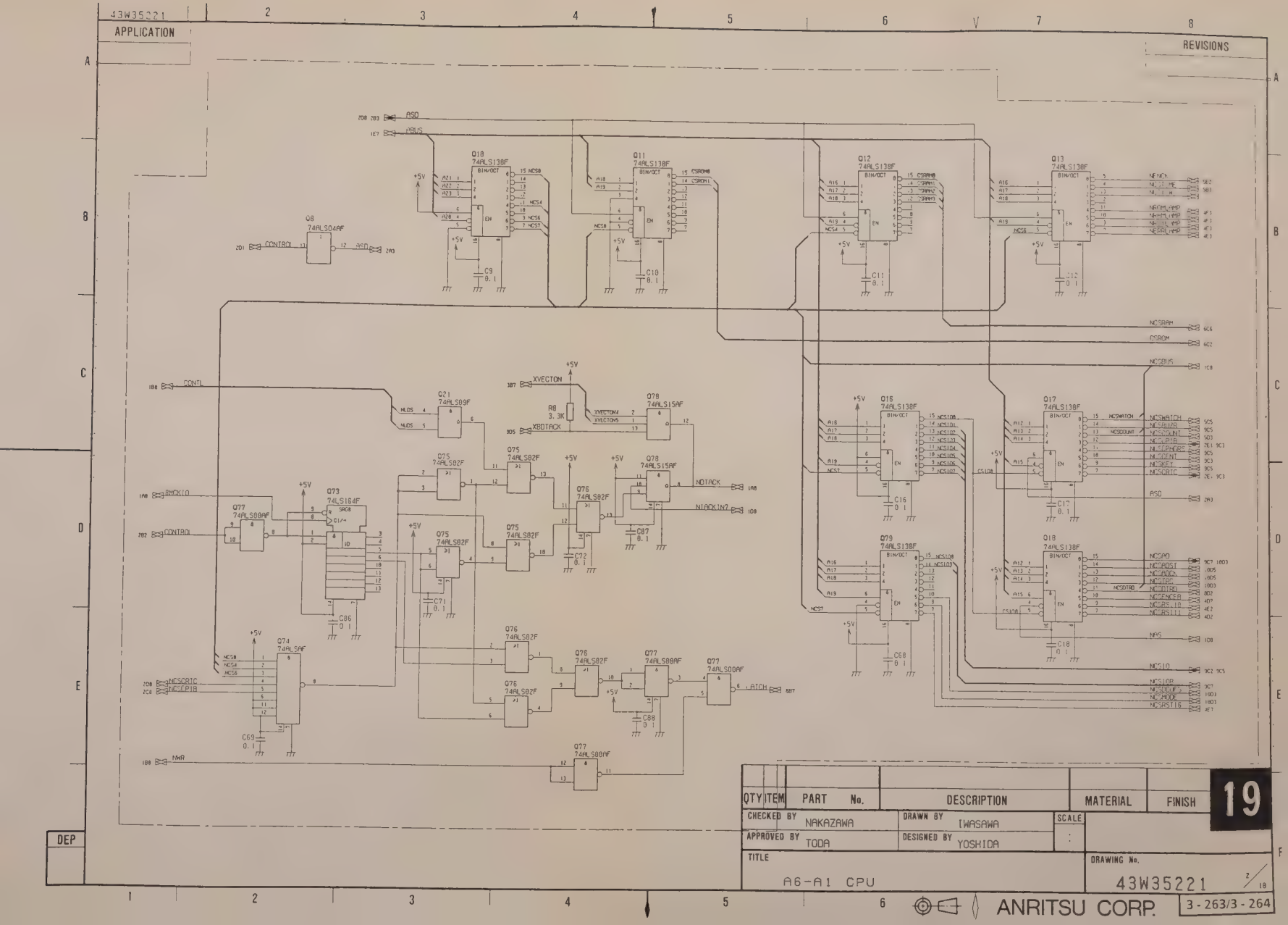
43W35221
APPLICATION
REVISIONS
ASD
ABUS
CONTRO
CONTL
XVECTON
XBOTACK
RMCKIO
NOTACK
NIACKIN7
MWR
ATCH
NCSRAM
CSROM
NCSBUS
NCSWATCH
NCSDUAR
NCSCOUNT
NCSCPIB
NCSCPHDRS
NCSCENT
NCSRST
NCSCRTC
NCSPO
NCSPOST
NCSBOOT
NCSTRP
NCSDTRO
NCSCNECR
NCSRS_IO
NCSRST13
NCSRST16
NCSIO
NCSIOR
NCSDUCP2
NCPMODE
Q10 74ALS138F BIN/OCT
Q11 74ALS138F BIN/OCT
Q12 74ALS138F BIN/OCT
Q13 74ALS138F BIN/OCT
Q16 74ALS138F BIN/OCT
Q17 74ALS138F BIN/OCT
Q18 74ALS138F BIN/OCT
Q79 74ALS138F BIN/OCT
Q8 74ALS04AF
Q21 74ALS09F
Q73 74LS164F SRCB
Q74 74ALS04F
Q75 74ALS02F
Q76 74ALS02F
Q77 74ALS00AF
Q78 74ALS15AF
R8 3.3K
C9 0.1
C10 0.1
C11 0.1
C12 0.1
C16 0.1
C17 0.1
C18 0.1
C68 0.1
C69 0.1
C71 0.1
C72 0.1
C86 0.1
C87 0.1
C88 0.1
+5V
DEP
QTY ITEM PART No. DESCRIPTION MATERIAL FINISH
CHECKED BY NAKAZAWA
DRAWN BY IWASAWA
APPROVED BY TODA
DESIGNED BY YOSHIDA
SCALE :
TITLE A6-A1 CPU
DRAWING No. 43W35221
19
ANRITSU CORP.
3-263/3-264

APPLICATION

REVISIONS

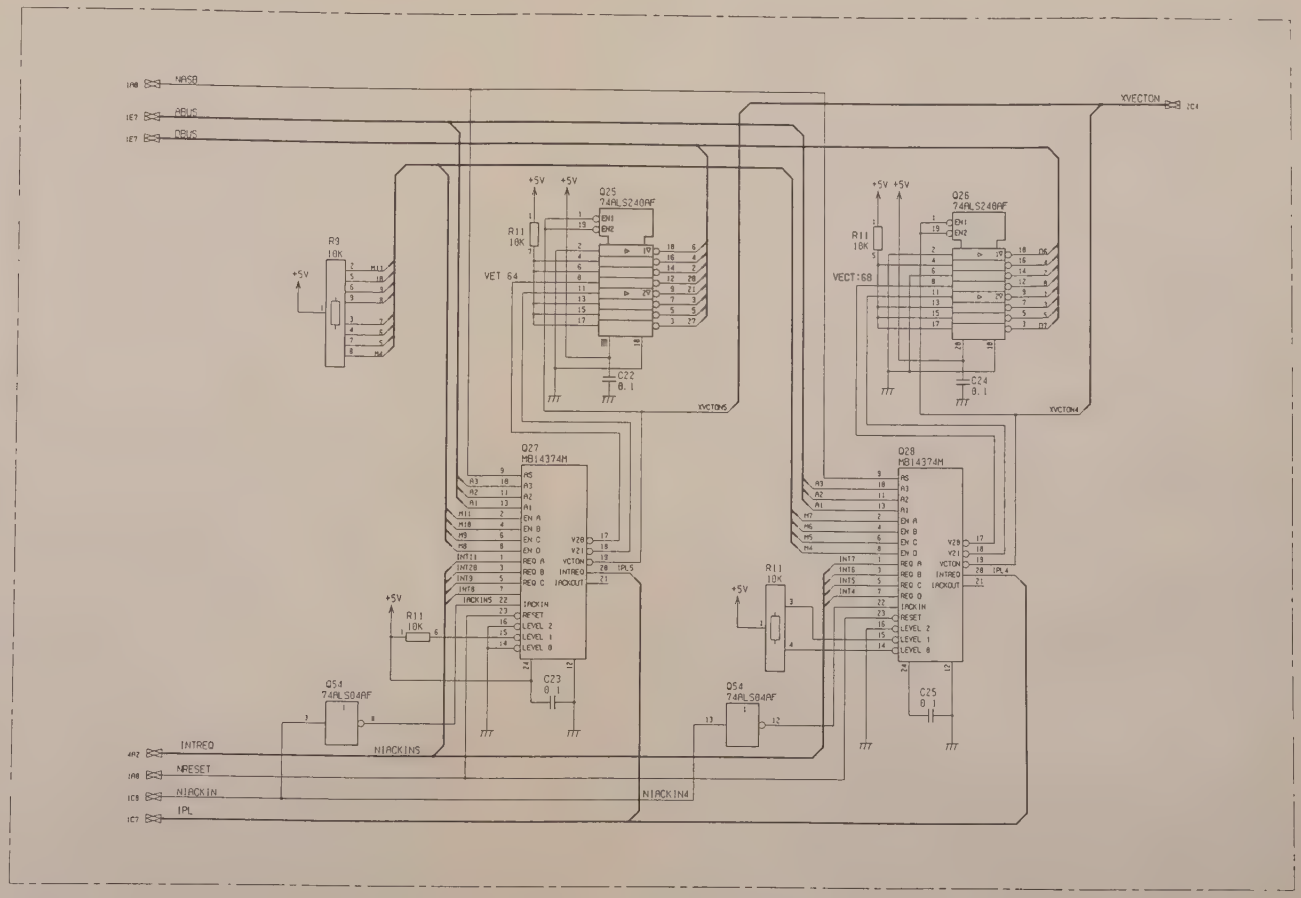

QTY	ITEM	PART No.	DESCRIPTION	MATERIAL	FINISH

CHECKED BY NAKAZAWA	DRAWN BY IWASAWA	SCALE :	
APPROVED BY TODA	DESIGNED BY YOSHIDA		

TITLE: A6-A1 CPU

DRAWING No. 43W35221 3/18

19

DEP

APPLICATION

REVISIONS

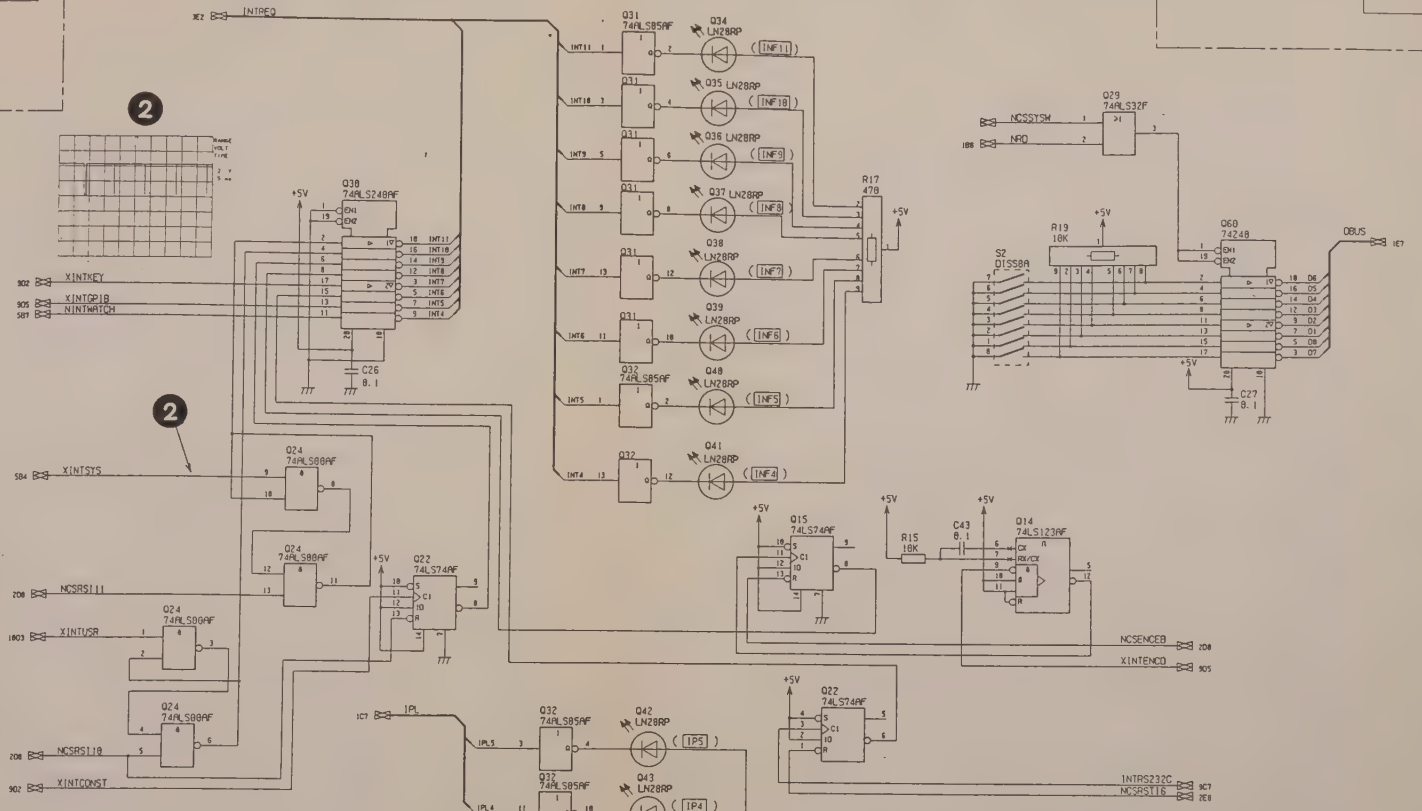

QTY	ITEM	PART No.	DESCRIPTION	MATERIAL	FINISH
CHECKED BY	NAKAZAWA	DRAWN BY	IWASAWA	SCALE	
APPROVED BY	TODA	DESIGNED BY	YOSHIDA	:	

TITLE: A6-A1 CPU

DRAWING No. 43W35221 4/10

DEP

19

ANRITSU CORP.

APPLICATION

REVISIONS

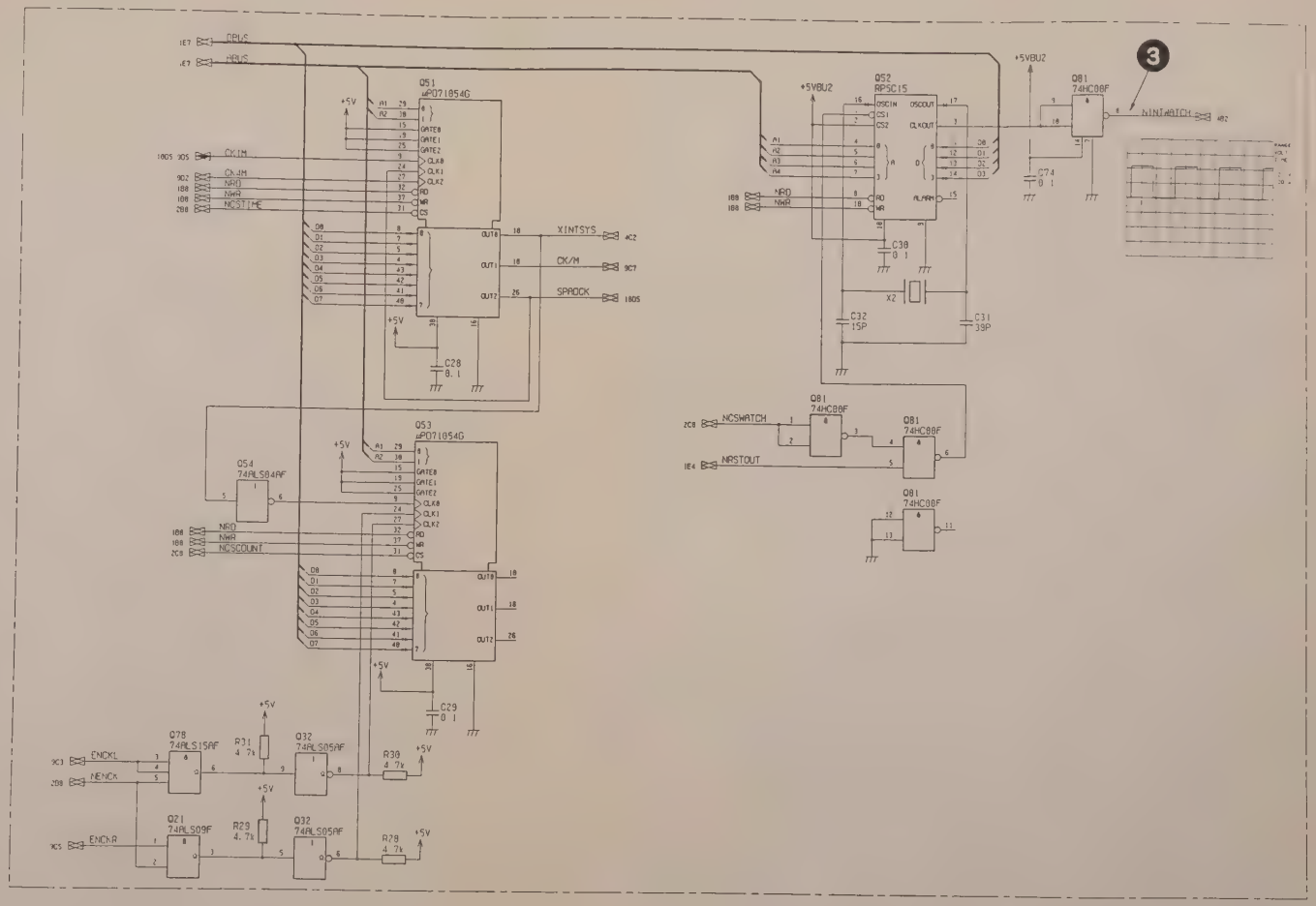

QTY	ITEM	PART No.	DESCRIPTION	MATERIAL	FINISH

19

CHECKED BY NAKAZAWA	DRAWN BY IWASAWA	SCALE :	
APPROVED BY TODA	DESIGNED BY YOSHIDA		

TITLE: A6-A1 CPU

DRAWING No. 43W35221 5/18

DEP

APPLICATION

REVISIONS

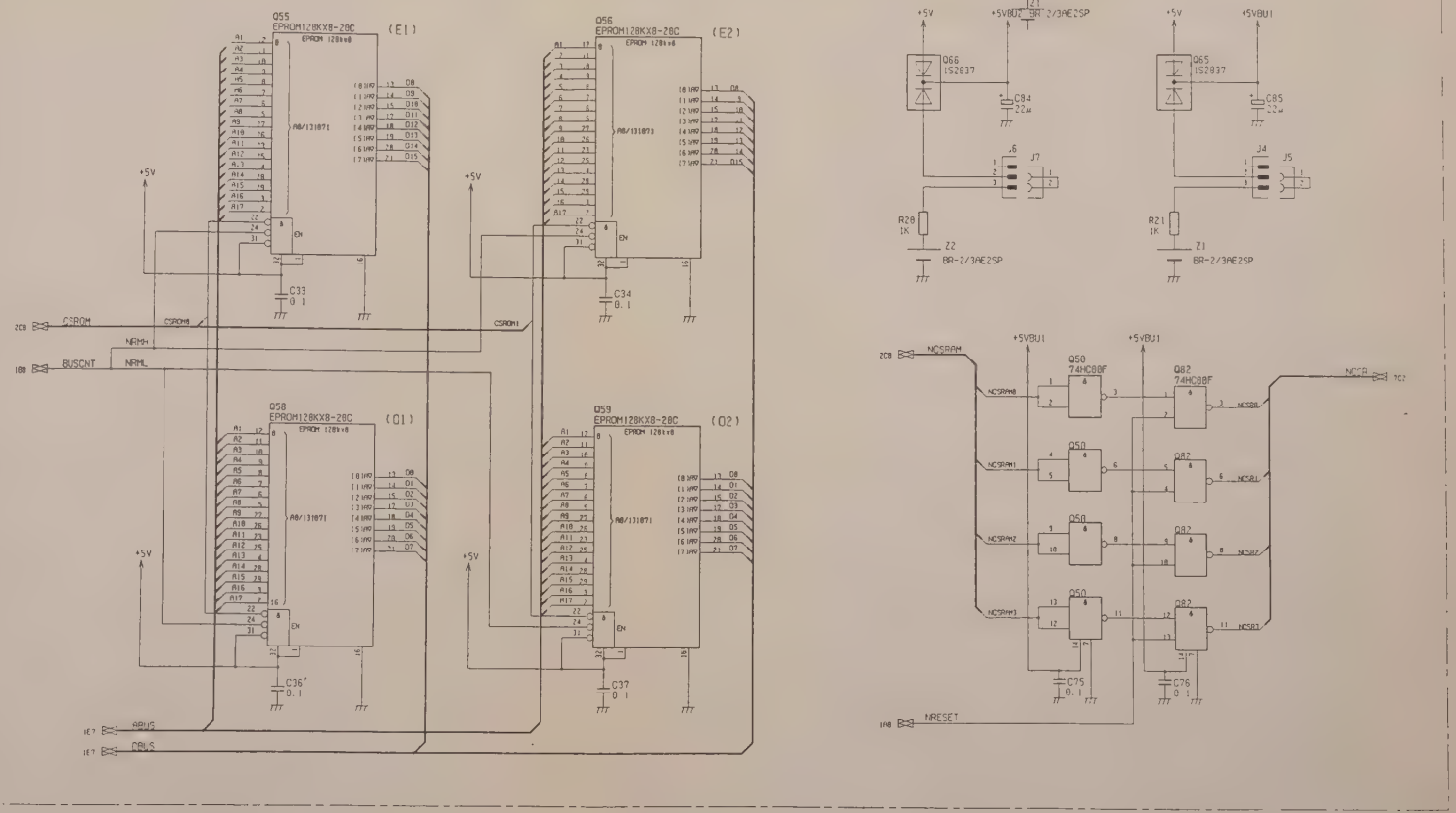

QTY	ITEM	PART No.	DESCRIPTION	MATERIAL	FINISH

CHECKED BY NAKAZAWA	DRAWN BY IWASAWA	SCALE :	19
APPROVED BY TODA	DESIGNED BY YOSHIDA		

TITLE: A6-A1 CPU

DRAWING No. 43W35221 6/18

DEP

ANRITSU CORP.

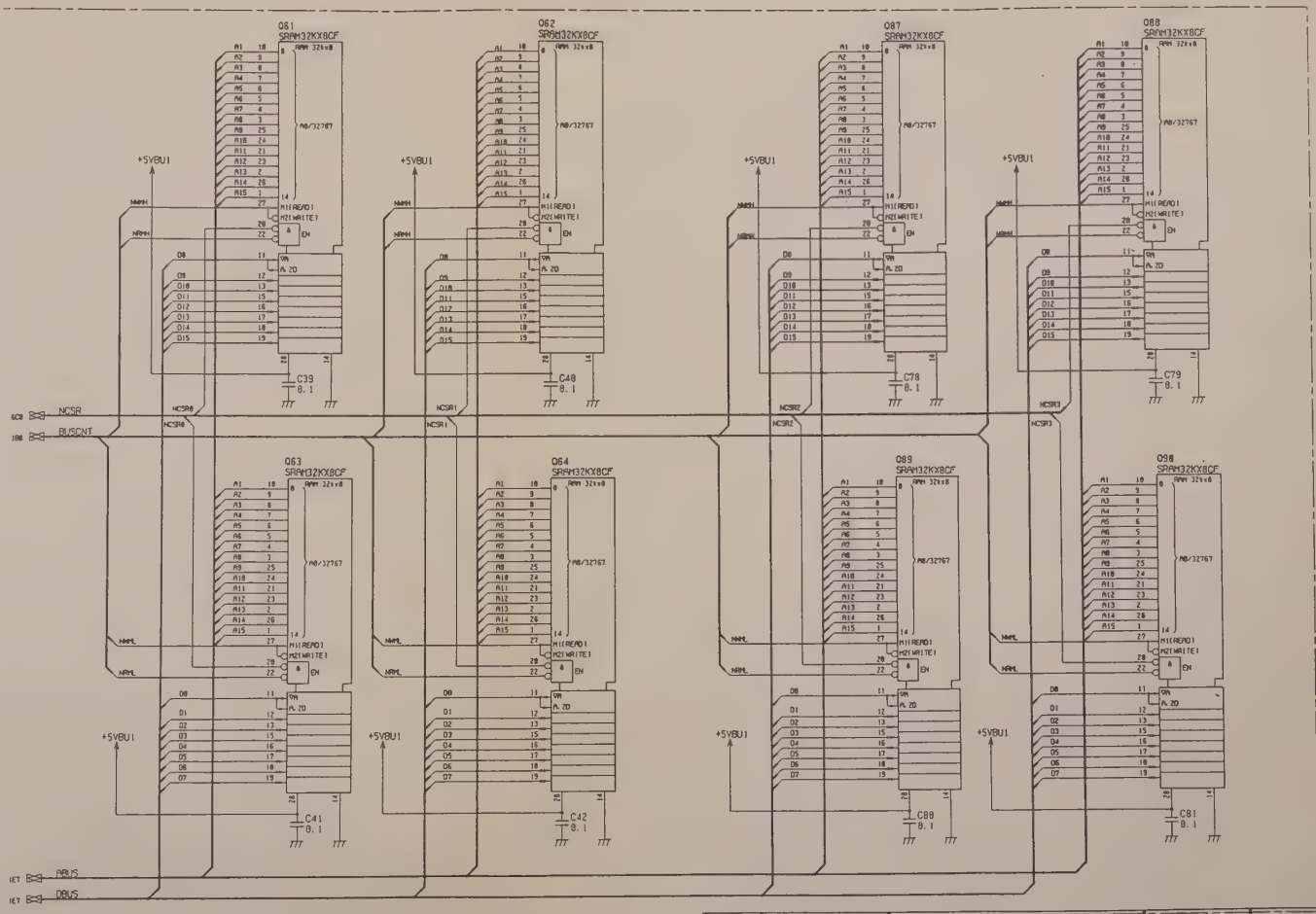

QTY	ITEM	PART No.	DESCRIPTION	MATERIAL	FINISH

19

CHECKED BY NAKAZAWA	DRAWN BY IWASAWA	SCALE :	
APPROVED BY TODA	DESIGNED BY YOSHIDA		

TITLE: A6-A1 CPU

DRAWING No. 43W35221 7/18

DEP

ANRITSU CORP.

APPLICATION

REVISIONS

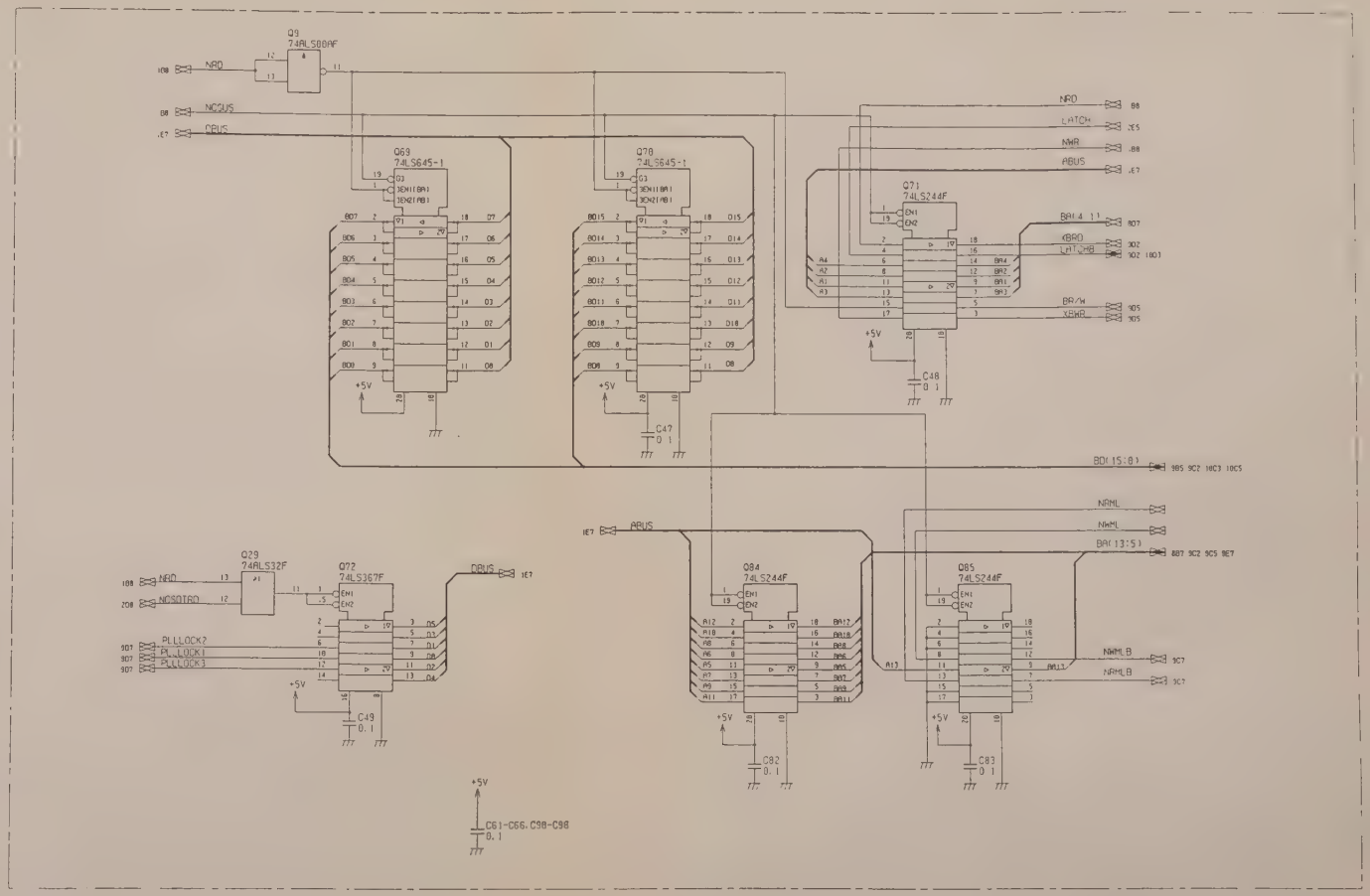

QTY	ITEM	PART No.	DESCRIPTION	MATERIAL	FINISH

19

CHECKED BY NAKAZAWA	DRAWN BY IWASAWA	SCALE	
APPROVED BY TODA	DESIGNED BY YOSHIDA		

TITLE: A6-A1 CPU

DRAWING No. 43W35221 8/18

DEP

ANRITSU CORP.

APPLICATION

REVISIONS

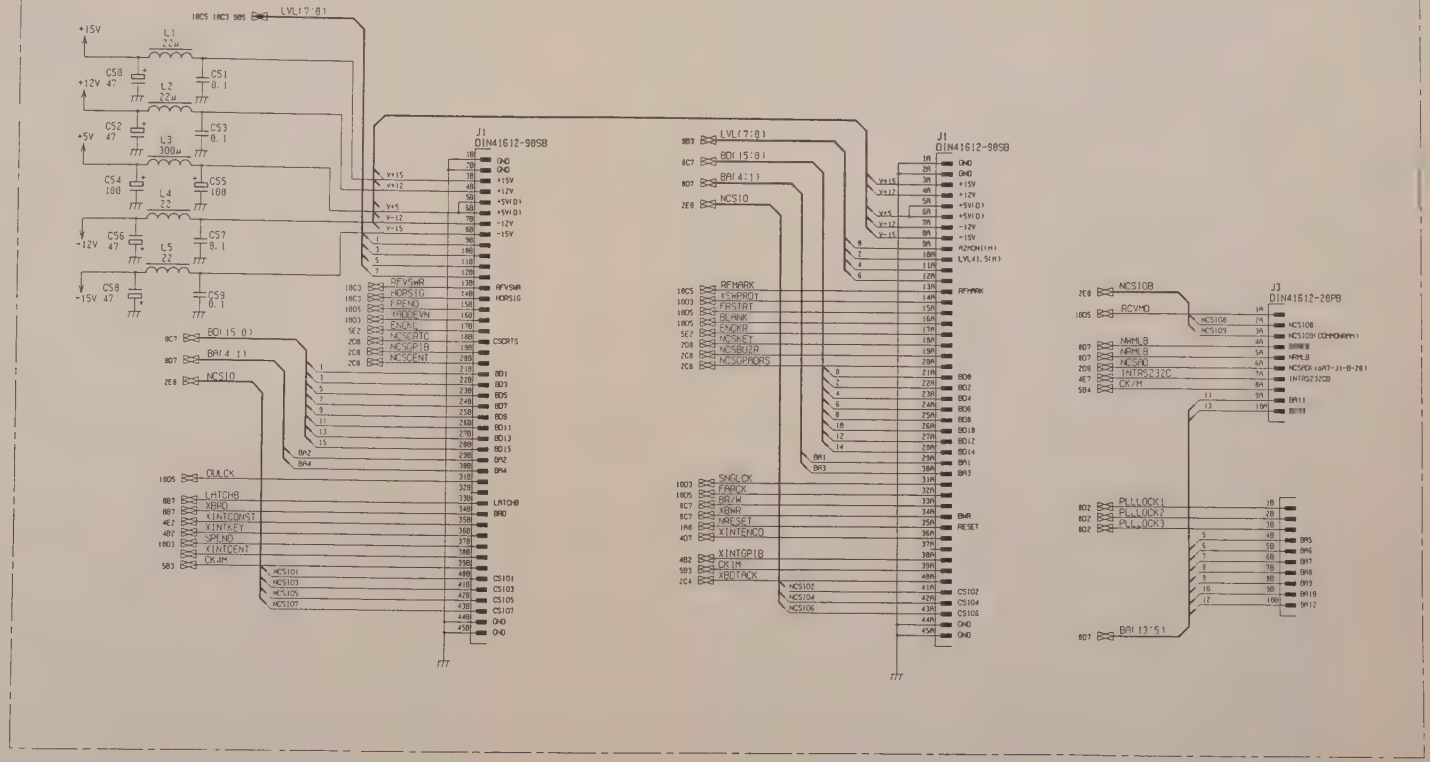

QTY	ITEM	PART No.	DESCRIPTION	MATERIAL	FINISH

CHECKED BY NAKAZAWA	DRAWN BY IWASAWA	SCALE :	
APPROVED BY TODA	DESIGNED BY YOSHIDA		

TITLE: A6-A1 CPU

DRAWING No. 43W35221 9/18

DEP

ANRITSU CORP.

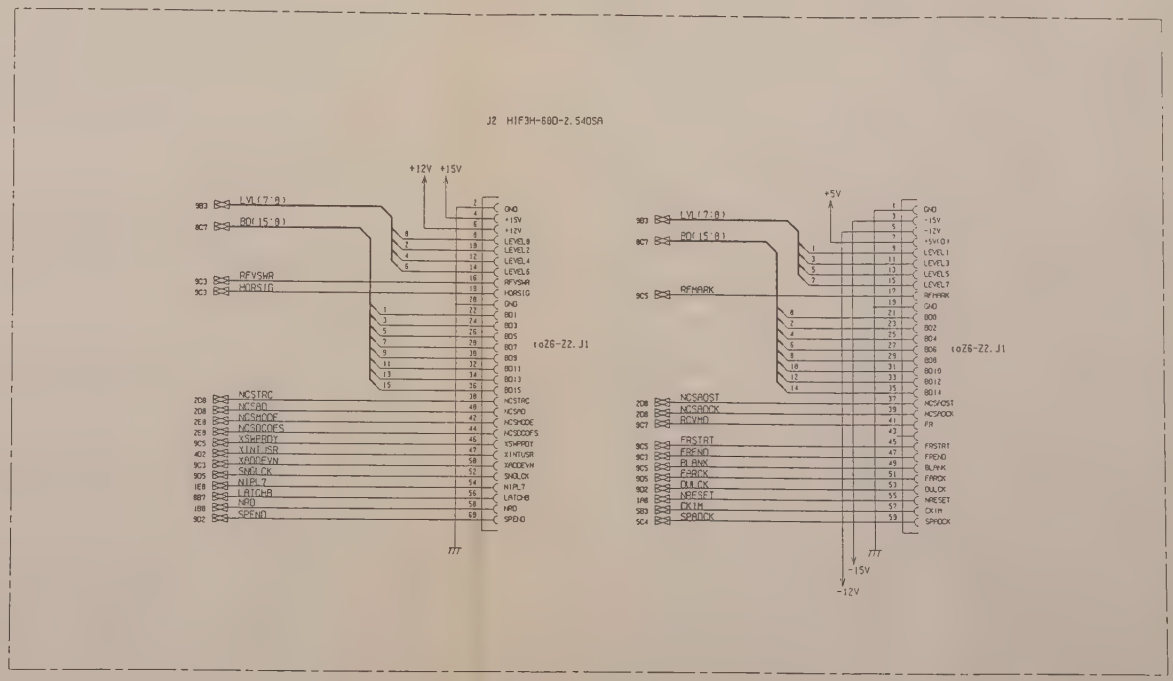

QTY	ITEM	PART No.	DESCRIPTION	MATERIAL	FINISH

CHECKED BY NAKAZAWA	DRAWN BY IWASAWA	SCALE	
APPROVED BY TODA	DESIGNED BY YOSHIOA		
TITLE A6-A1 CPU		DRAWING No. 43W35221	19/18

DEP

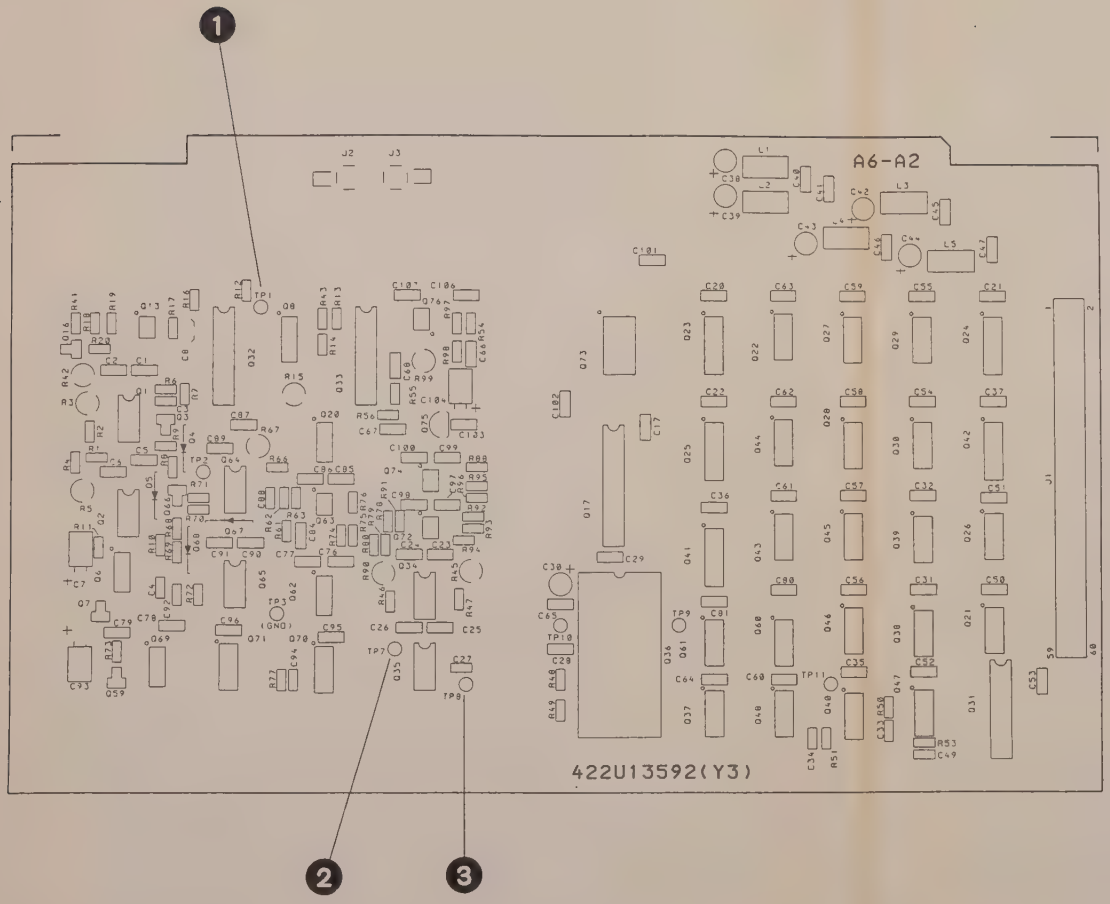

A6-A2 A/D CONVERTER
PC Board Parts Layout **20**

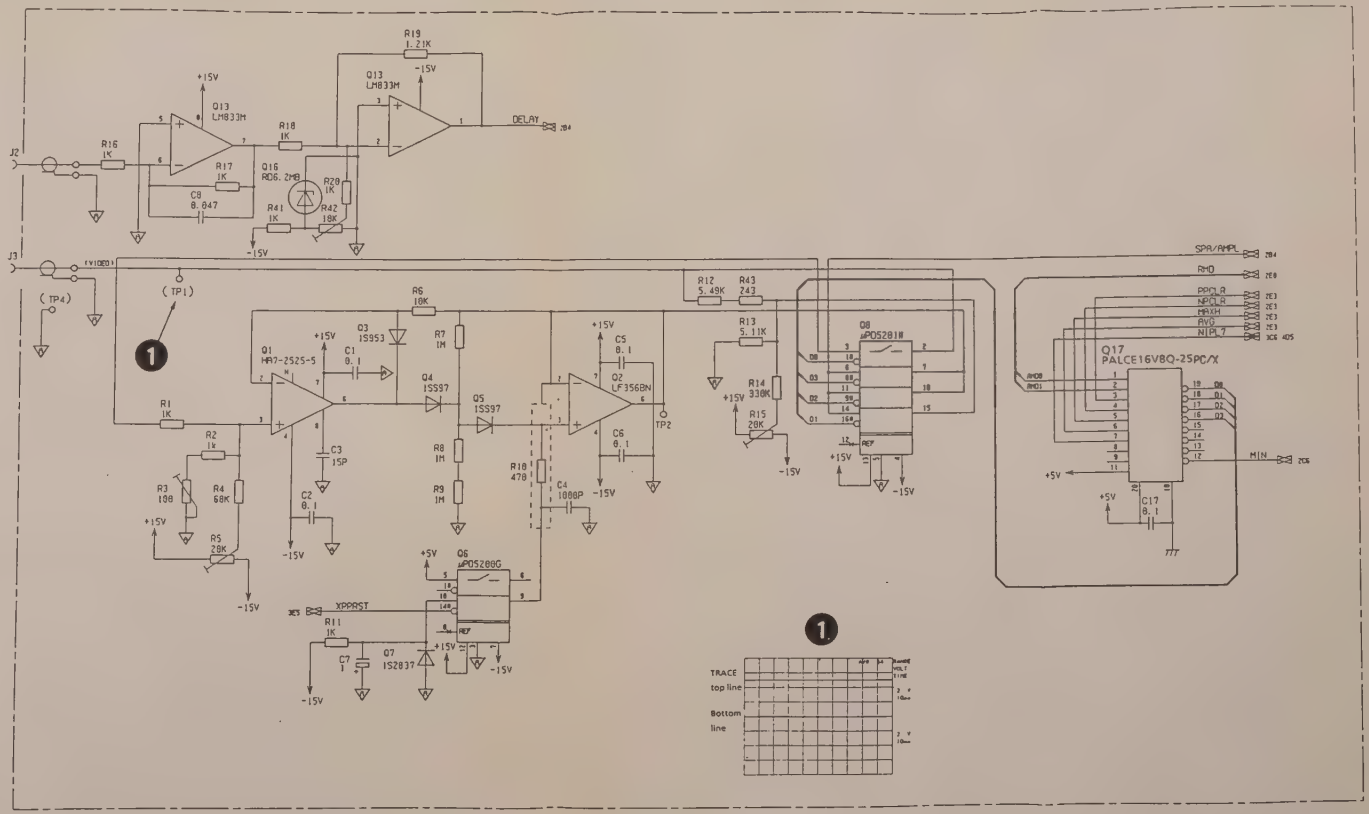

QTY	ITEM	PART No.	DESCRIPTION	MATERIAL	FINISH

CHECKED BY NAKAZAWA	DRAWN BY IWASAWA	SCALE :	
APPROVED BY TODA	DESIGNED BY YOSHIDA		

TITLE: A6-A2 A/D CONVERTER

DRAWING No. 43W40046 1/6

PARTS LIST 44W87200

DEP

20

ANRITSU CORP.

APPLICATION

REVISIONS

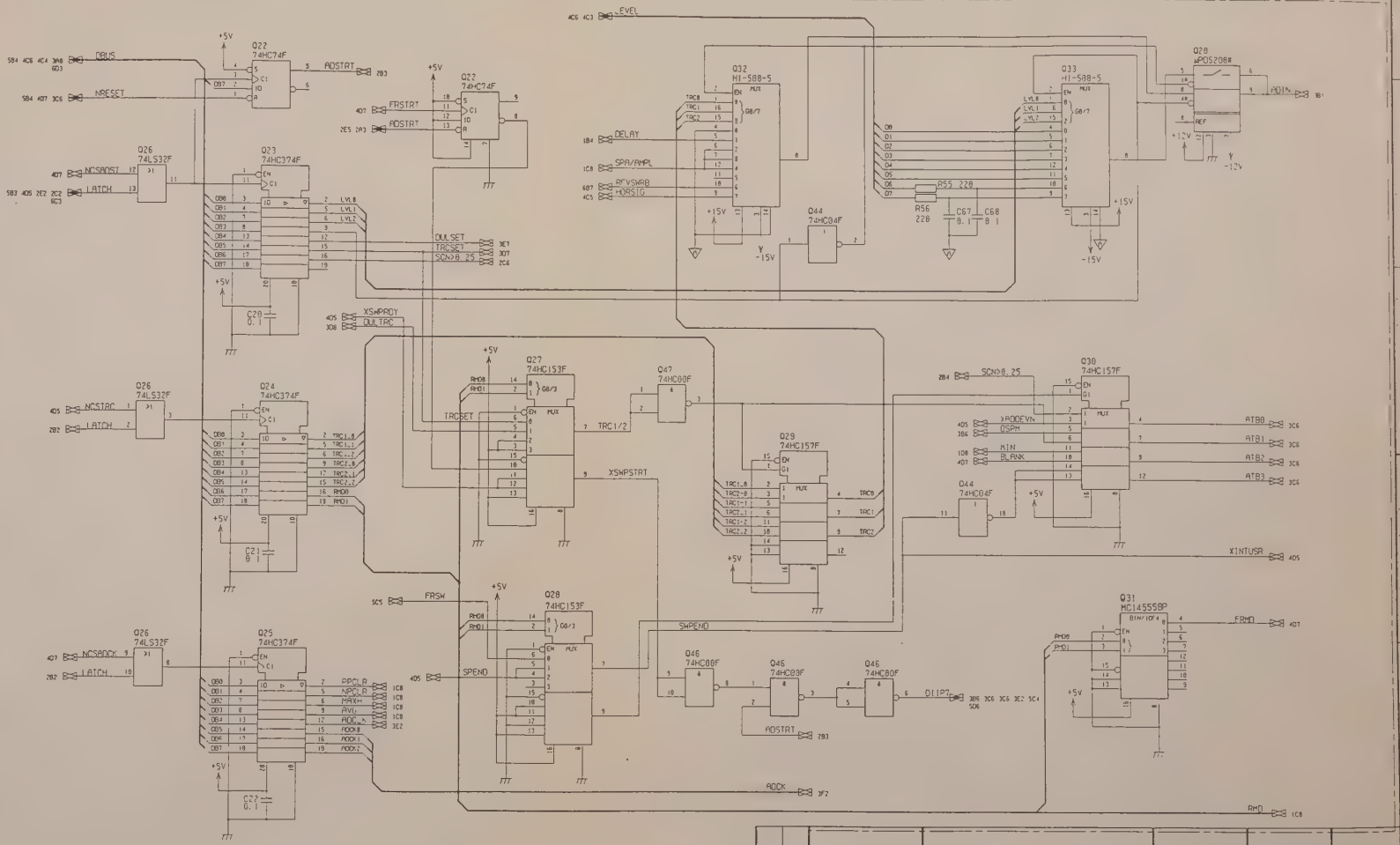

QTY	ITEM	PART No.	DESCRIPTION	MATERIAL	FINISH

CHECKED BY NAKAZAWA	DRAWN BY IWASAWA	SCALE :	20
APPROVED BY TODA	DESIGNED BY YOSHIDA		

TITLE: A6-A2 A/D CONVERTER

DRAWING No. 43W40046 2/6

DEP

ANRITSU CORP.

APPLICATION

REVISIONS

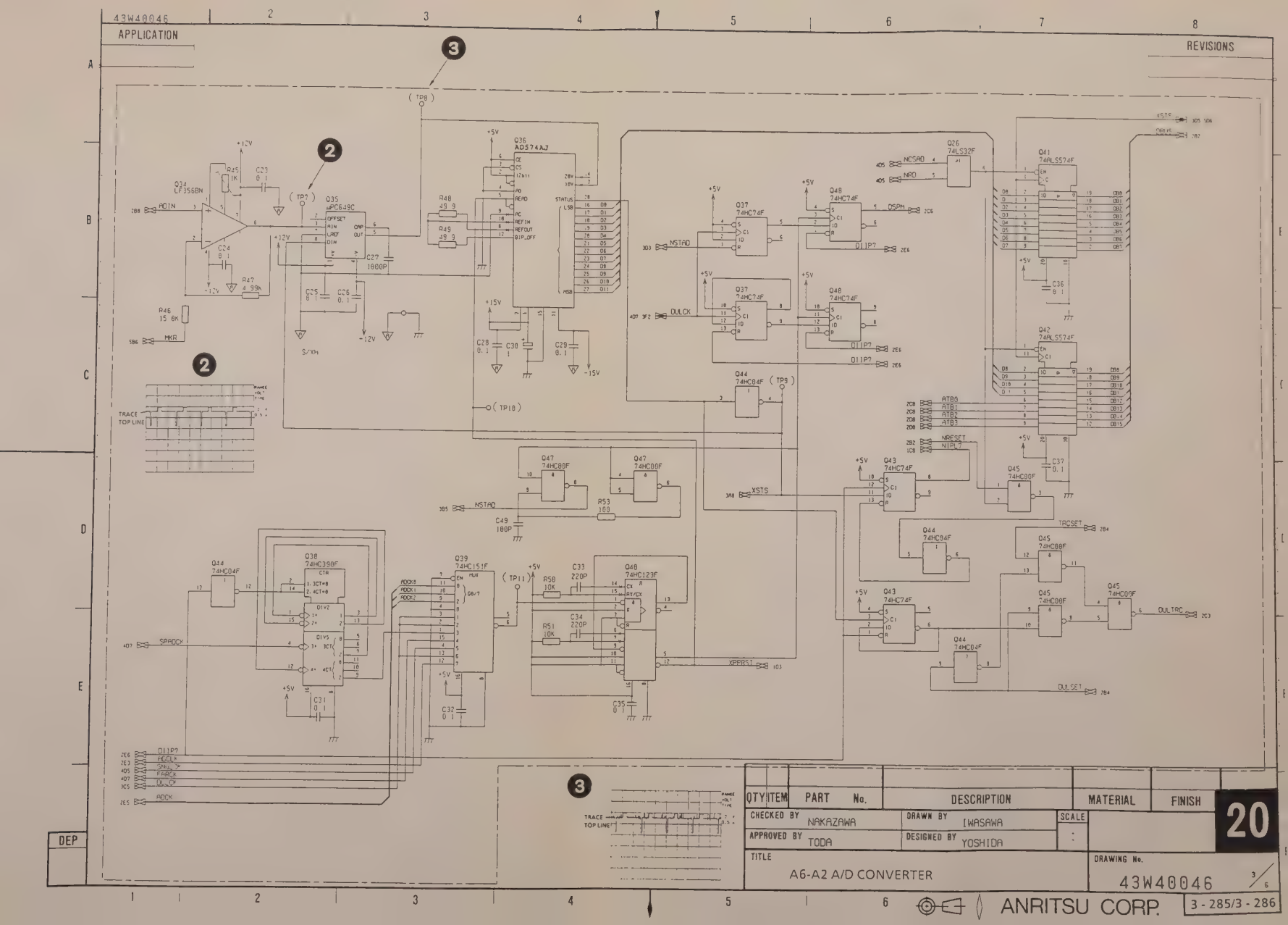

QTY	ITEM	PART No.	DESCRIPTION	MATERIAL	FINISH

CHECKED BY NAKAZAWA	DRAWN BY IWASAWA	SCALE :	20
APPROVED BY TODA	DESIGNED BY YOSHIDA		

TITLE: A6-A2 A/D CONVERTER

DRAWING No. 43W40046 3/6

DEP

APPLICATION

REVISIONS

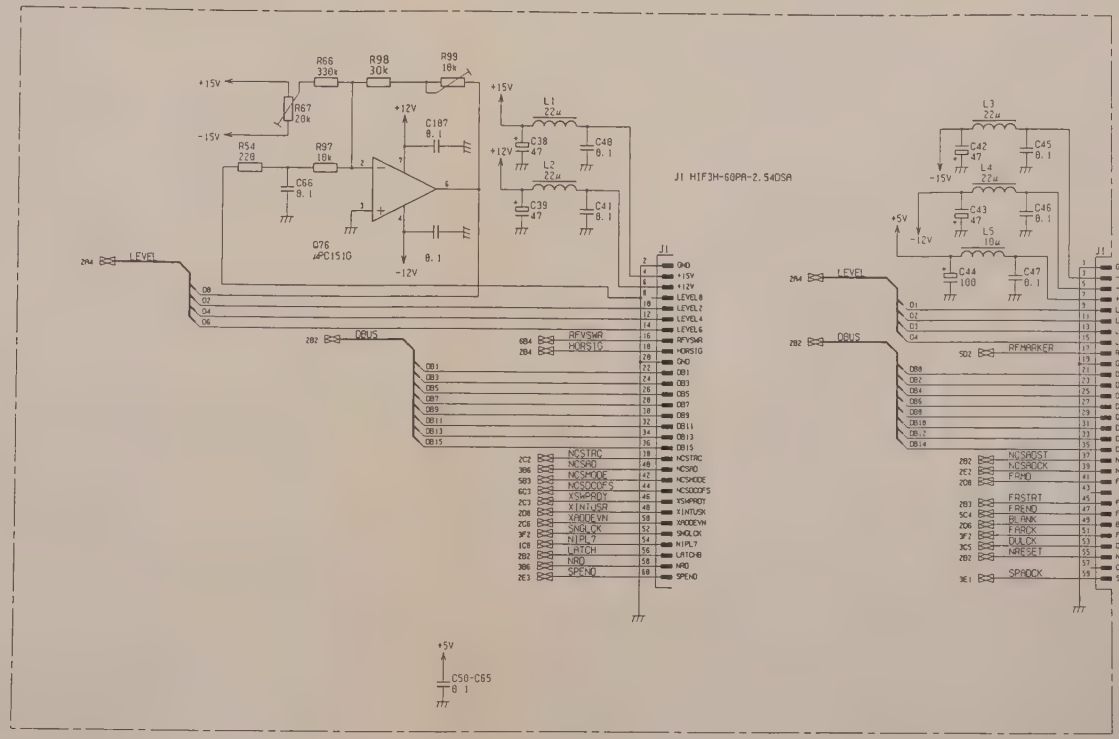

QTY	ITEM	PART No.	DESCRIPTION	MATERIAL	FINISH

CHECKED BY NAKAZAWA	DRAWN BY IWASAWA	SCALE :	
APPROVED BY TODA	DESIGNED BY YOSHIDA		

TITLE: A6-A2 A/D CONVERTER

DRAWING, No. 43W40046 4/6

DEP

ANRITSU CORP.

APPLICATION

REVISIONS

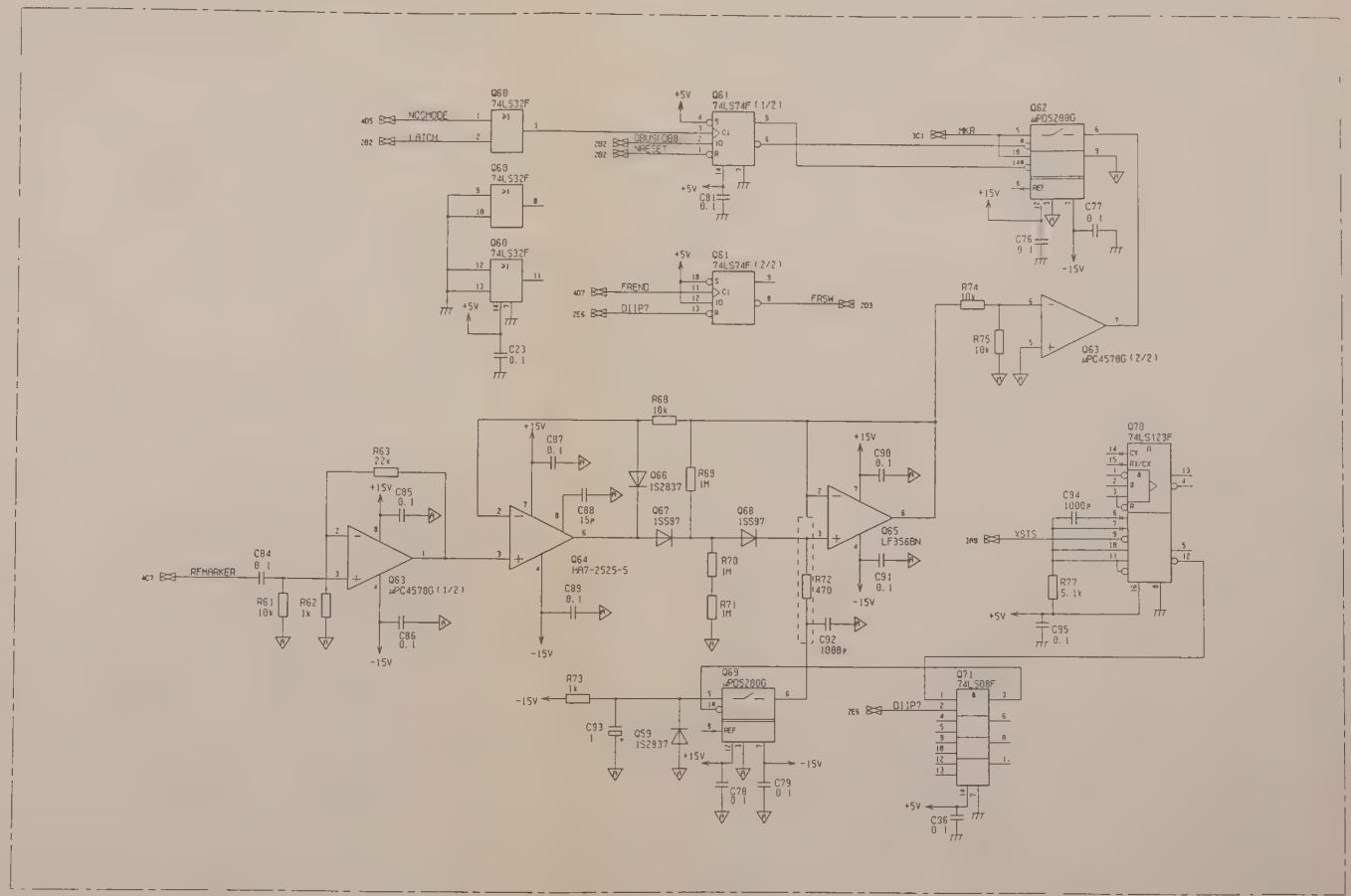

QTY	ITEM	PART No.	DESCRIPTION	MATERIAL	FINISH

CHECKED BY NAKAZAWA	DRAWN BY IWASAWA	SCALE :	20
APPROVED BY TODA	DESIGNED BY YOSHIDA		

TITLE: A6-A2 A/D CONVERTER

DRAWING No. 43W40046 5/6

DEP

ANRITSU CORP.

APPLICATION

REVISIONS

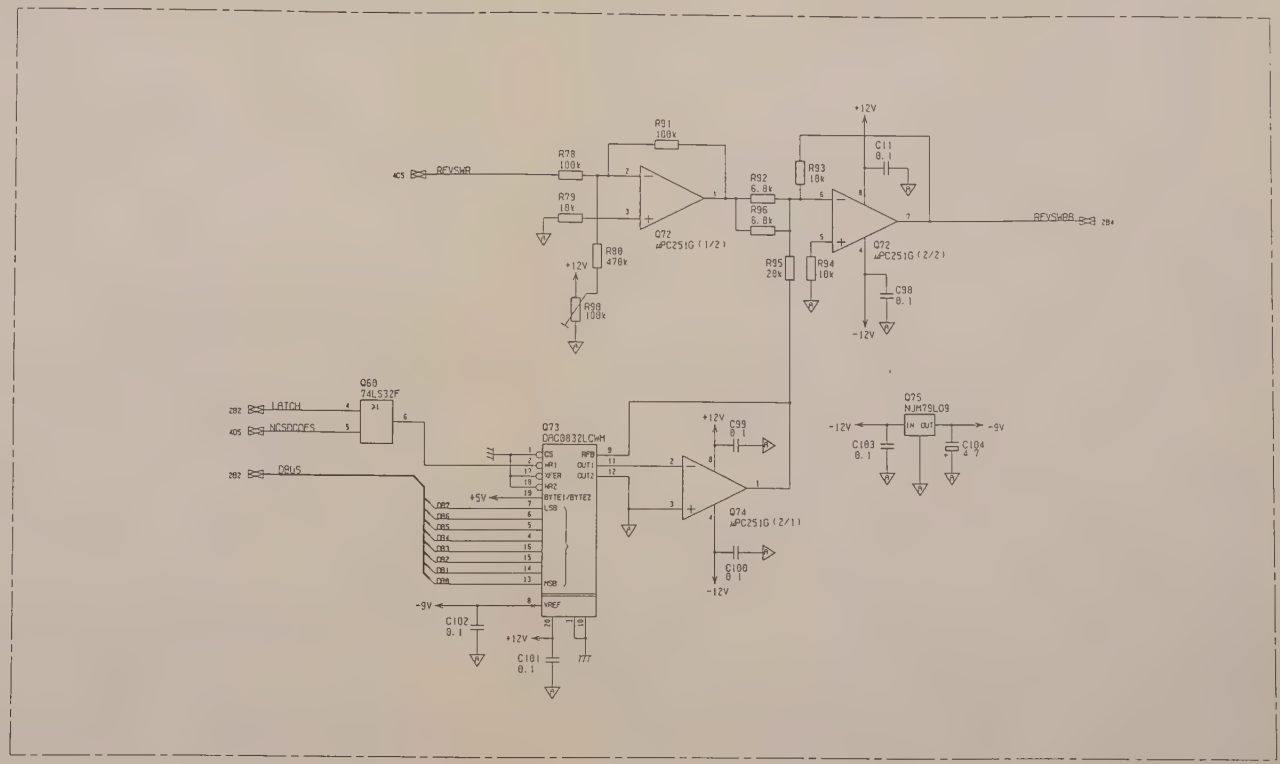

QTY	ITEM	PART No.	DESCRIPTION	MATERIAL	FINISH

CHECKED BY NAKAZAWA	DRAWN BY IWASAWA	SCALE :	
APPROVED BY TODA	DESIGNED BY YOSHIDA		

TITLE: A6-A2 A/D CONVERTER

DRAWING No. 43W40046 6/6

DEP

20

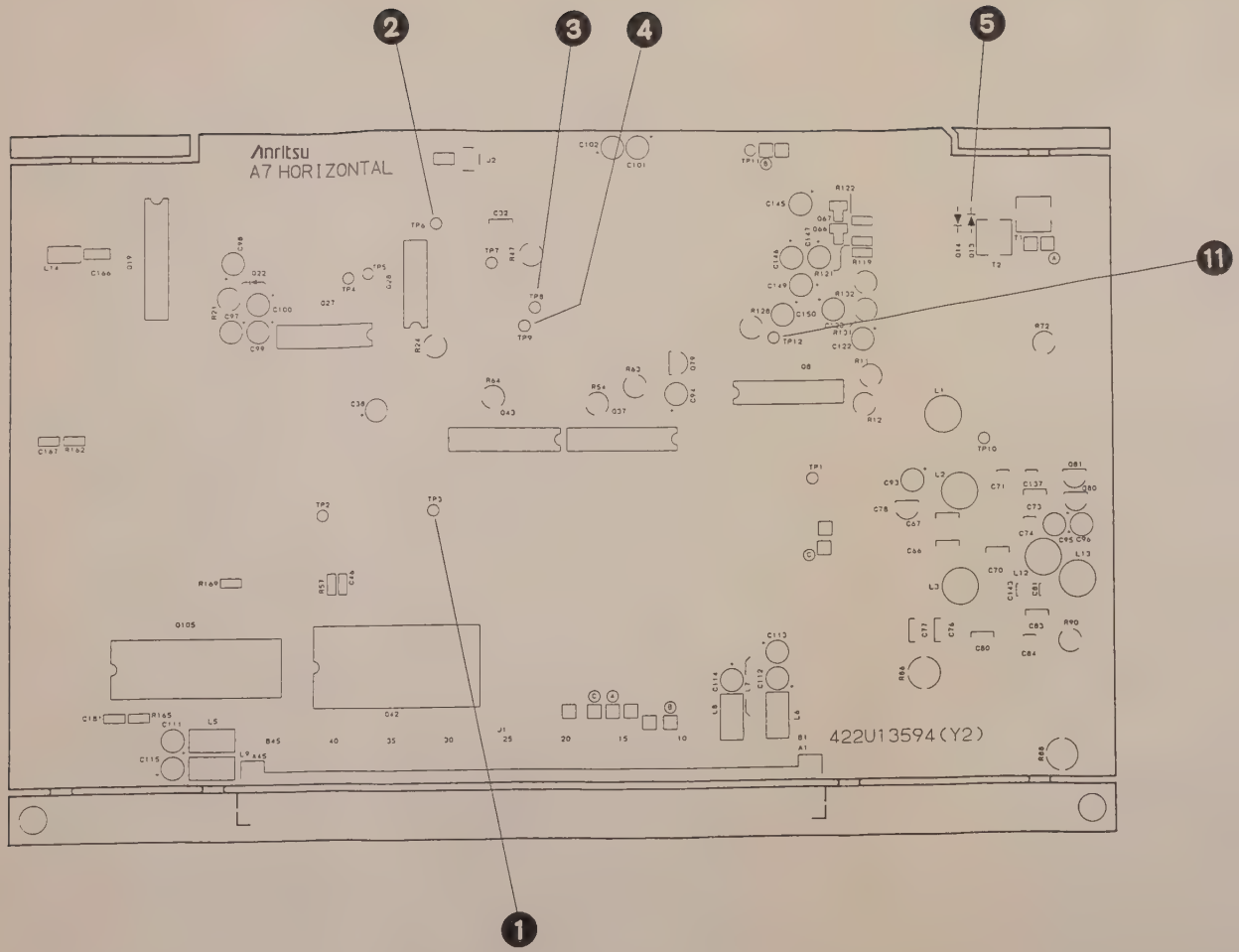

A7 HORIZONTAL PC Board
Parts Layout **21** (1)

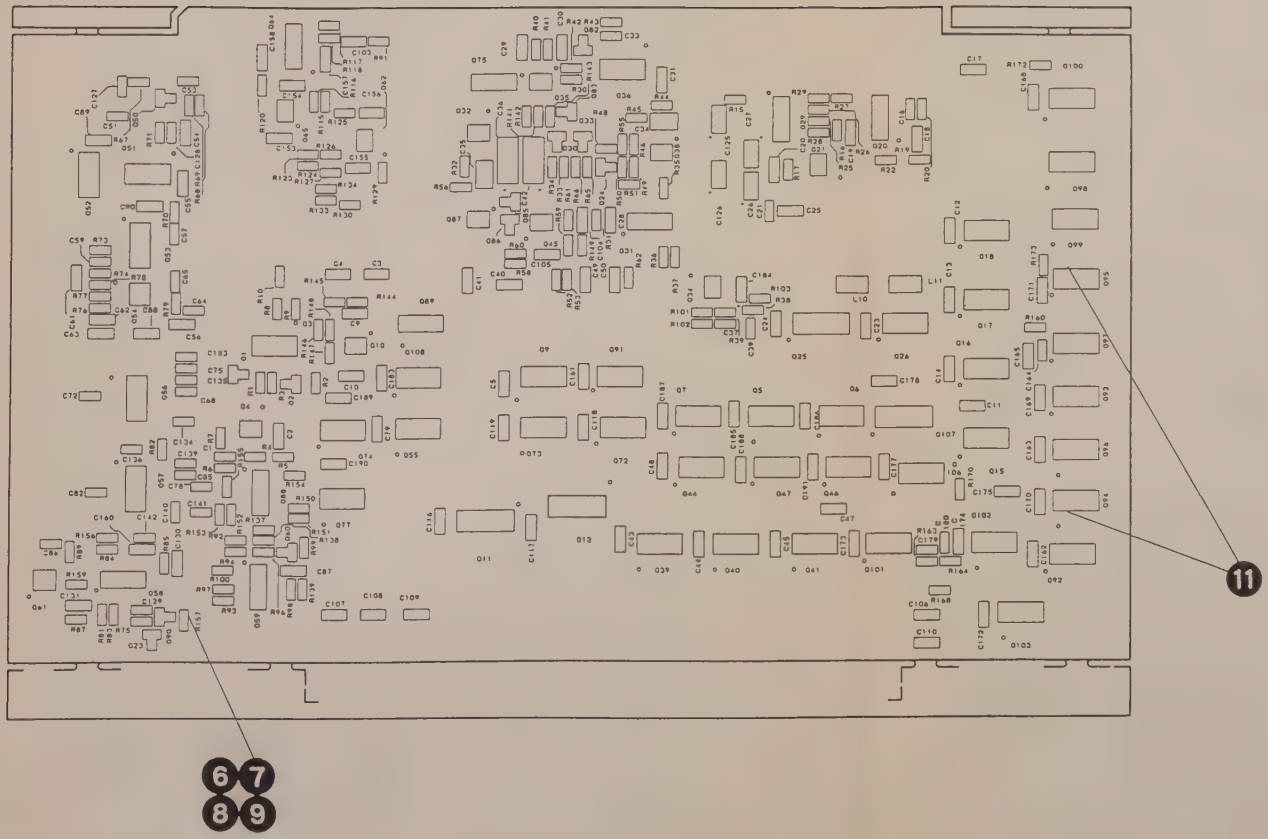

A7 HORIZONTAL PC Board
Parts Layout **21** (2)

APPLICATION

REVISIONS

(SWEEP TRIGGER)

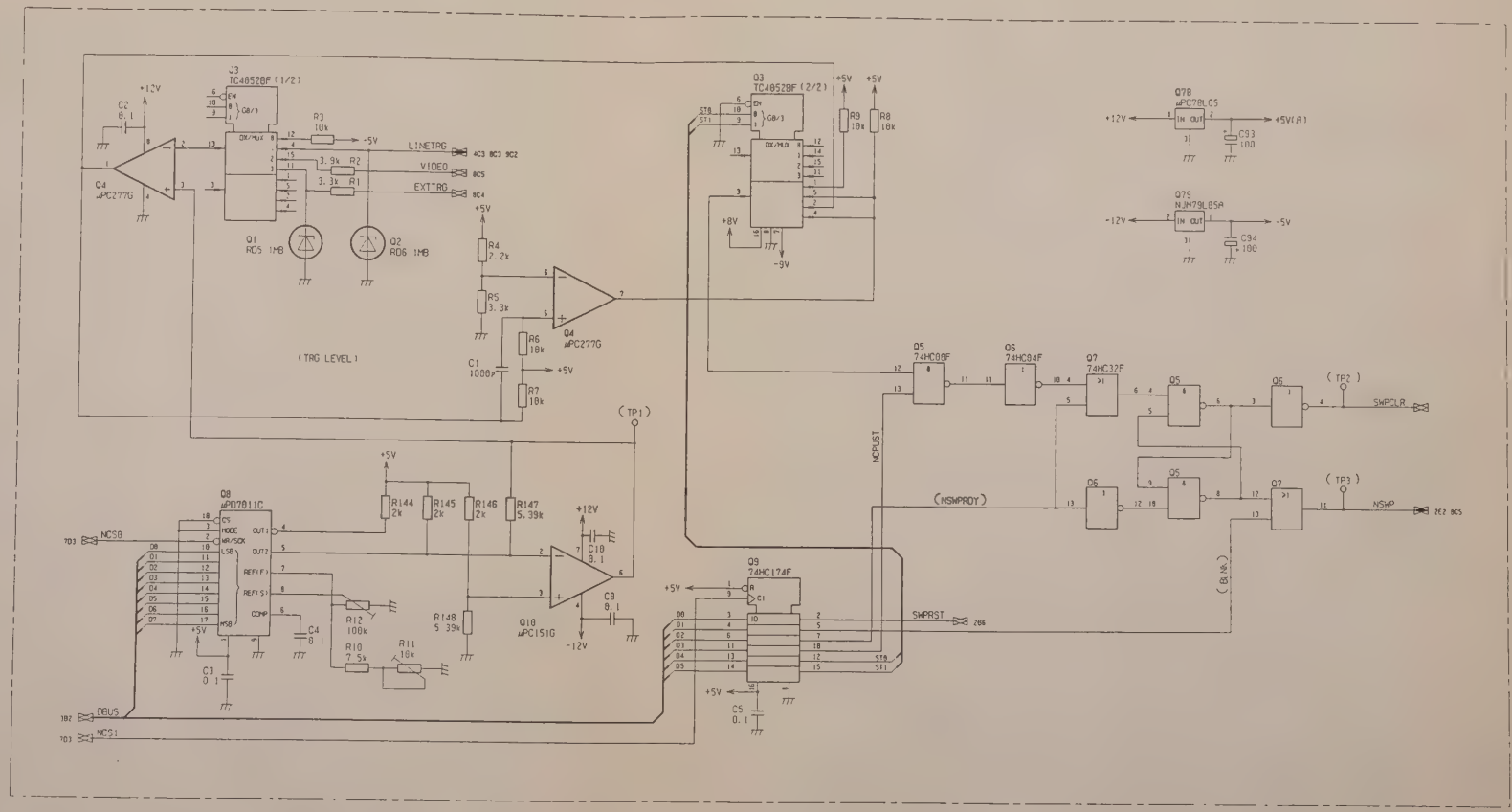

QTY	ITEM	PART No.	DESCRIPTION	MATERIAL	FINISH

21

CHECKED BY NAKAZAWA	DRAWN BY IWASAWA	SCALE :	
APPROVED BY TODA	DESIGNED BY YOSHIDA		

TITLE: A7 HORIZONTAL

DRAWING No. 43W35222 1/18

PARTS LIST 44W86747

DEP

APPLICATION

REVISIONS

(AFC WINDOW COMPARATOR)

(BINARY COUNTER)

(D/A)

(NEAR END A/D CLK)

QTY	ITEM	PART No.	DESCRIPTION	MATERIAL	FINISH

CHECKED BY NAKAZAWA	DRAWN BY IWASAWA	SCALE :	21
APPROVED BY TODA	DESIGNED BY YOSHIDA		

TITLE: A7 HORIZONTAL

DRAWING No. 43W35222 2/18

DEP

ANRITSU CORP.

APPLICATION

REVISIONS

(SPAN WIDTH)

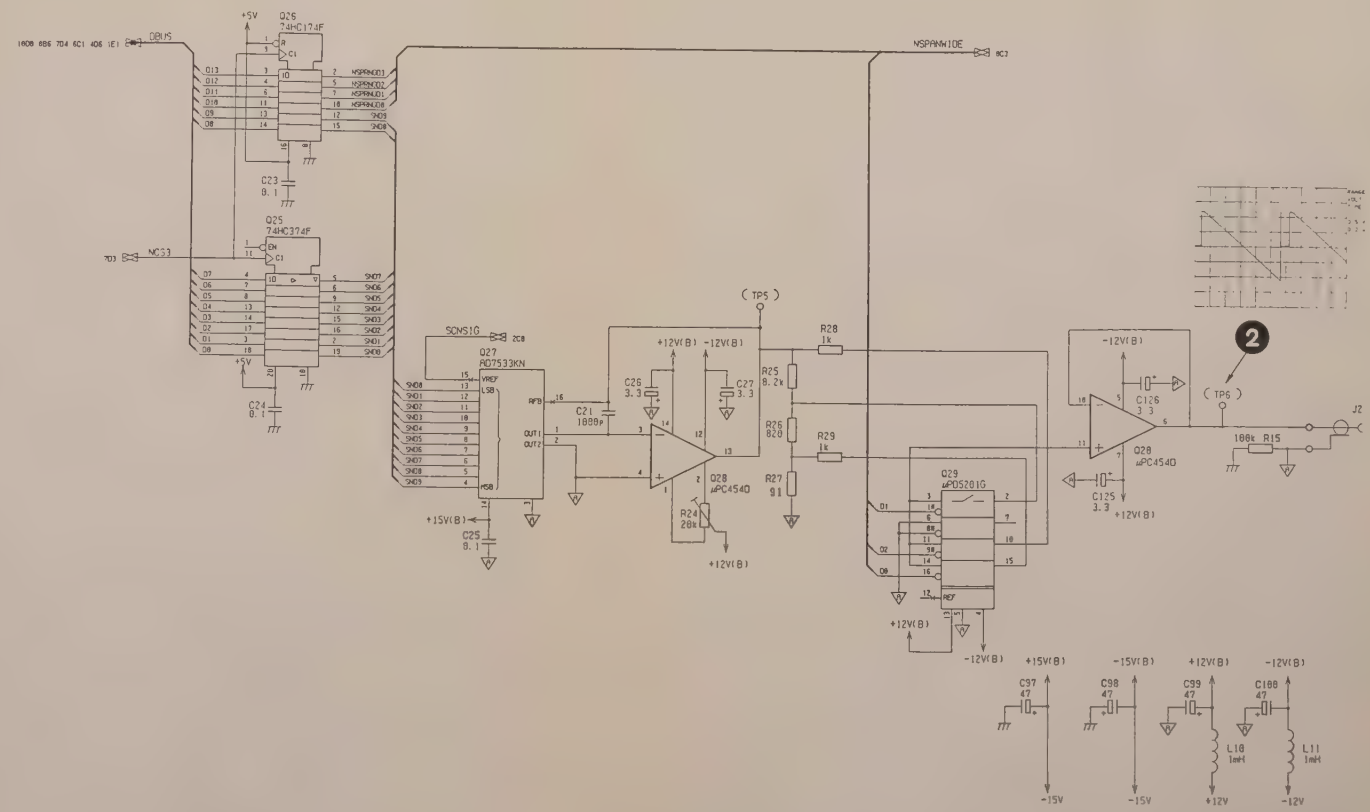

QTY	ITEM	PART No.	DESCRIPTION	MATERIAL	FINISH

CHECKED BY NAKAZAWA	DRAWN BY IWASAWA	SCALE :	
APPROVED BY TODA	DESIGNED BY YOSHIDA		
TITLE A7 HORIZONTAL		DRAWING No. 43W35222	3/10

21

DEP

APPLICATION

REVISIONS

(SWEEP CLK GENERATOR)

(PHASE ADJ)

QTY	ITEM	PART No.	DESCRIPTION	MATERIAL	FINISH

CHECKED BY	NAKAZAWA	DRAWN BY	IWASAWA
APPROVED BY	TODA	DESIGNED BY	YOSHIDA

SCALE :

TITLE: A7 HORIZONTAL

DRAWING No. 43W35222 4/18

DEP

21

ANRITSU CORP.

APPLICATION

REVISIONS

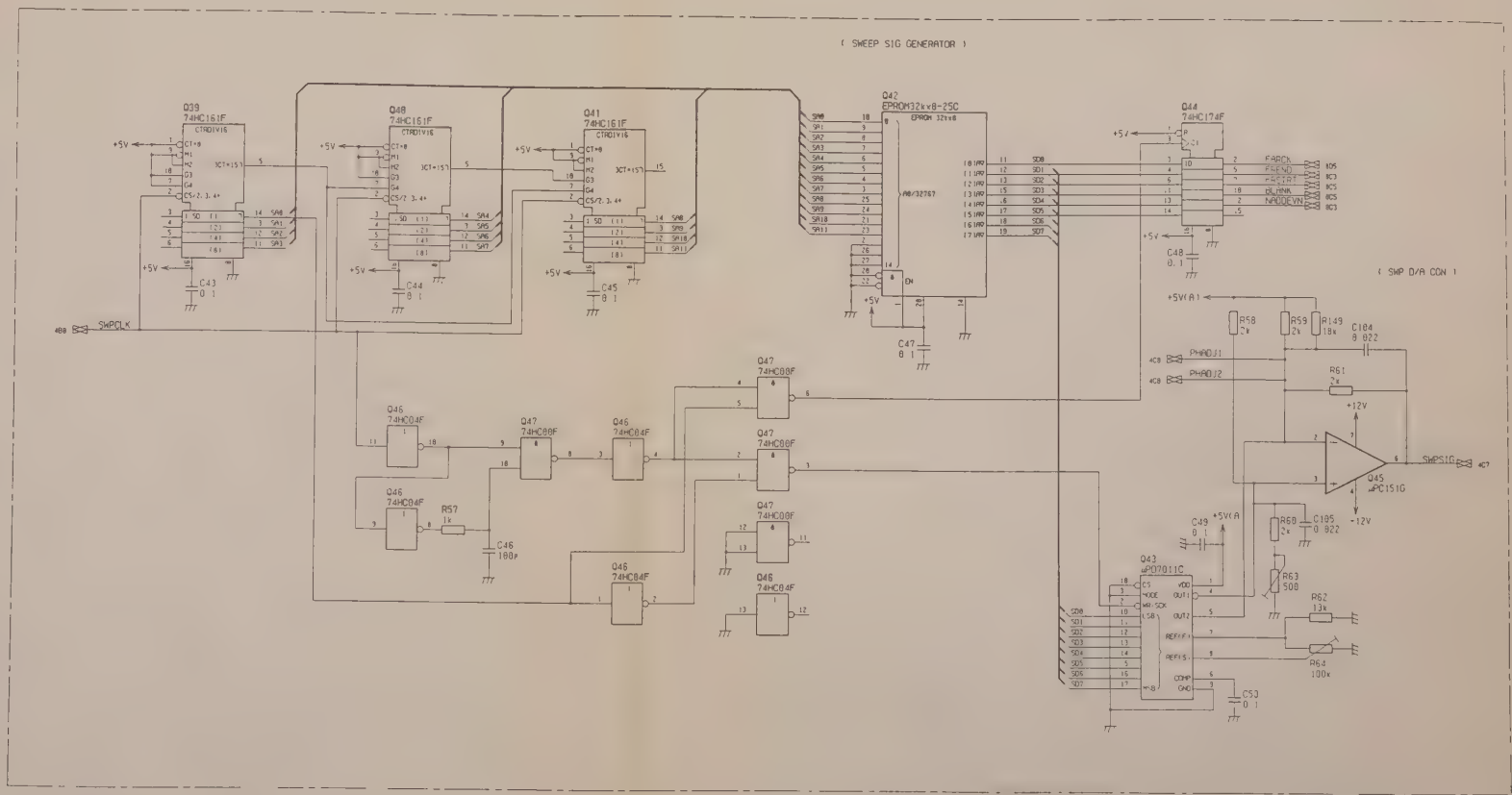

QTY	ITEM	PART No.	DESCRIPTION	MATERIAL	FINISH

CHECKED BY NAKAZAWA	DRAWN BY IWASAWA	SCALE :	
APPROVED BY TODA	DESIGNED BY YOSHIDA		

TITLE: A7 HORIZONTAL

DRAWING No. 43W35222 5/18

21

DEP

43W35222

APPLICATION

REVISIONS

(AFC FOR FAR END MEAS)

(PCO)

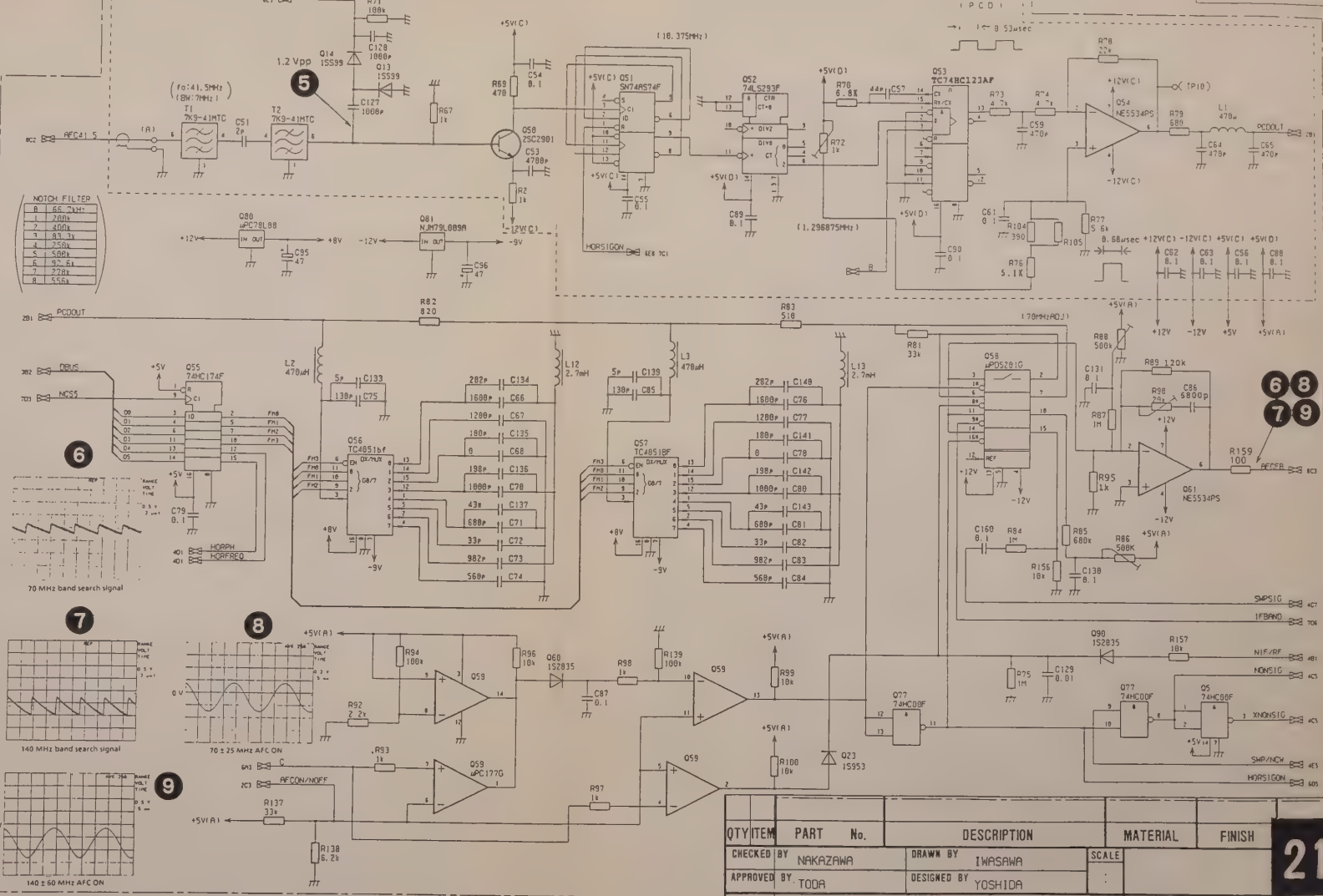

QTY	ITEM	PART No.	DESCRIPTION	MATERIAL	FINISH

CHECKED BY NAKAZAWA	DRAWN BY IWASAWA	SCALE :	21
APPROVED BY TODA	DESIGNED BY YOSHIDA		

TITLE: A7 HORIZONTAL

DRAWING No. 43W35222 6/18

DEP

ANRITSU CORP.

3-305/3-306

APPLICATION

REVISIONS

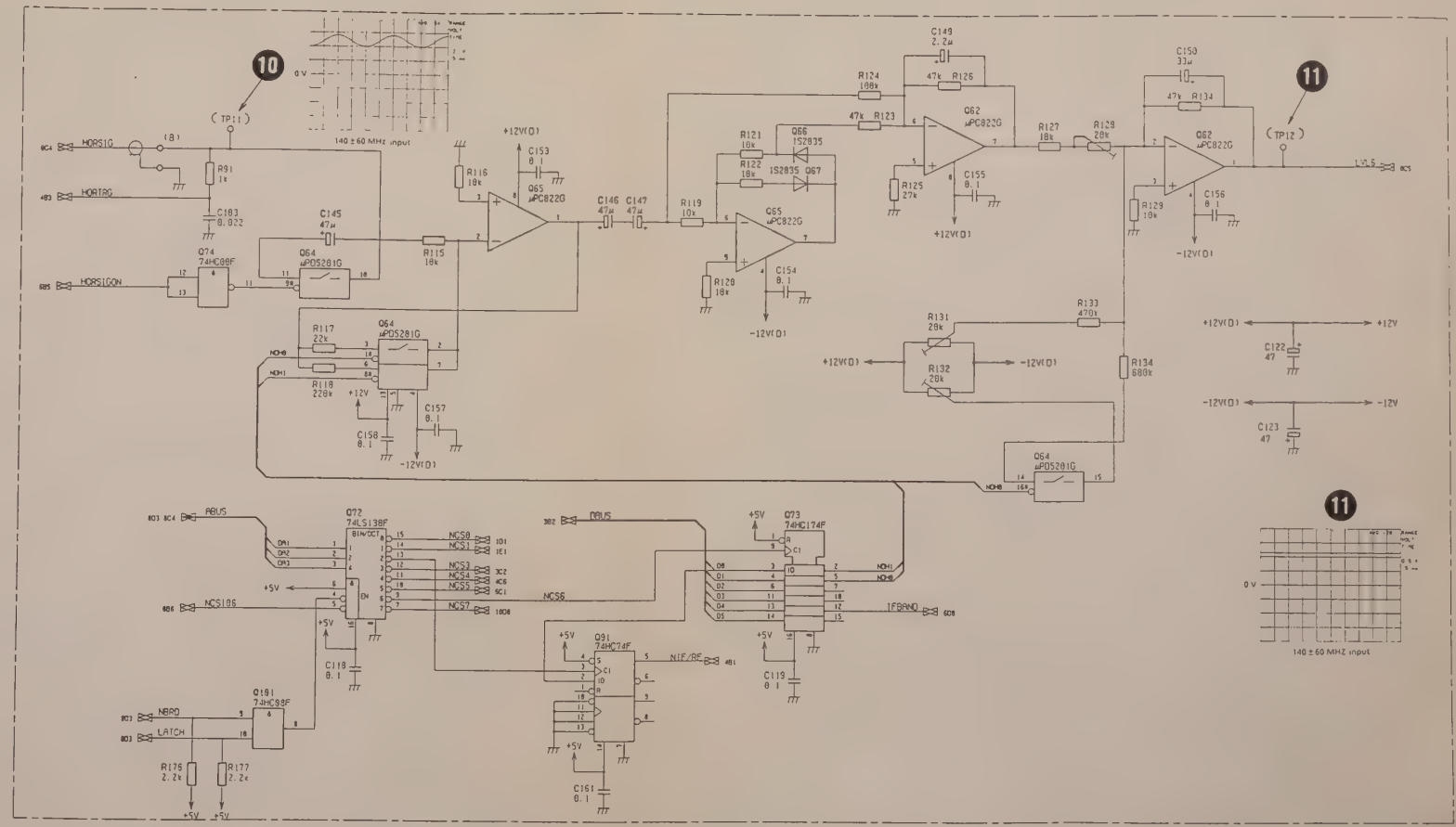

QTY	ITEM	PART No.	DESCRIPTION	MATERIAL	FINISH

CHECKED BY NAKAZAWA	DRAWN BY IWASAWA	SCALE :
APPROVED BY TODA	DESIGNED BY YOSHIDA	

TITLE: A7 HORIZONTAL

DRAWING No. 43W35222 7/18

21

DEP

ANRITSU CORP.

APPLICATION

REVISIONS

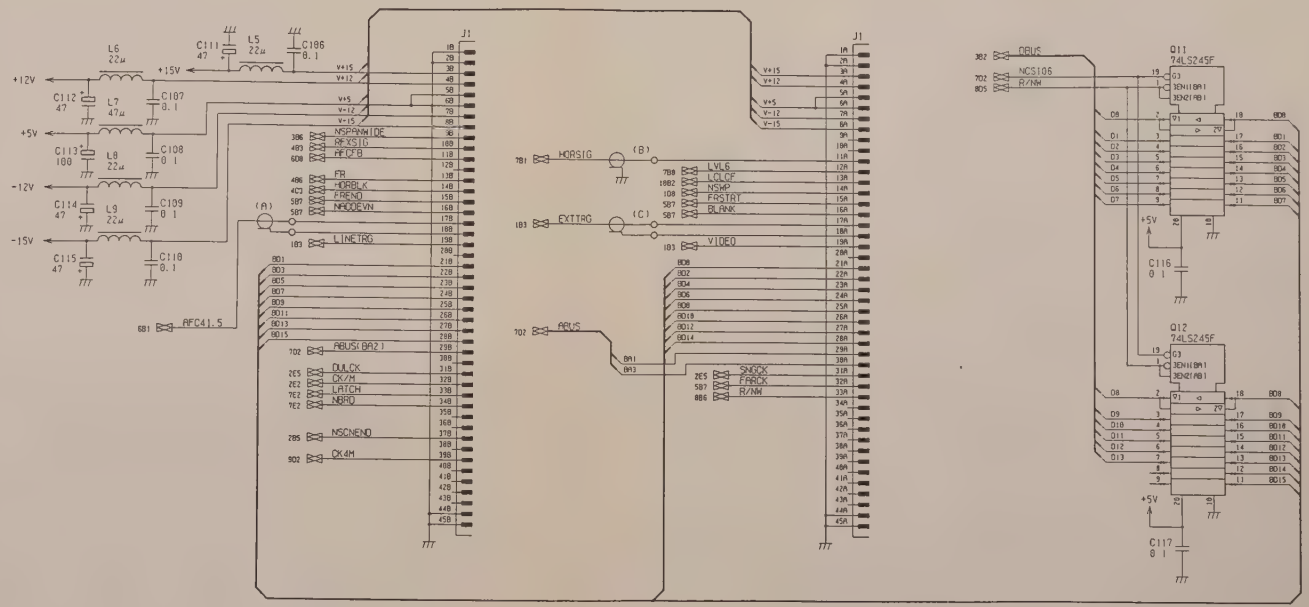

QTY	ITEM	PART No.	DESCRIPTION	MATERIAL	FINISH

CHECKED BY NAKAZAWA	DRAWN BY IWASAWA	SCALE :	21
APPROVED BY TODA	DESIGNED BY YOSHIDA		
TITLE A7 HORIZONTAL		DRAWING No. 43W35222	8/10

DEP

ANRITSU CORP.

APPLICATION

REVISIONS

(GATE TIMING SIGNAL GENERATOR)

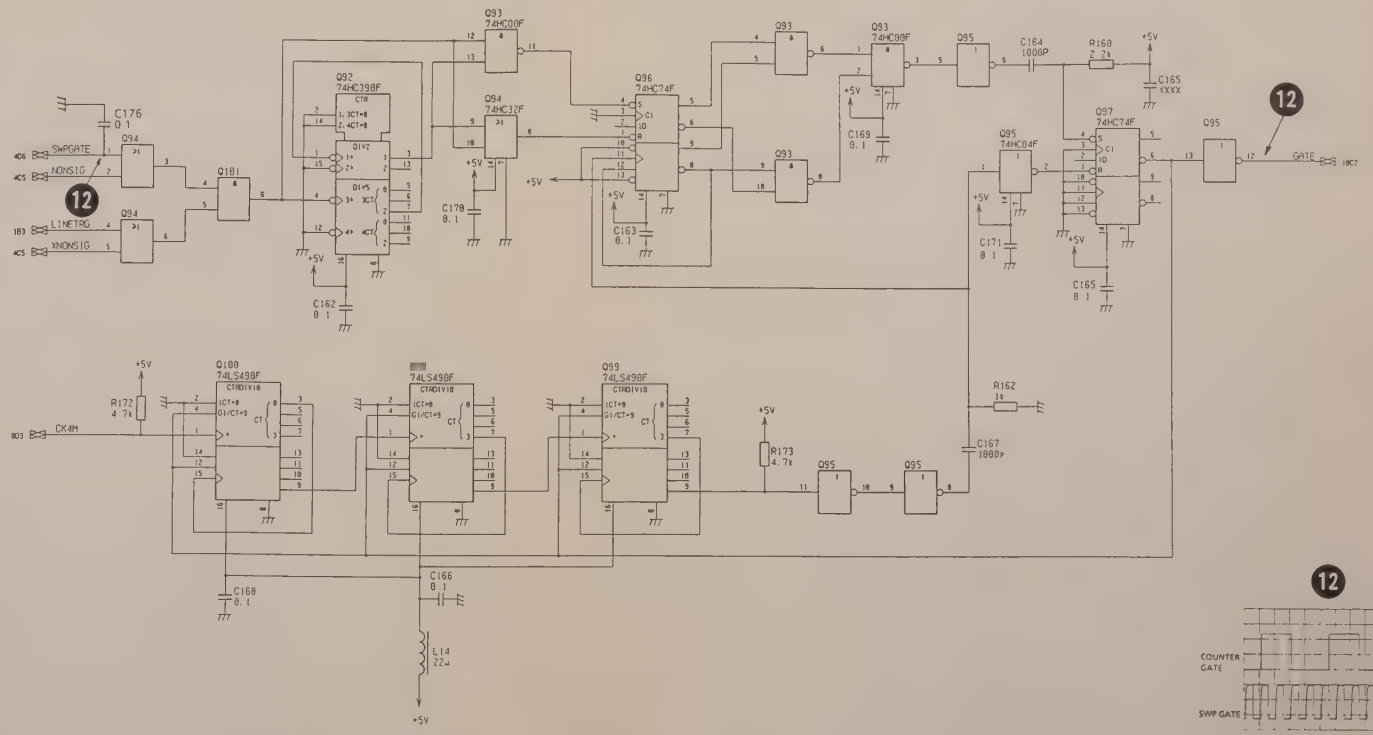

QTY	ITEM	PART No.	DESCRIPTION	MATERIAL	FINISH

CHECKED BY NAKAZAWA	DRAWN BY IWASAWA	SCALE :	
APPROVED BY TODA	DESIGNED BY YOSHIDA		

TITLE: A7 HORIZONTAL

DRAWING No. 43W35222 9/18

21

DEP

APPLICATION

REVISIONS

(FREQUENCY COUNTER)

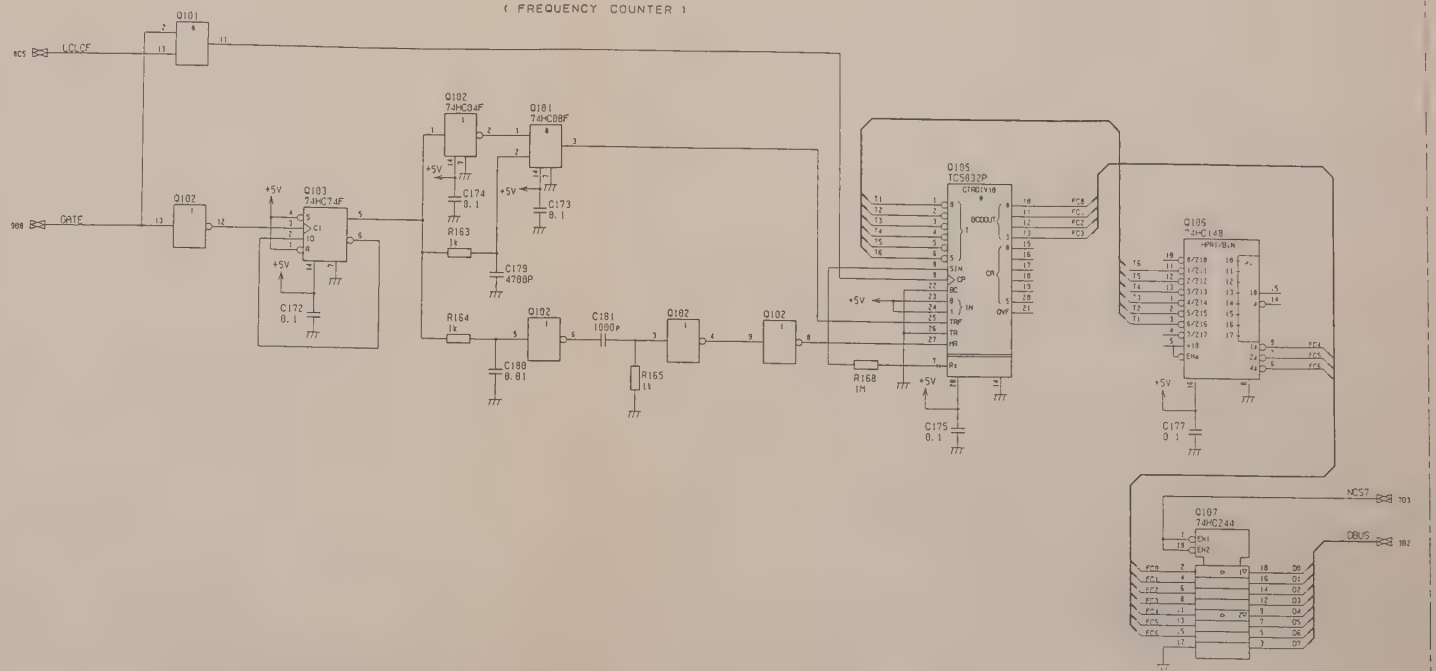

QTY	ITEM	PART No.	DESCRIPTION	MATERIAL	FINISH

21

CHECKED BY NAKAZAWA	DRAWN BY IWASAWA	SCALE :
APPROVED BY TODA	DESIGNED BY YOSHIDA	

TITLE: A7 HORIZONTAL

DRAWING No. 43W35222 18/19

DEP

ANRITSU CORP.

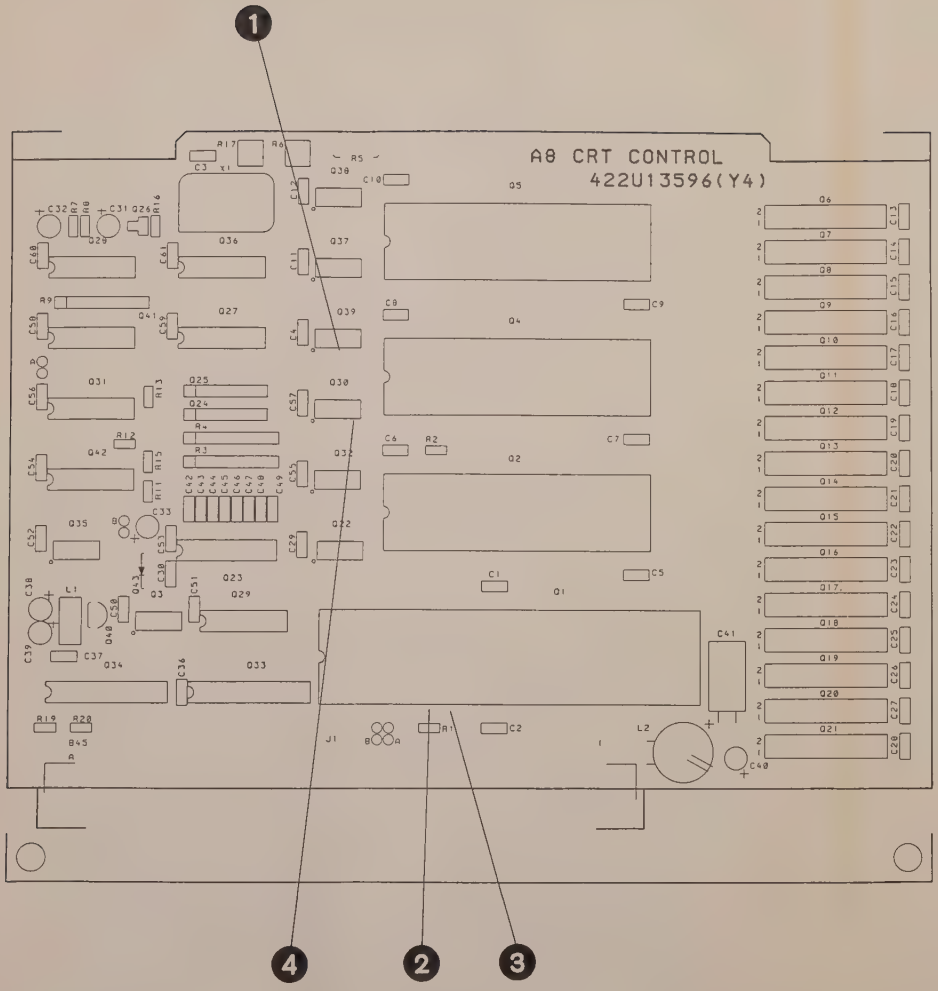

A8 CRT CONTROL
PC Board Parts Layout **22**

APPLICATION

REVISIONS

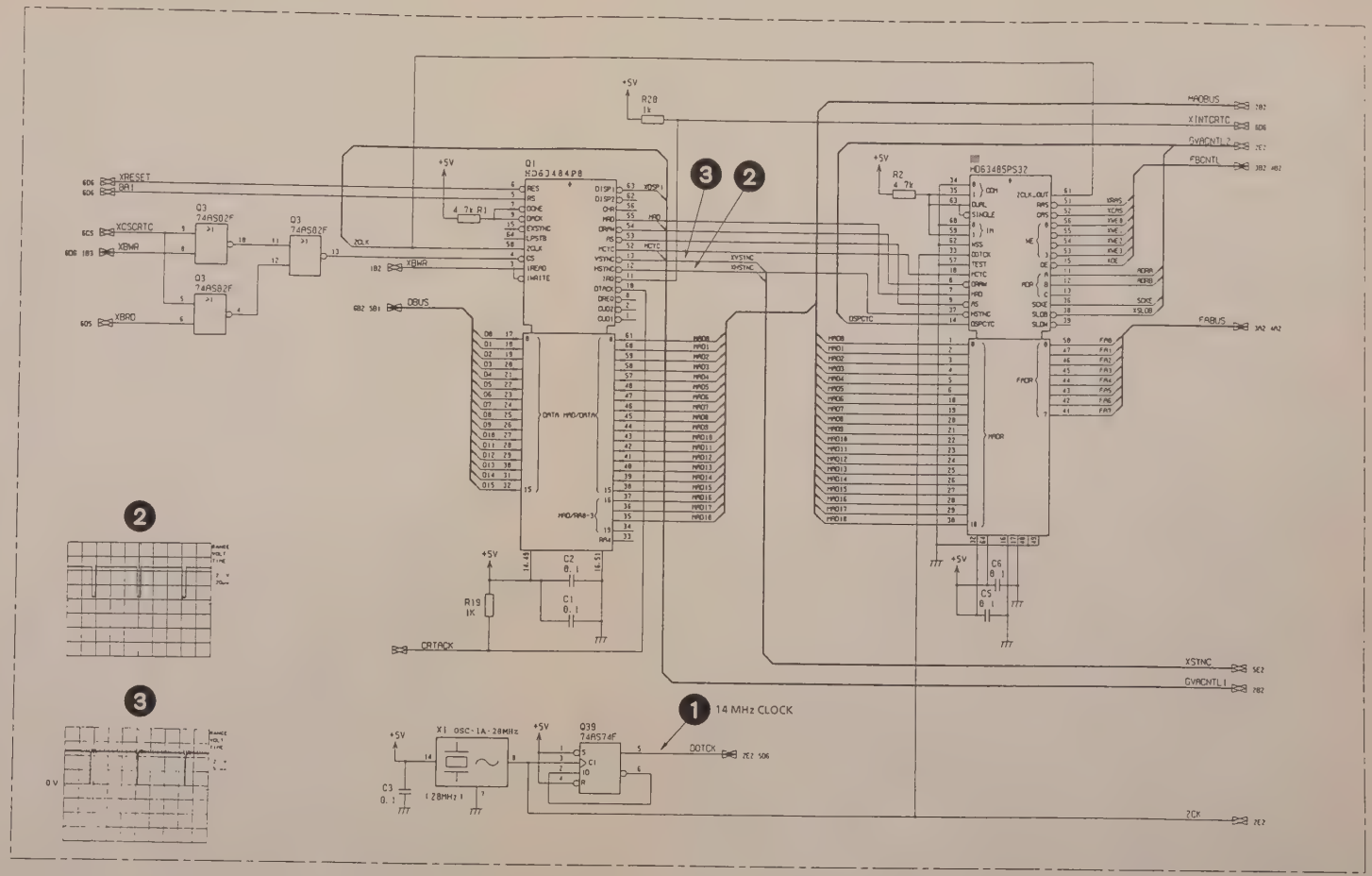

QTY	ITEM	PART No.	DESCRIPTION	MATERIAL	FINISH

CHECKED BY NAKAZAWA	DRAWN BY IWASAWA	SCALE :	
APPROVED BY TODA	DESIGNED BY NAKAMURA		

TITLE: A8 CRT CONTROL

DRAWING No. 43W35223 1/6

PARTS LIST 44W86748

DEP

ANRITSU CORP.

APPLICATION

REVISIONS

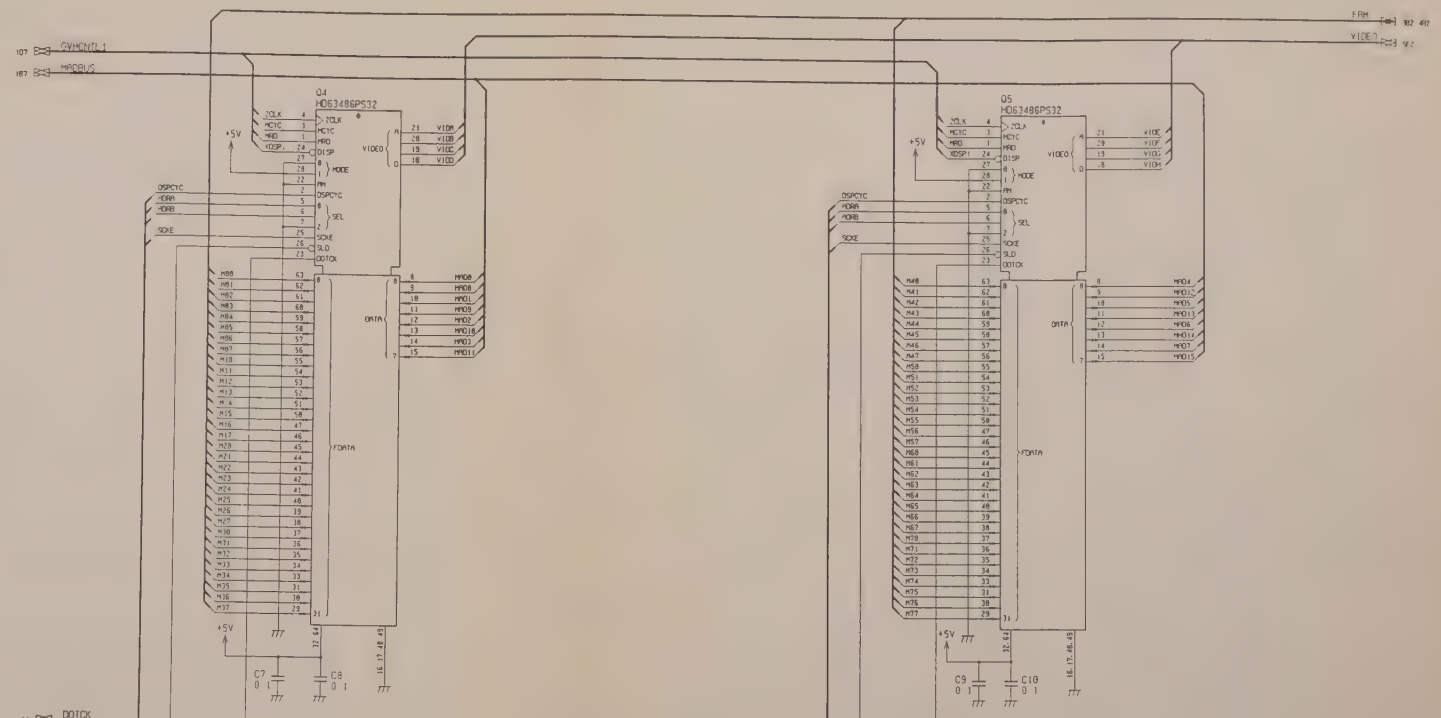

QTY	ITEM	PART No.	DESCRIPTION	MATERIAL	FINISH

CHECKED BY	NAKAZAWA	DRAWN BY	IWASAWA
APPROVED BY	TODA	DESIGNED BY	NAKAMURA

SCALE :

TITLE: A8 CRT CONTROL

DRAWING No. 43W35223

DEP

ANRITSU CORP.

APPLICATION

REVISIONS

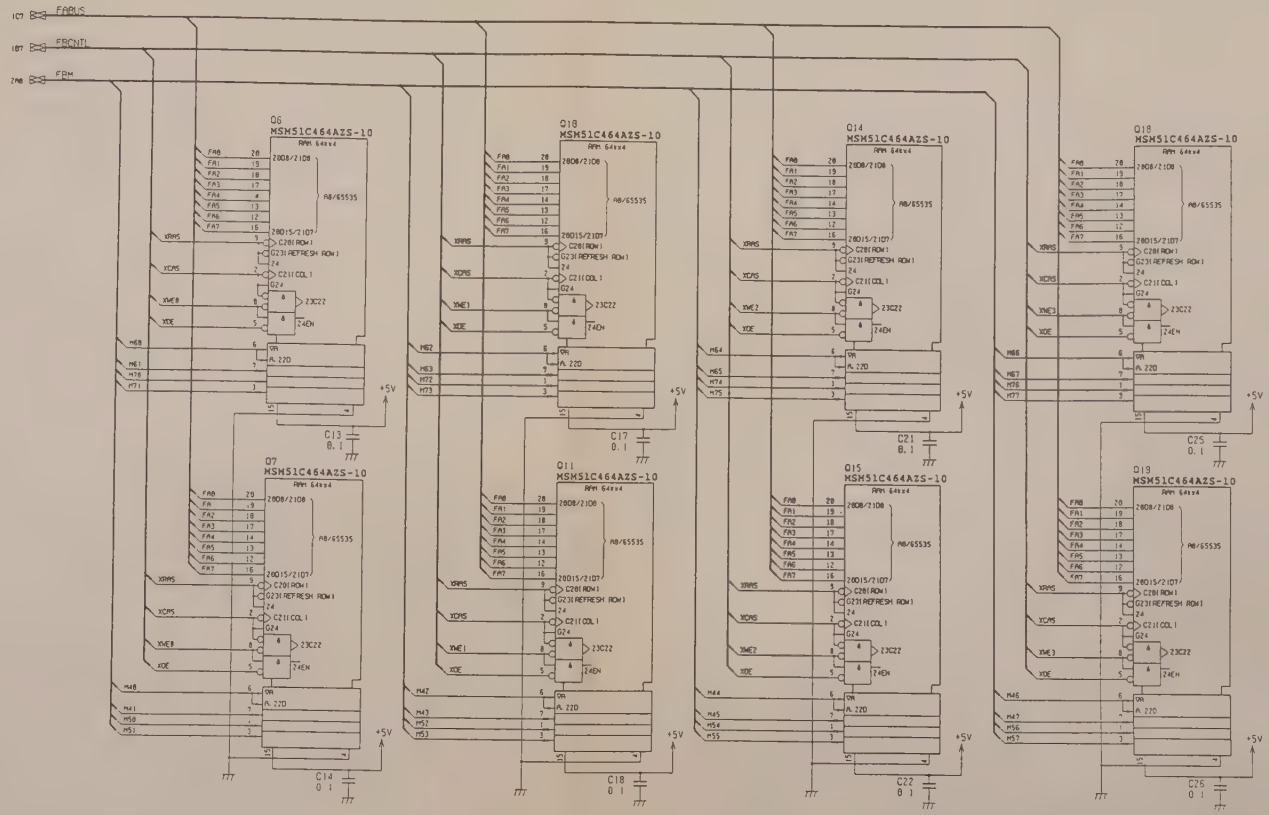

QTY	ITEM	PART No.	DESCRIPTION	MATERIAL	FINISH

CHECKED BY NAKAZAWA	DRAWN BY IWASAWA	SCALE :	
APPROVED BY TODA	DESIGNED BY NAKAMURA		

TITLE: A8 CRT CONTROL

DRAWING No. 43W35223 3/6

DEP

ANRITSU CORP.

APPLICATION

REVISIONS

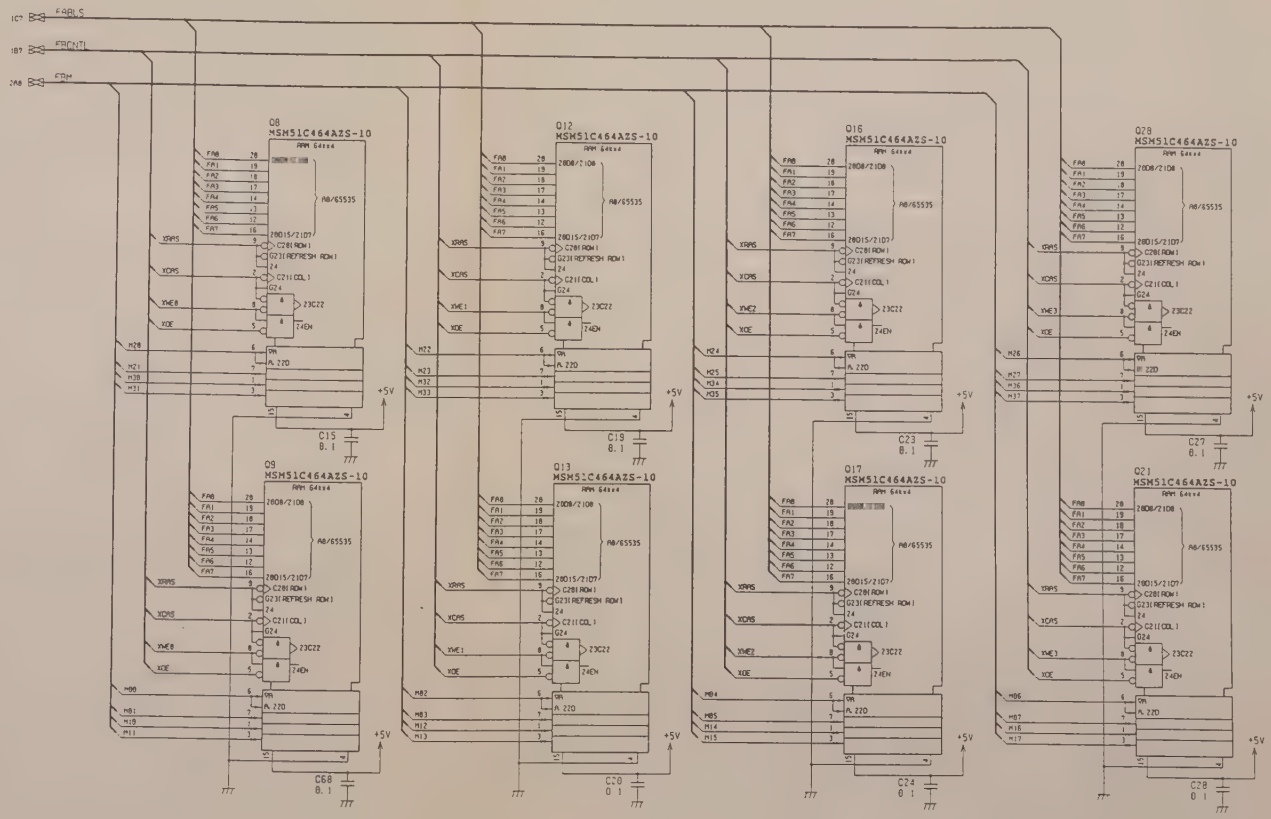

QTY	ITEM	PART No.	DESCRIPTION	MATERIAL	FINISH

CHECKED BY NAKAZAWA	DRAWN BY IWASAWA	SCALE
APPROVED BY TODA	DESIGNED BY NAKAMURA	

TITLE: A8 CRT CONTROL

DRAWING No. 43W35223 4/6

22

DEP

ANRITSU CORP.

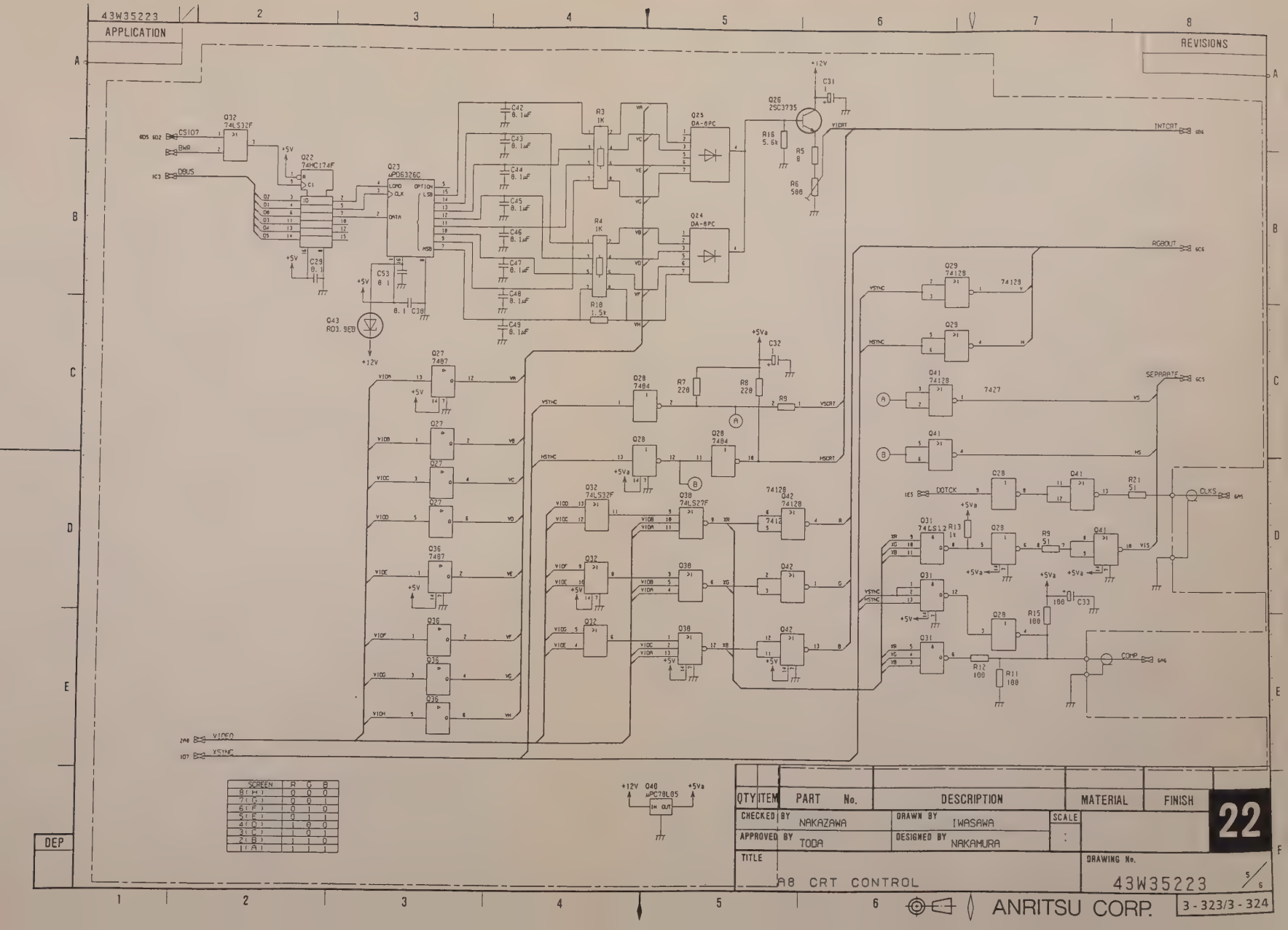
43W35223
APPLICATION
REVISIONS
Q32 74LS32F
CS107
BWR
DBUS
Q22 74HC174F
Q23 μPD6326C
C42 0.1μF
C43 0.1μF
C44 0.1μF
C45 0.1μF
C46 0.1μF
C47 0.1μF
C48 0.1μF
C49 0.1μF
R3 1K
R4 1K
R10 1.5k
C29 0.1
C53 0.1
C38 0.1
Q43 RO3.9EB
Q23 OA-8PC
Q24 OA-8PC
Q26 2SC3735
C31
R16 5.6k
R5 8
R6 500
+12V
INTCRT
ROBOUT
Q29 74128
Q41 74128
7427
SEPARATE
Q27 7407
Q28 7404
R7 220
R8 220
R9
C32
Q32 74LS32F
Q38 74LS27F
Q42 74128
Q36 7407
Q31 74LS12
R13 1k
R21 51
R9 51
C33 100
R15 100
R12 100
R11 100
DOTCK
CLKS
COMP
VIDEO
XSYNC
SCREEN R G B
8(H) 0 0 0
7(G) 0 0 1
6(F) 0 1 0
5(E) 0 1 1
4(D) 1 0 0
3(C) 1 0 1
2(B) 1 1 0
1(A) 1 1 1
Q40 μPC78L05
QTY ITEM PART No. DESCRIPTION MATERIAL FINISH
CHECKED BY NAKAZAWA
DRAWN BY IWASAWA
APPROVED BY TODA
DESIGNED BY NAKAMURA
SCALE :
TITLE A8 CRT CONTROL
DRAWING No. 43W35223
22
DEP
ANRITSU CORP.
3-323/3-324

APPLICATION

REVISIONS

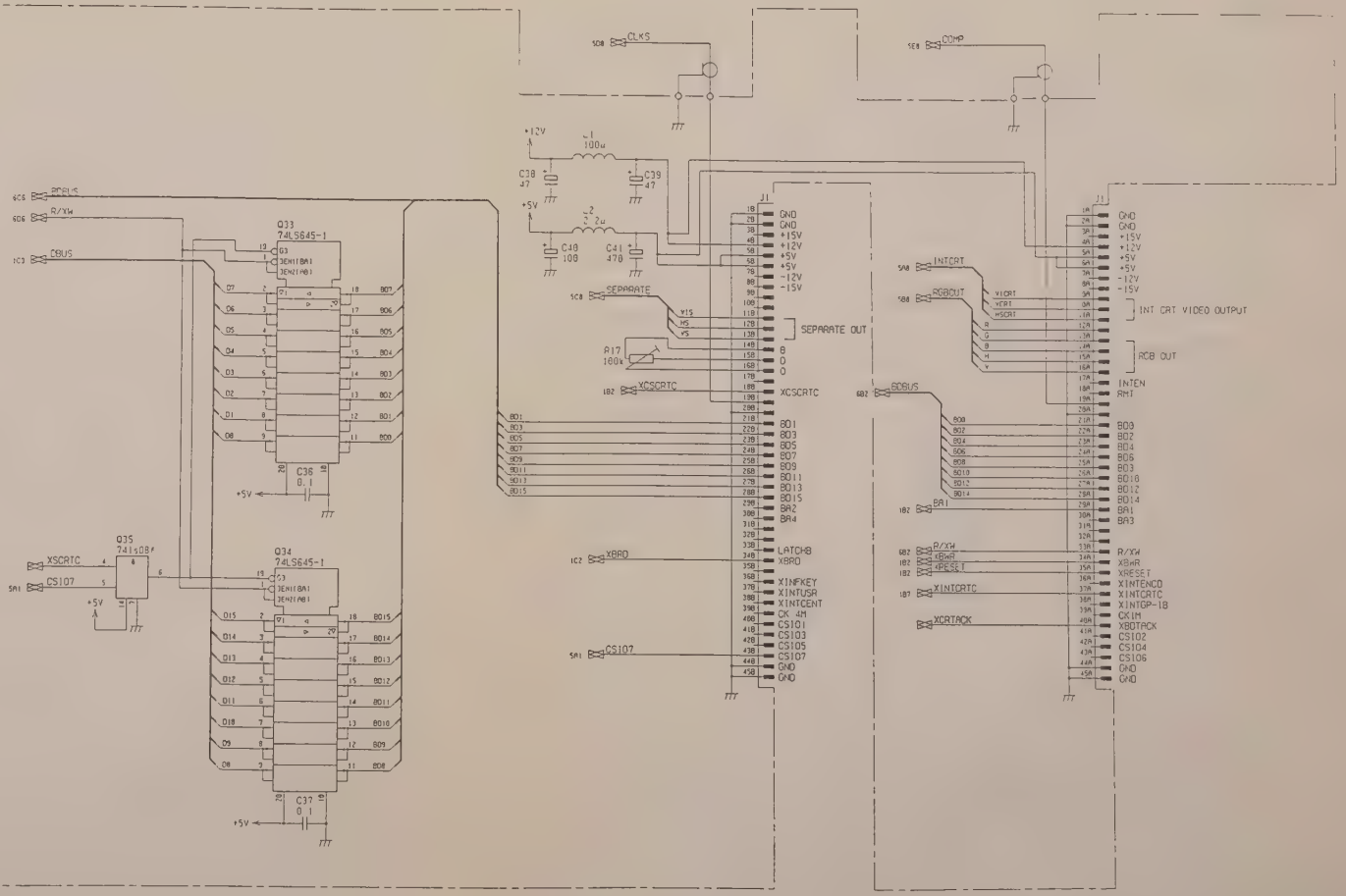

QTY	ITEM	PART No.	DESCRIPTION	MATERIAL	FINISH	NOTE

CHECKED BY NAKAZAWA	DRAWN BY IWASAWA	SCALE :	
APPROVED BY TODA	DESIGNED BY NAKAMURA		

TITLE: A8 CRT CONTROL

DRAWING No. 43W35223 6/6

DEP

ANRITSU CORP.

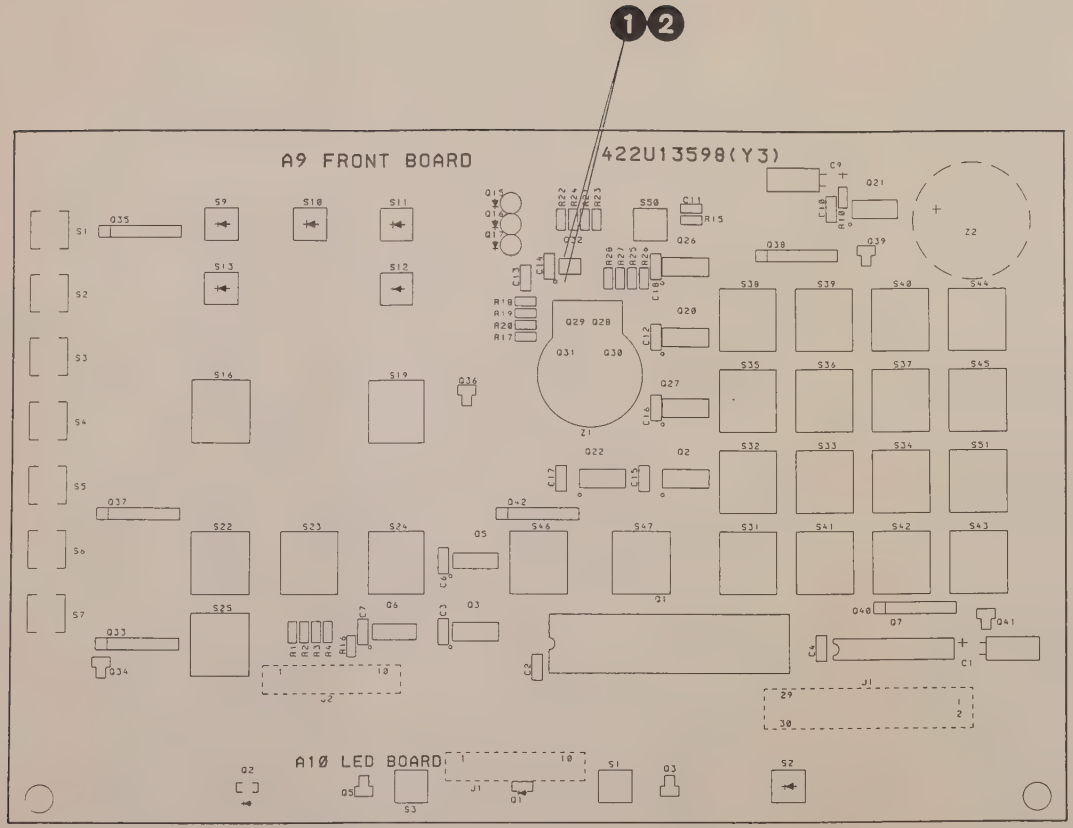

A9 FRONT BOARD PC
Board Parts Layout **23** and

A10 LED BORD PC
Board Parts Layout **24**

43W35224

APPLICATION

REVISIONS

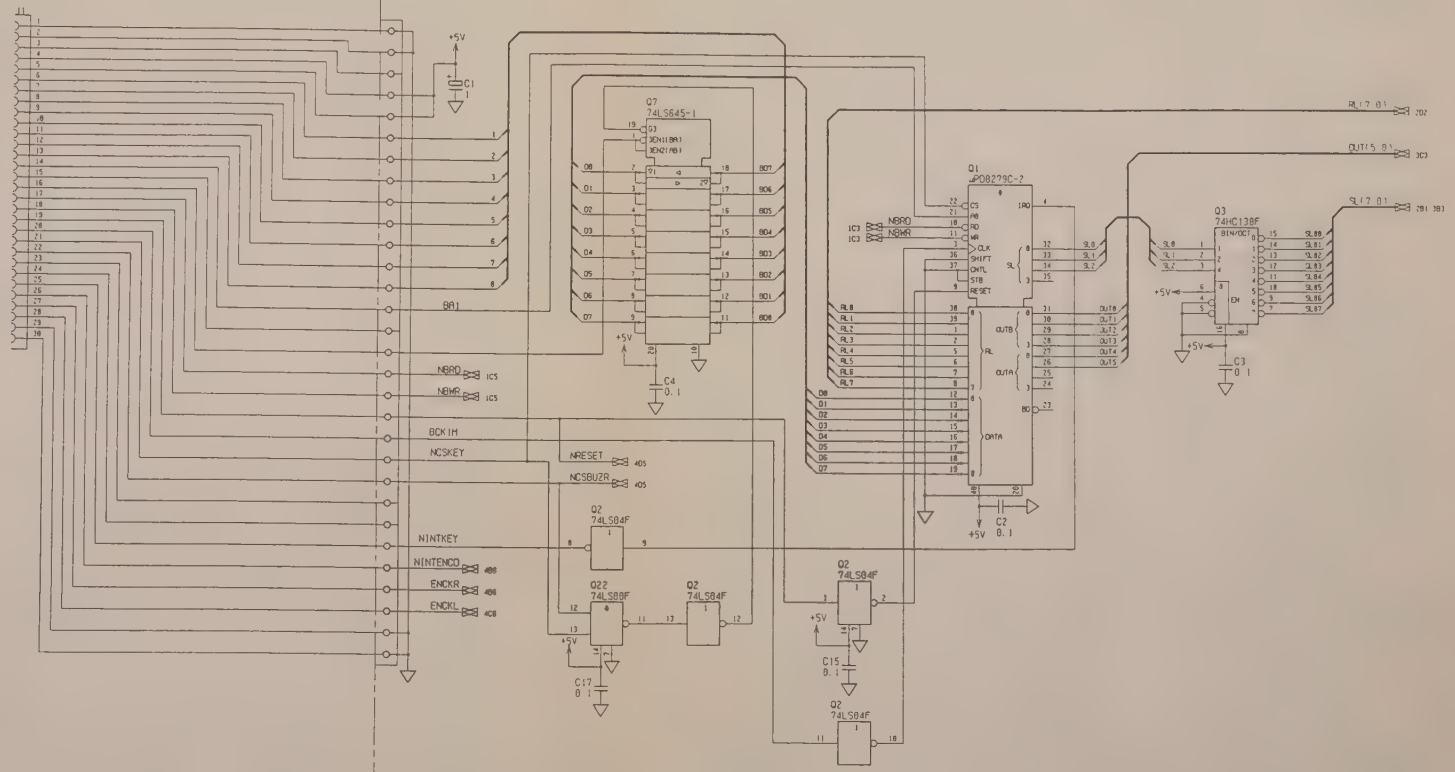

QTY	ITEM	PART No.	DESCRIPTION	MATERIAL	FINISH

CHECKED BY NAKAZAWA	DRAWN BY IWASAWA	SCALE :	
APPROVED BY TODA	DESIGNED BY YOSHIDA		

TITLE: A9 FRONT BOARD

DRAWING No. 43W35224 1/4

PARTS LIST 44W86749

DEP

ANRITSU CORP.

3-327/3-328

23

APPLICATION

REVISIONS

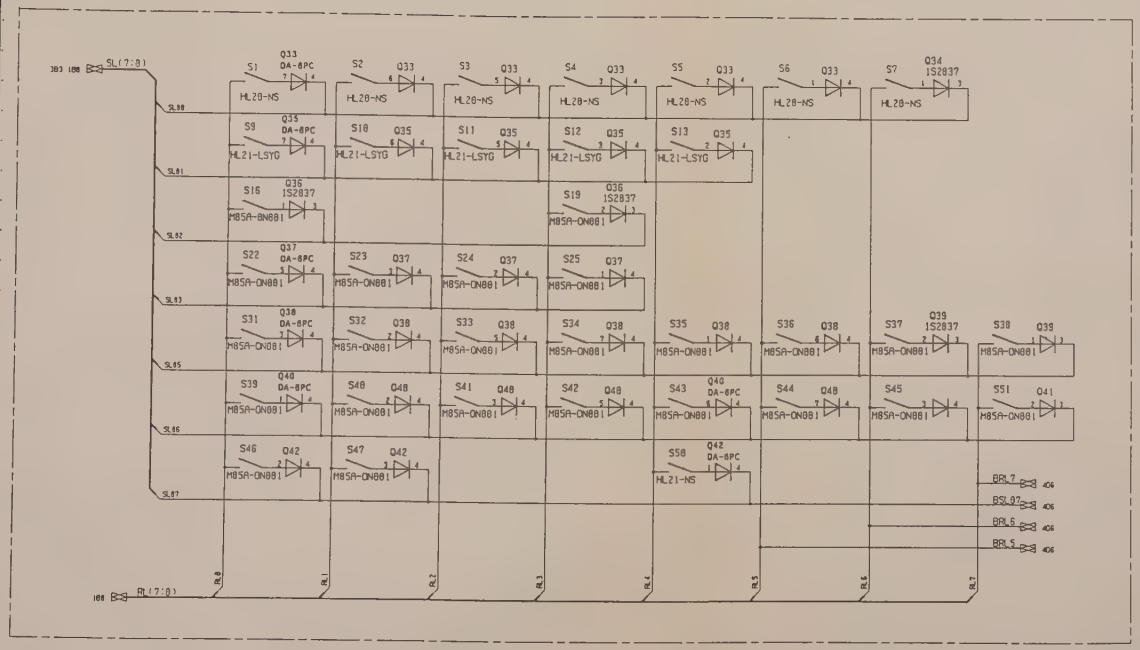

SCAN LINE \ RETURN LINE	0	1	2	3	4	5	6	7
0	SOFT KEY I	SK2	SK3	SK4	SK5	SK6	SK7	
1	FAR END	TRACK	SPECTRUM	* (CONSTE)	RF			
2	MESUREMENT I			MESUREMENT II				
3	PARAMTR	MARKER	DISPLAY	SPECIAL				
4								
5	0	1	2	3	4	5	6	7
6	8	9	.	+/-	BS	s/MHz	mS/kHz	Hz
7	∨	∧			ENABLE OFF	PRESET	PANEL LOCK	LOCAL

QTY	ITEM	PART No.	DESCRIPTION	MATERIAL	FINISH

CHECKED BY	NAKAZAWA	DRAWN BY	IWASAWA
APPROVED BY	TODA	DESIGNED BY	YOSHIDA

SCALE :

TITLE: A9 FRONT BOARD

DRAWING No. 43W35224 2/4

23

DEP

ANRITSU CORP.

APPLICATION

REVISIONS

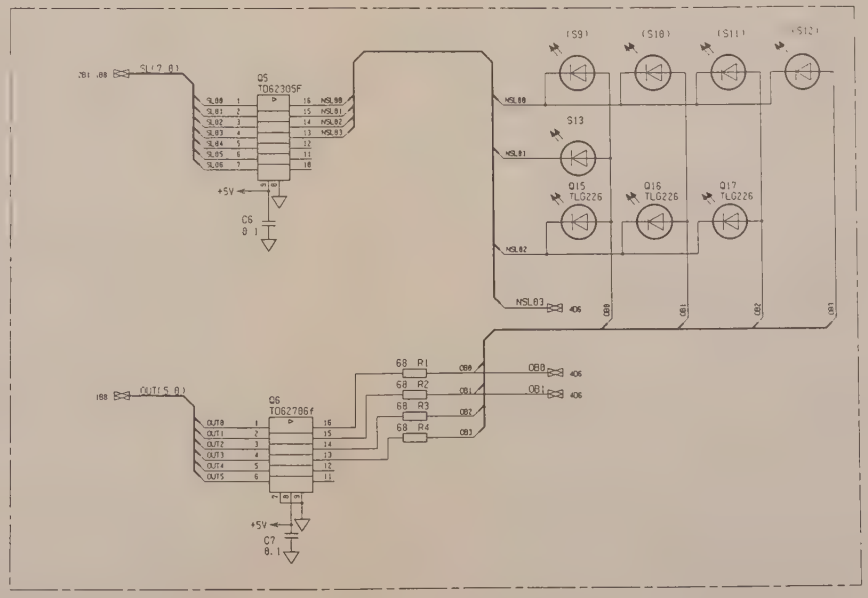

SCAN LINE	DATA LINE B0	B1	B2	B3
0	FAR END	TRACK	SPEC TRAM	
1	RF			
2	TEN KEY	STEP	KNOB	
3	RE-MOTE	PANEL LOCK		

QTY	ITEM	PART No.	DESCRIPTION	MATERIAL	FINISH

CHECKED BY NAKAZAWA	DRAWN BY IWASAWA	SCALE :	
APPROVED BY TODA	DESIGNED BY YOSHIDA		

TITLE: A9 FRONT BOARD

DRAWING No. 43W35224 3/4

DEP

ANRITSU CORP.

APPLICATION

REVISIONS

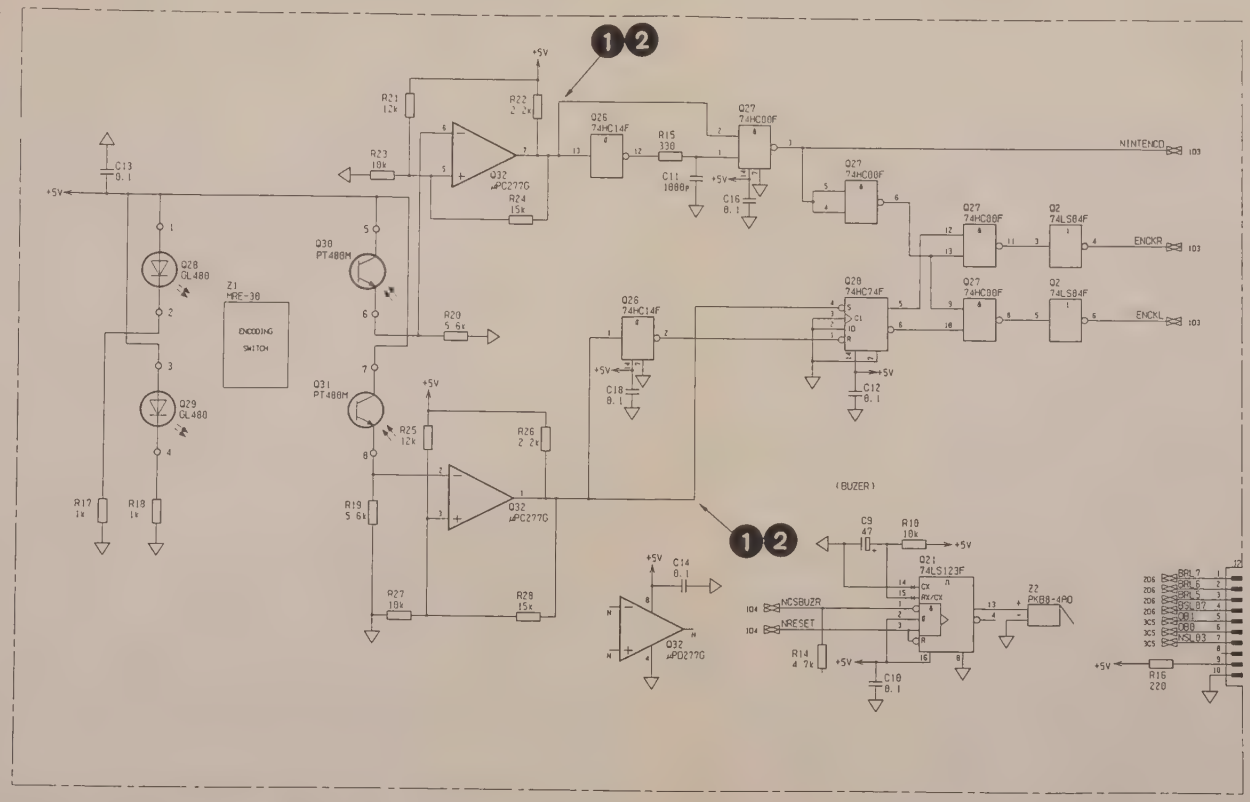

QTY	ITEM	PART No.	DESCRIPTION	MATERIAL	FINISH

CHECKED BY NAKAZAWA	DRAWN BY IWASAWA	SCALE	
APPROVED BY TODA	DESIGNED BY YOSHIDA		

TITLE: A9 FRONT BOARD

DRAWING No. 43W35224 4/4

23

DEP

ANRITSU CORP.

43W35225

APPLICATION

REVISIONS

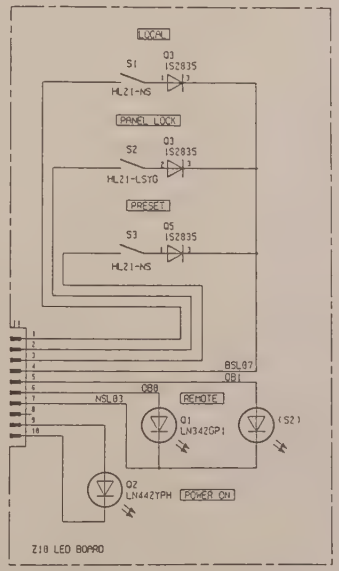

QTY	ITEM	PART No.	DESCRIPTION	MATERIAL	FINISH

24

CHECKED BY NAKAZAWA	DRAWN BY NISHIGUTI	SCALE :	
APPROVED BY TODA	DESIGNED BY NAKAMURA		

DEP

PARTS LIST | 44W86750

TITLE: A10 LED BOARD

DRAWING No. 43W35225

ANRITSU CORP.

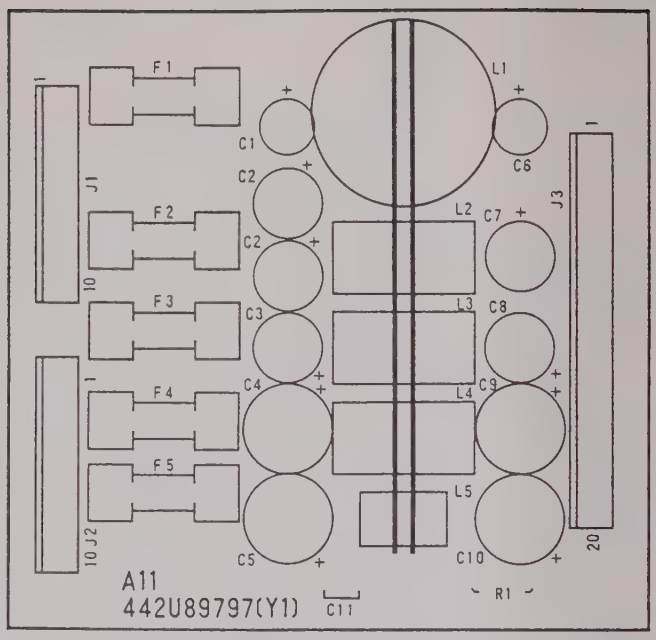

A11 FILTER PC Board Parts Layout **25**

APPLICATION

REVISIONS

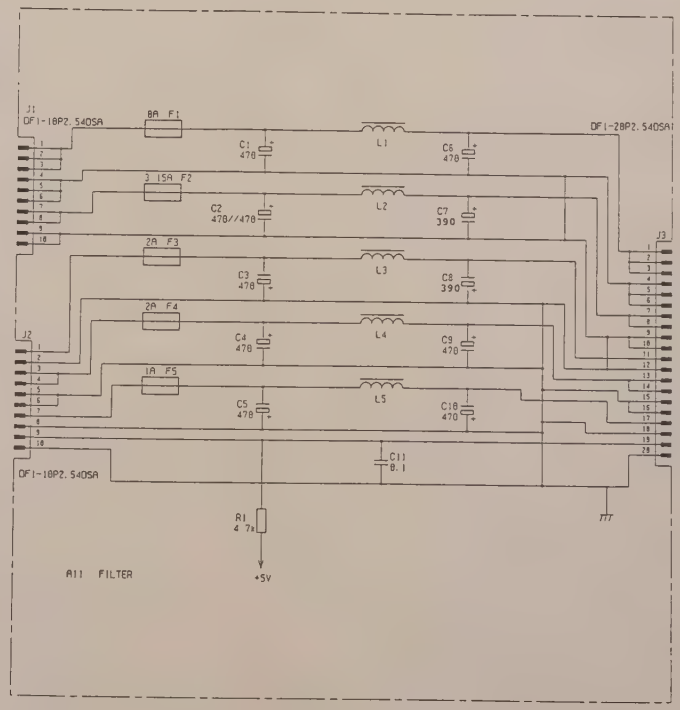

QTY	ITEM	PART No.	DESCRIPTION	MATERIAL	FINISH

25

CHECKED BY NAKAZAWA	DRAWN BY NISHIGUTI	SCALE :	
APPROVED BY TODA	DESIGNED BY NAKAMURA		

DEP

PARTS LIST 44W86751

TITLE: A11 FILTER

DRAWING No. 43W35226 1/1

ANRITSU CORP.

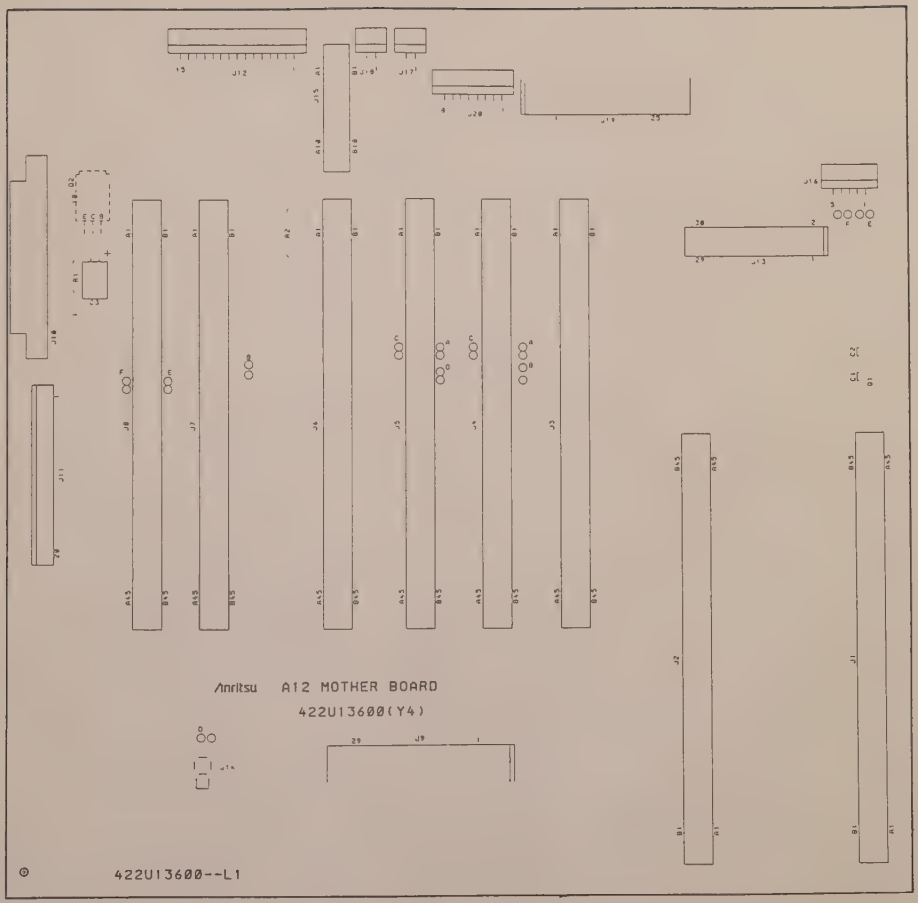

A12 MOTHERBOARD
PC Board Parts Layout **26**

APPLICATION

REVISIONS

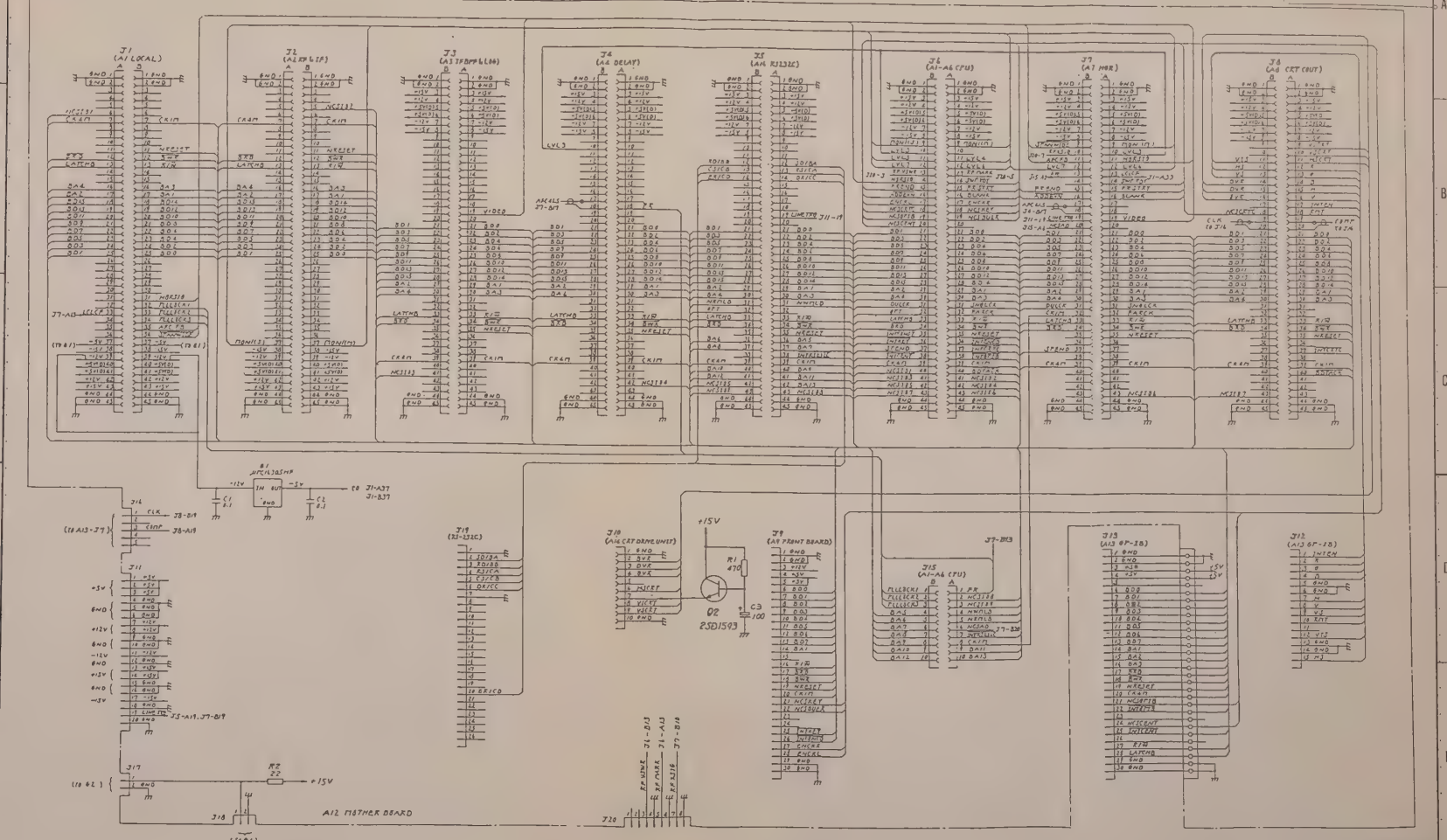

QTY	ITEM	PART No.	DESCRIPTION	MATERIAL	FINISH

26

CHECKED BY NAKAZAWA	DRAWN BY NISHIGUTI	SCALE	
APPROVED BY TODA	DESIGNED BY NAKAMURA	:	

PARTS LIST 44W86752

TITLE A12 MOTHERBOARD

DRAWING No. 43W35227 1/1

DEP

ANRITSU CORP.

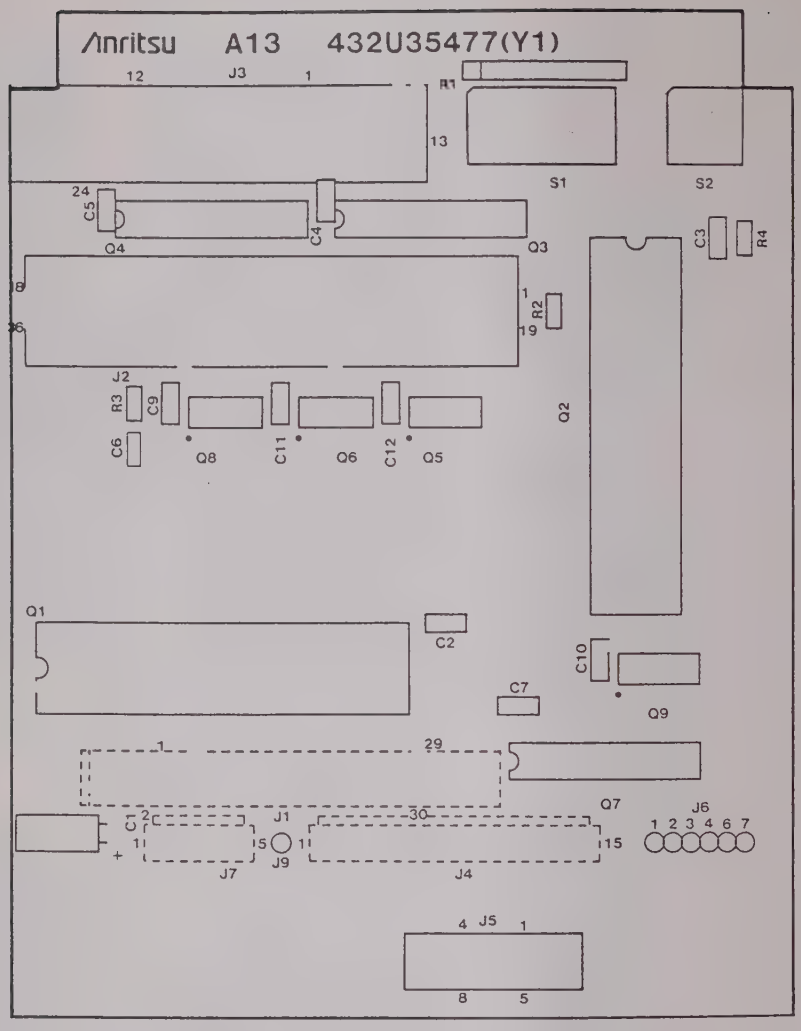

A13 GP-IB CONNECTOR BOARD PC Board Parts Layout 27

43W35228

APPLICATION

REVISIONS

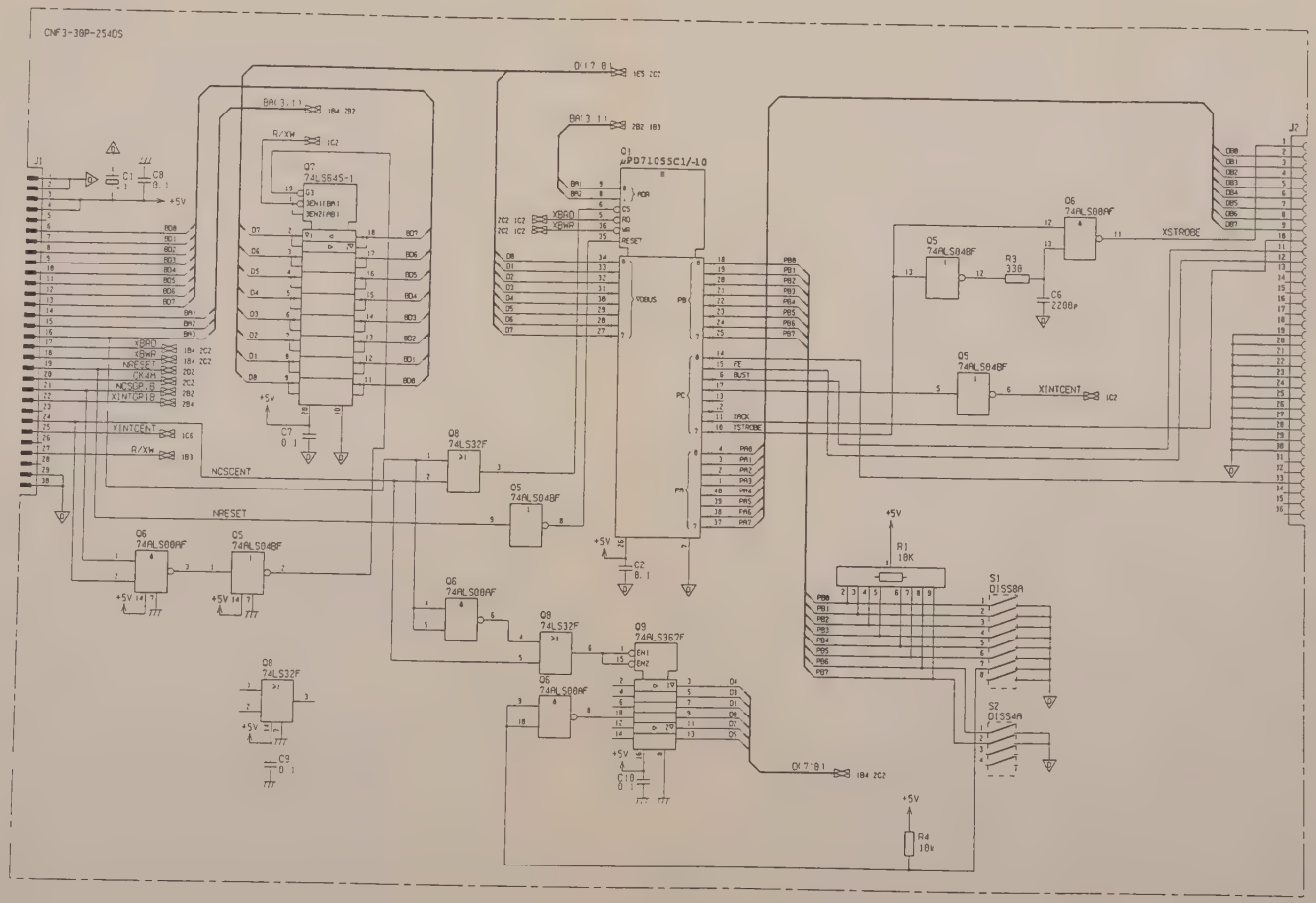

PARALLEL INTERFACE
0057-28368-9
(option)

GP-IB ADDRESS

TALK ONLY
GP-IB
RS-232C
FM FREQ SELECT

QTY	ITEM	PART No.	DESCRIPTION	MATERIAL	FINISH

CHECKED BY	NAKAZAWA	DRAWN BY	IWASAWA
APPROVED BY	TODA	DESIGNED BY	NAKAMURA
SCALE	:		

TITLE
A13 GP-IB
CONNECTER BOARD

DRAWING No.
43W35228 1/3

PARTS LIST 44W86753

DEP

27

ANRITSU CORP.

APPLICATION

REVISIONS

GP-IB INTERFACE

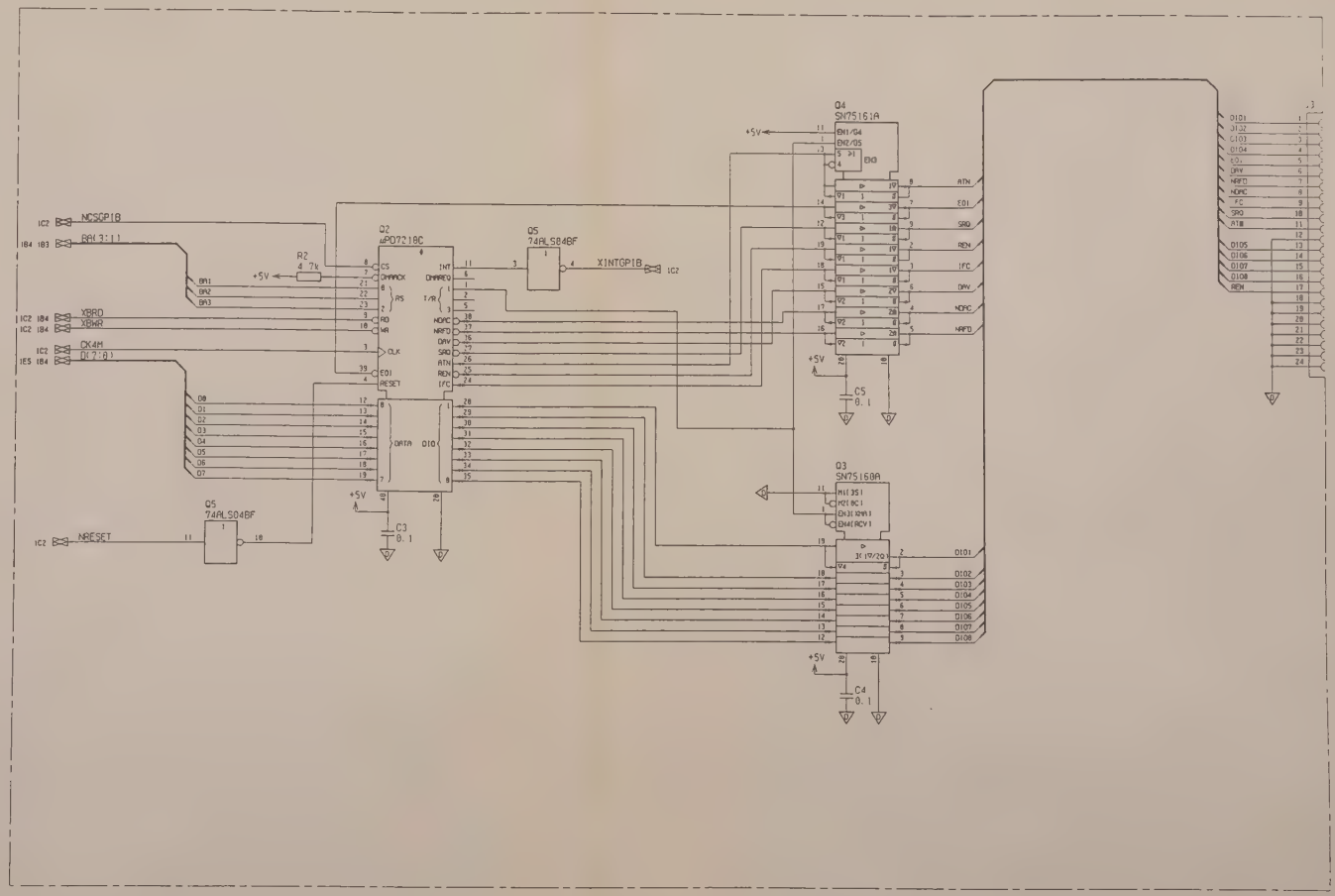

QTY	ITEM	PART No.	DESCRIPTION	MATERIAL	FINISH

27

CHECKED BY NAKAZAWA	DRAWN BY IWASAWA	SCALE :	
APPROVED BY TODA	DESIGNED BY NAKAMURA		

TITLE
A13 GP-IB
CONNECTER BOARD

DRAWING No.
43W35228 2/3

DEP

APPLICATION

REVISIONS

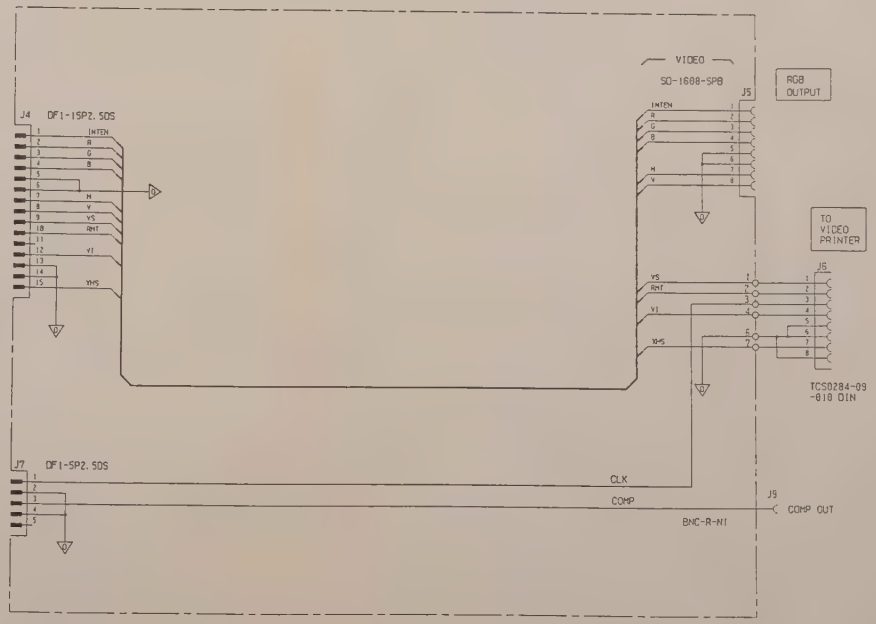

QTY	ITEM	PART No.	DESCRIPTION	MATERIAL	FINISH

27

CHECKED BY NAKAZAWA	DRAWN BY IWASAWA	SCALE
APPROVED BY TODA	DESIGNED BY NAKAMURA	

TITLE
A13 GP-IB
CONNECTER BOARD

DRAWING No.
43W35228 3/3

DEP

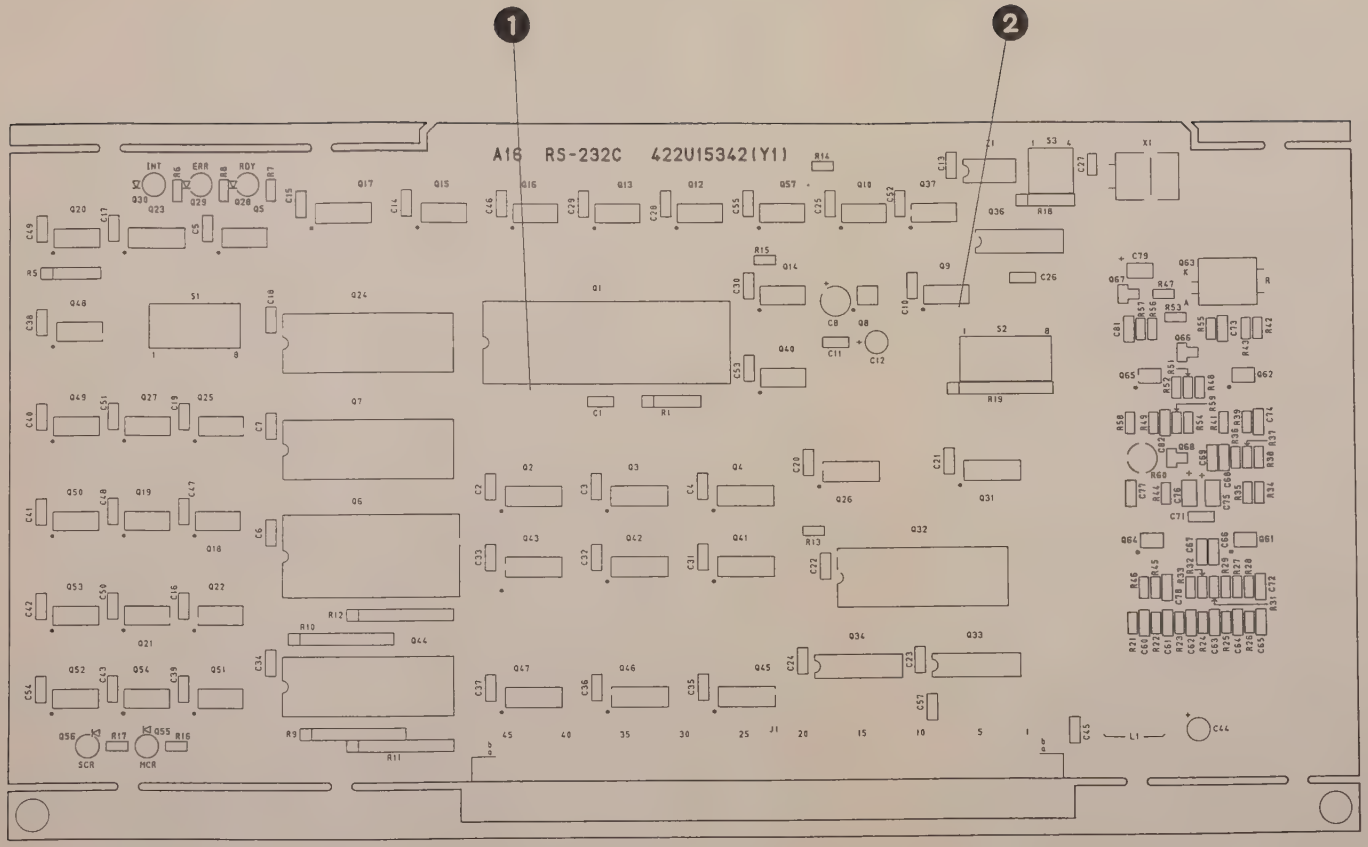

A16 RS-232C Board
PC Board Parts Layout 28

APPLICATION

REVISIONS

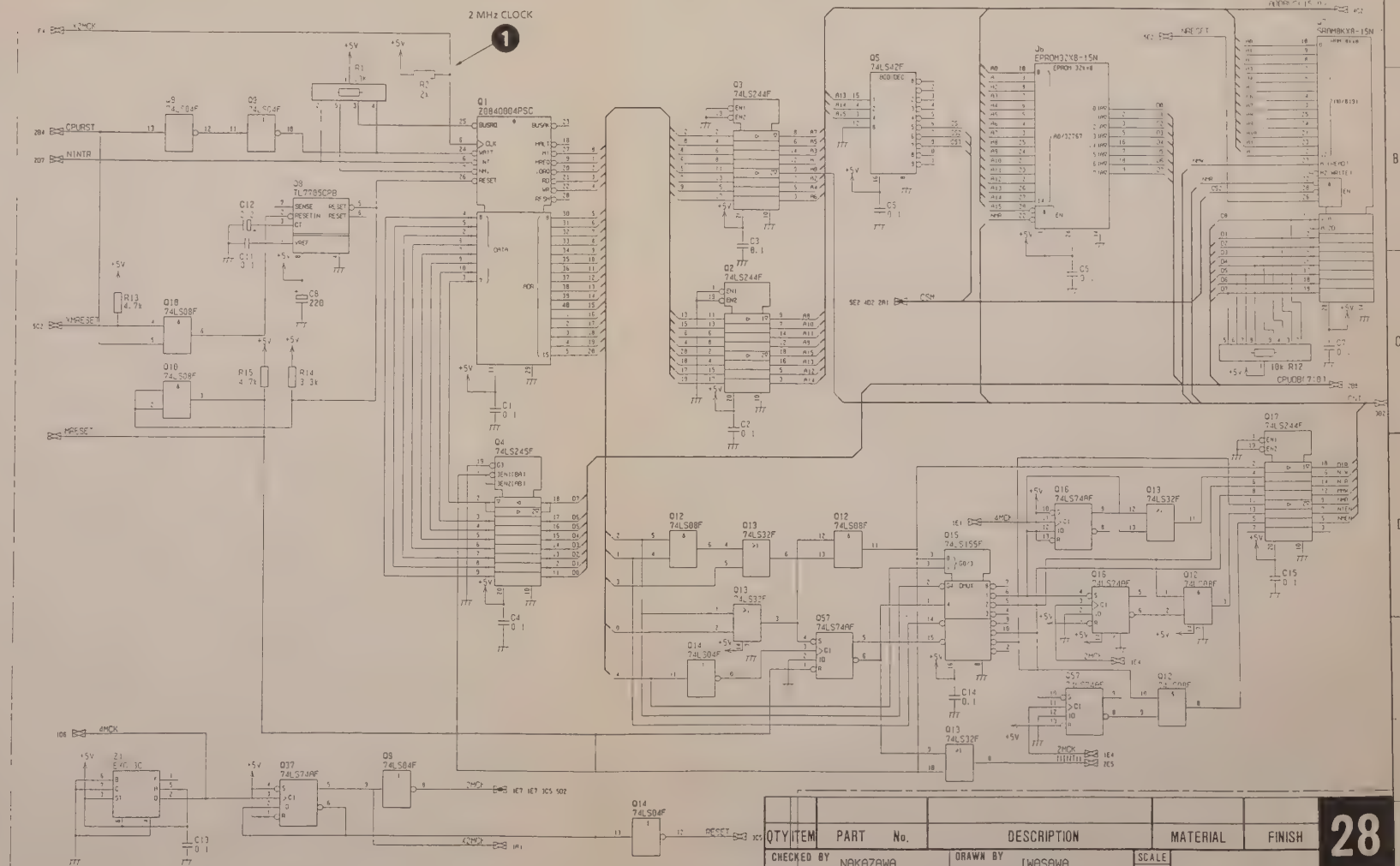

QTY	ITEM	PART No.	DESCRIPTION	MATERIAL	FINISH

28

CHECKED BY NAKAZAWA	DRAWN BY IWASAWA	SCALE :	
APPROVED BY TODA	DESIGNED BY NAKAMURA		

TITLE: A16 RS232C BOARD

DRAWING No. 43W39900 1/6

PARTS LIST 44W95081

DEP

ANRITSU CORP.

43W39900

APPLICATION

REVISIONS

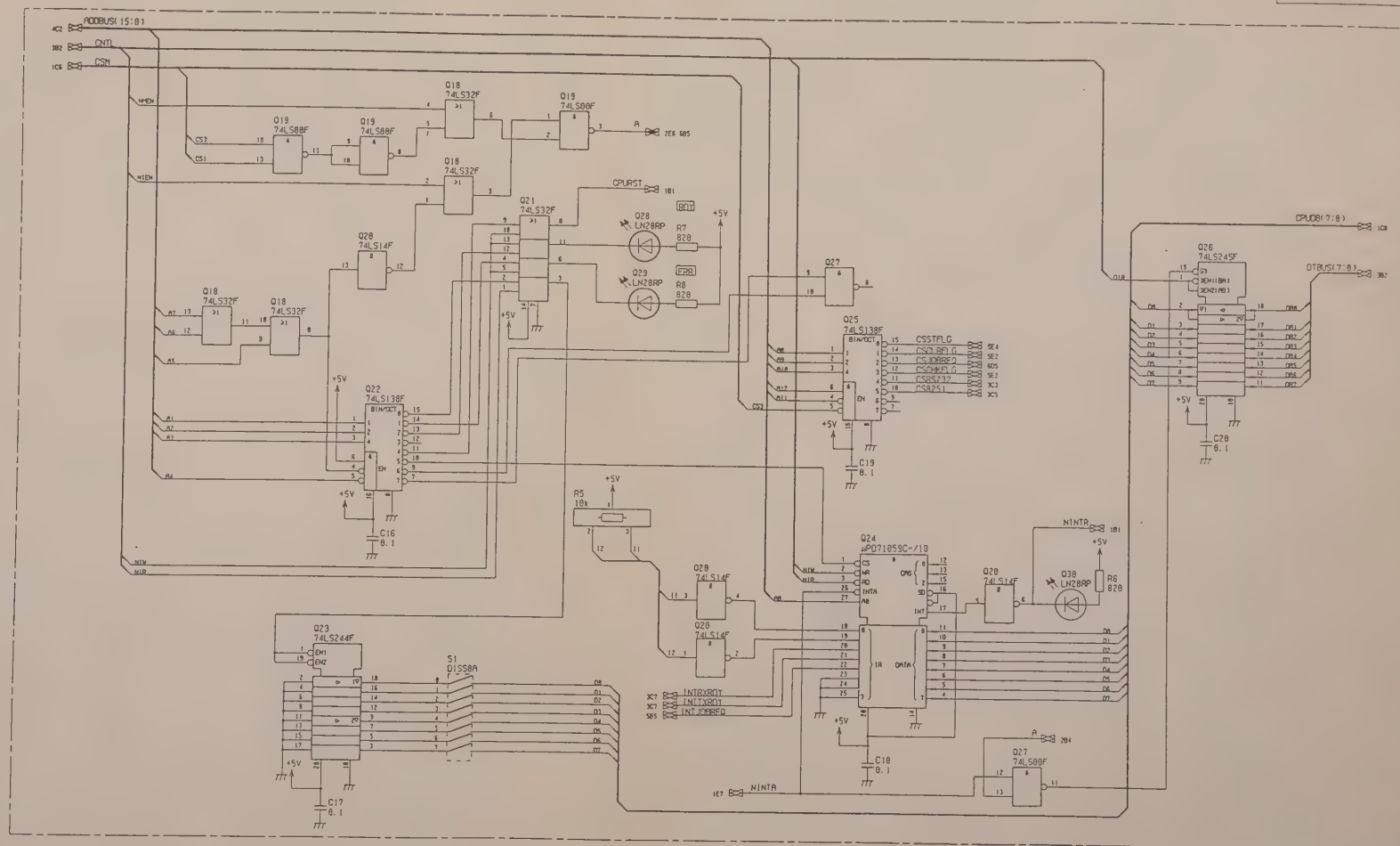

QTY	ITEM	PART No.	DESCRIPTION	MATERIAL	FINISH

28

CHECKED BY NAKAZAWA	DRAWN BY IWASAWA	SCALE	
APPROVED BY TODA	DESIGNED BY NAKAMURA	:	
TITLE A16 RS232C BOARD		DRAWING No. 43W39900	2/6

DEP

ANRITSU CORP.

3-349/3-350

APPLICATION

REVISIONS

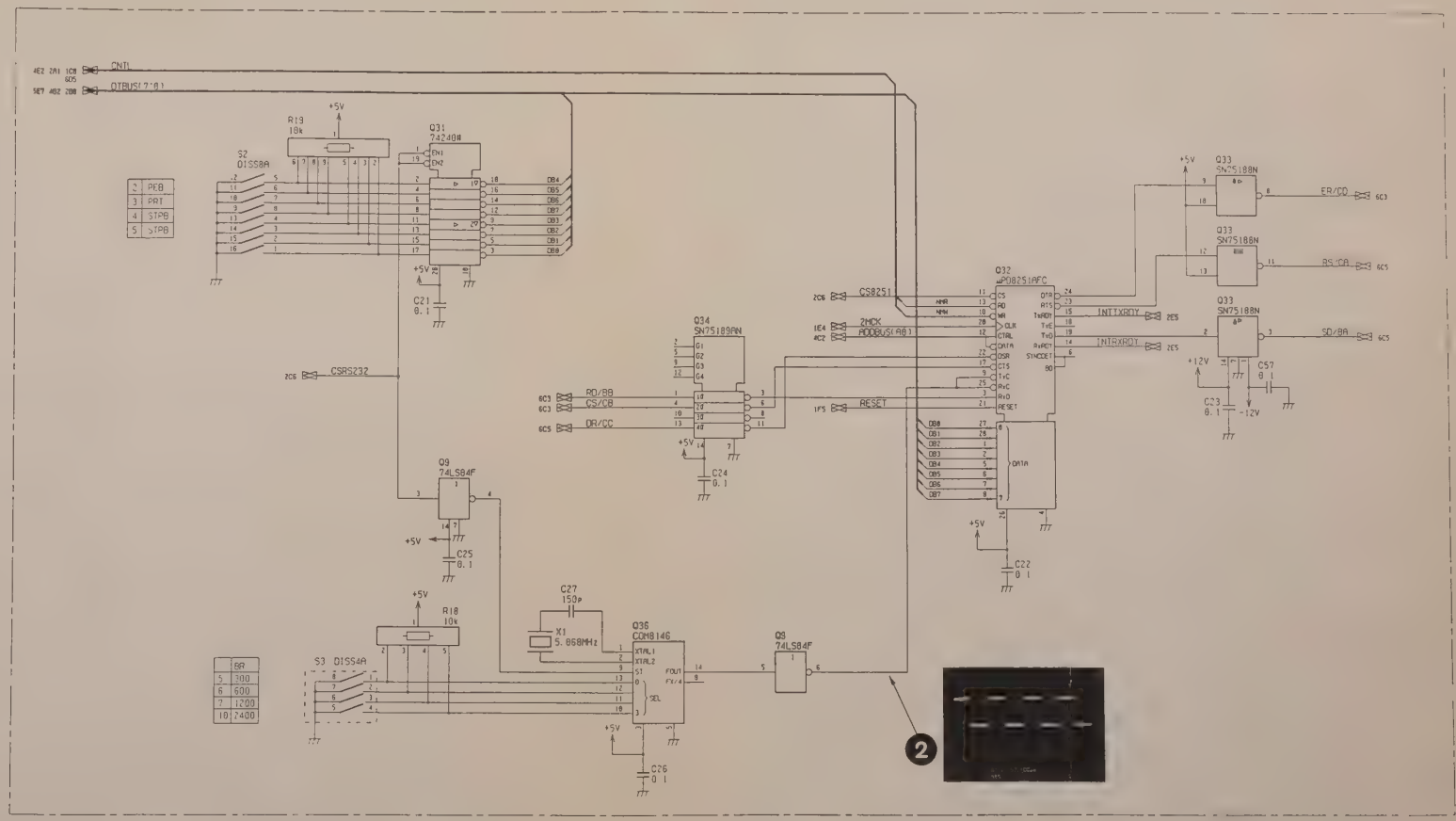

QTY	ITEM	PART No.	DESCRIPTION	MATERIAL	FINISH

28

CHECKED BY NAKAZAWA	DRAWN BY IWASAWA	SCALE :	
APPROVED BY TODA	DESIGNED BY NAKAMURA		

TITLE: A16 RS232C BOARD

DRAWING No. 43W39900 3/6

DEP

43W39900

APPLICATION

REVISIONS

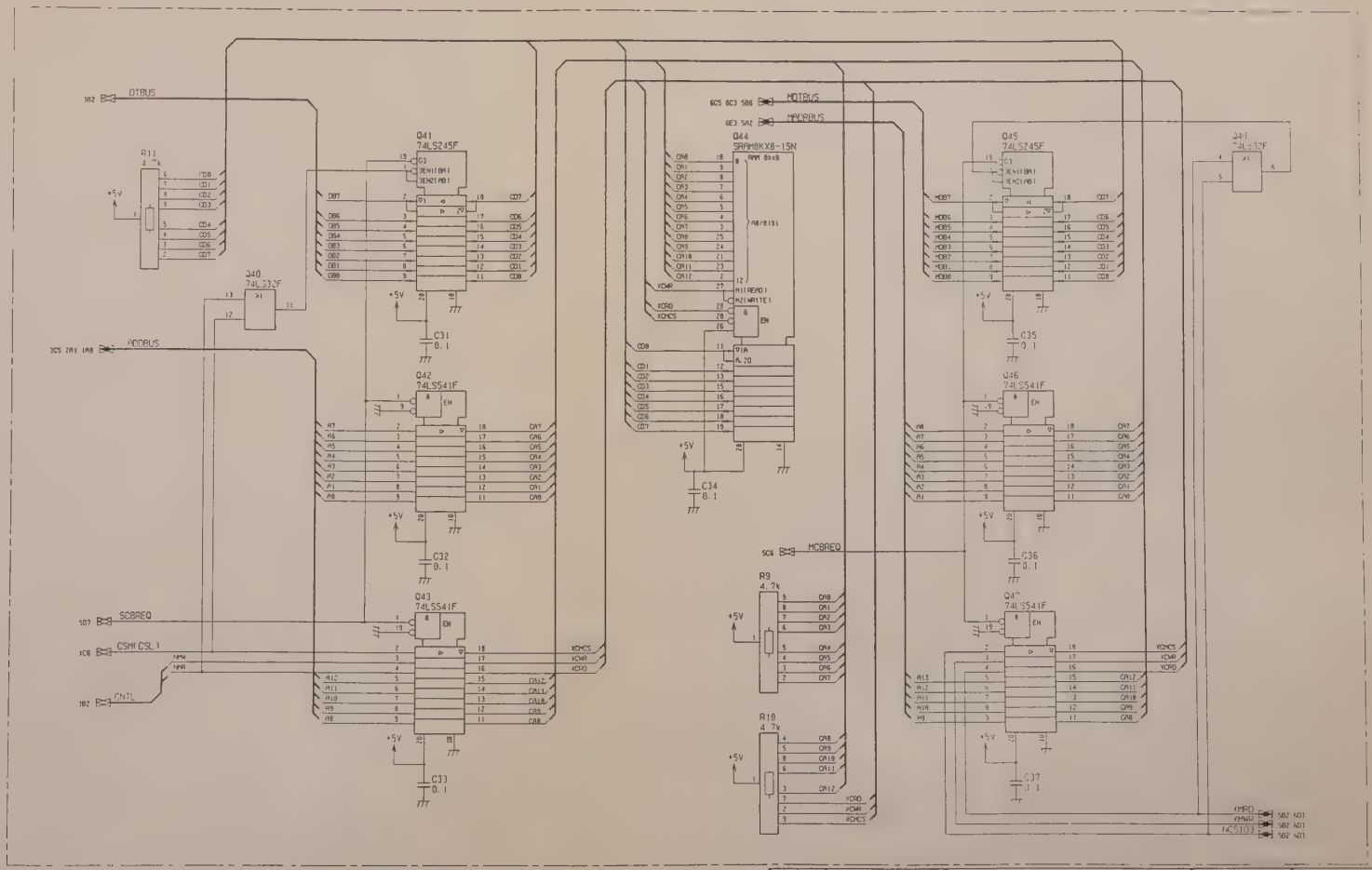

QTY	ITEM	PART No.	DESCRIPTION	MATERIAL	FINISH

28

CHECKED BY NAKAZAWA	DRAWN BY IWASAWA	SCALE :	
APPROVED BY TODA	DESIGNED BY NAKAMURA		

TITLE: A16 RS232C BOARD

DRAWING No. 43W39900 4/6

DEP

ANRITSU CORP.

APPLICATION

REVISIONS

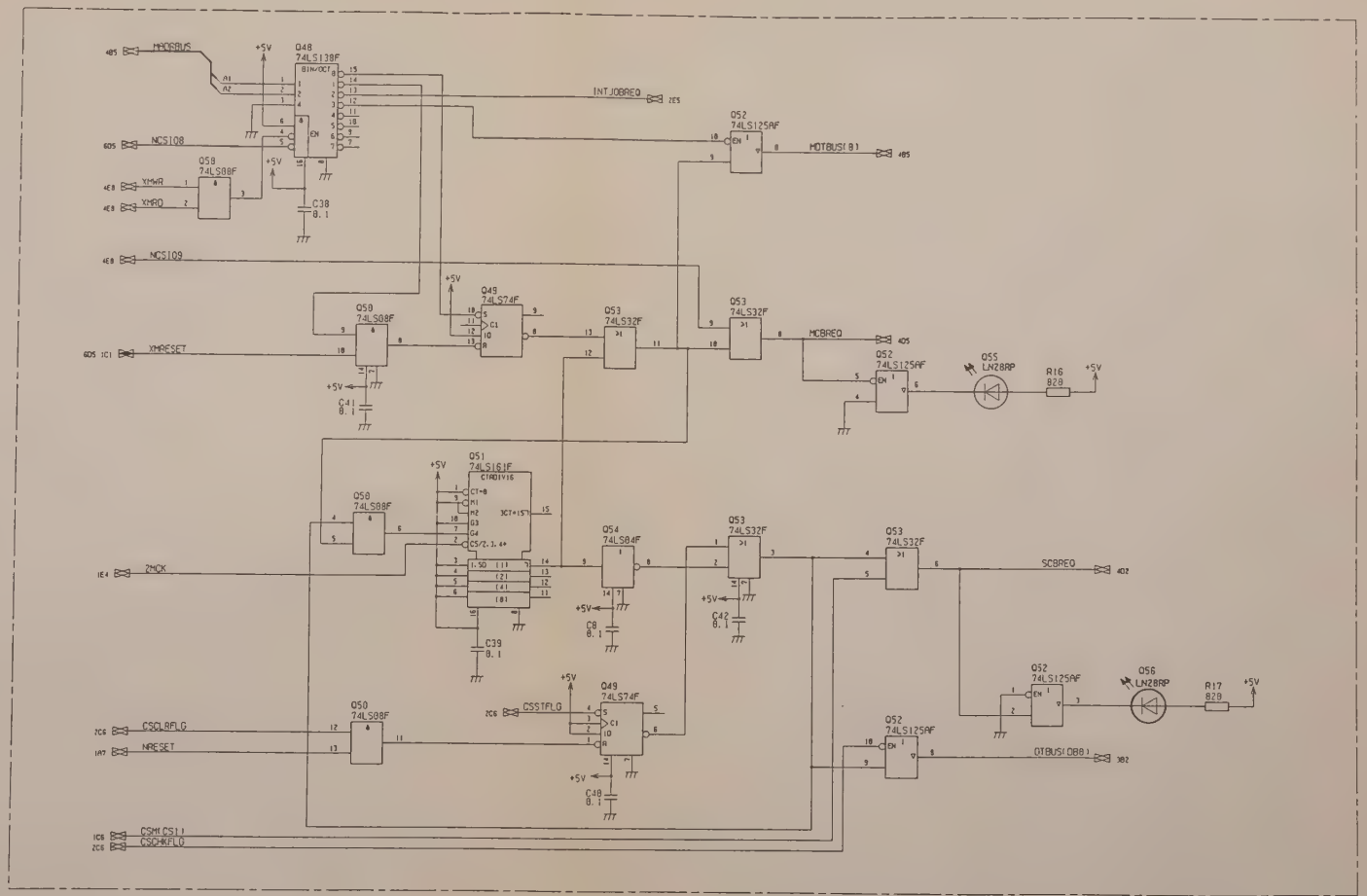

QTY	ITEM	PART No.	DESCRIPTION	MATERIAL	FINISH

28

CHECKED BY NAKAZAWA	DRAWN BY IWASAWA	SCALE :
APPROVED BY TODA	DESIGNED BY NAKAMURA	

TITLE: A16 RS232C BOARD

DRAWING No. 43W39900 5/6

DEP

ANRITSU CORP.

APPLICATION

REVISIONS

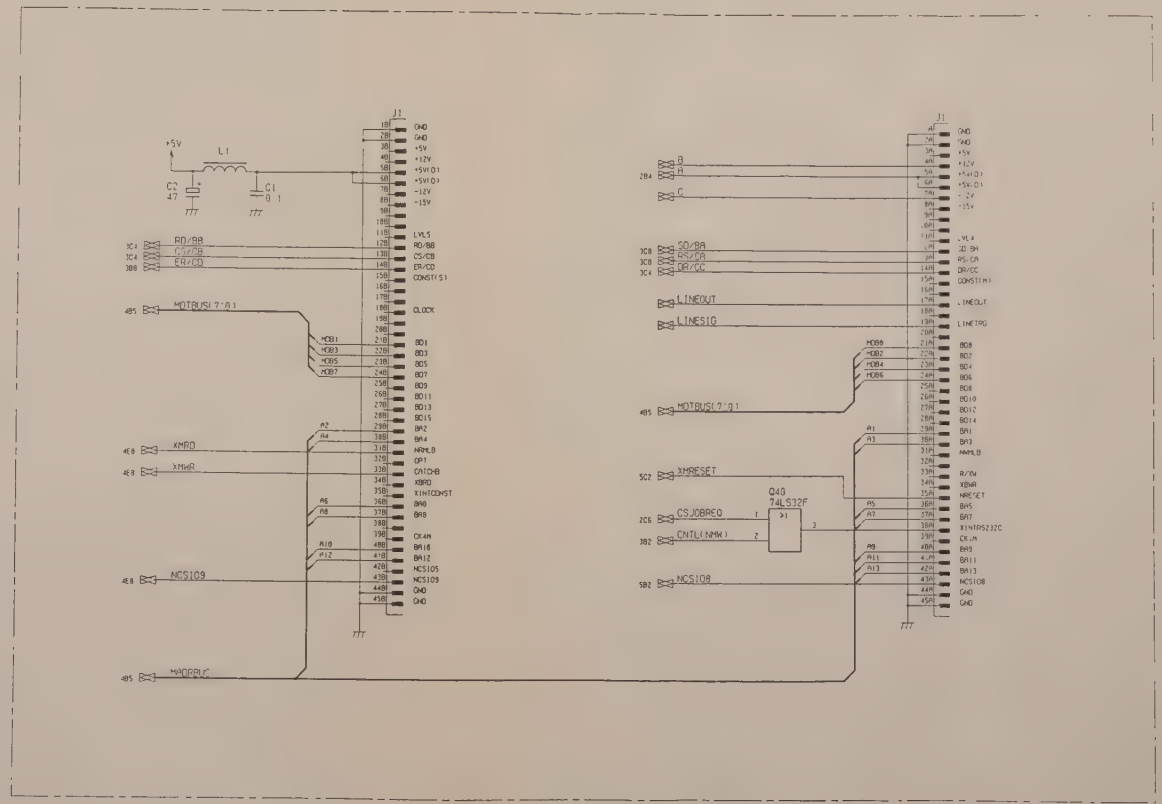

QTY	ITEM	PART No.	DESCRIPTION	MATERIAL	FINISH

CHECKED BY NAKAZAWA	DRAWN BY IWASAWA	SCALE :	28
APPROVED BY TODA	DESIGNED BY NAKAMURA		

TITLE: A16 RS232C BOARD

DRAWING No. 43W39900 6/6

DEP

ANRITSU CORP.

SECTION 4
CALIBRATION AND ADJUSTMENT

4.1 Introduction

This section describes how to adjust the ME4510B Transmitter and Receiver.

Adjust the ME4510B Transmitter and Receiver as required after repairing in accordance with Section 3 and after testing as described in the operation manual.

For a description of the service kit and the measuring equipment required for adjusting the ME4510B, refer to paragraphs 3.2 and 3.3.

4.2 Tranmitter

4.2.1 Output level —Far-End mode

Adjust the IF output level in the Far-End mode.

(1) Specification

Output level accuracy: Within ±0.3 dB (at 70/140 MHz, 0 dBm)

(2) Measuring equipment to be used for testing

Power meter

(3) Adjustment points

Transmitter A1 IF GENERATOR
R90: Minimum level adjustment point
R100: Maximum level adjustment point

(4) Setup:

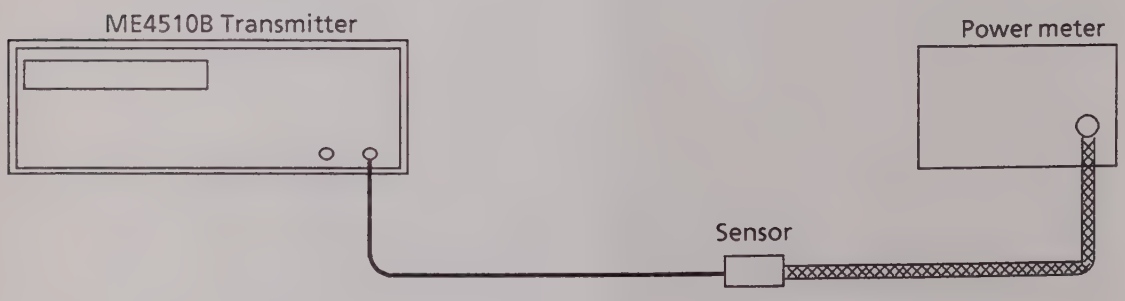

Fig. 4-1 Adjusting the Output Level

(5) Measurement

Step	Procedure	
1	Connect the ME4510B Transmitter output to the power meter sensor as shown in Fig. 4-1.	
	<Setting the ME4510B Transmitter>	
2	MODE	[FAR END]
3	CENTER FREQ	Set 70 MHz or 140 MHz.
4	SWEEP WIDTH	0 MHz
5	OUTPUT LEVEL	0 dBm
6	FM DEVIATION	0 kHz rms
7	IF OUTPUT ON/OFF	ON

Measure the output level with a power meter. If it does not meet the value given in paragraph 4.2.1 (1) "Specification", adjust it according to the following paragraph.

(6) Adjustment

Adjust the output level as follows:

Step	Procedure	
1	OUTPUT LEVEL	+6.1 dBm
2	Adjustment	Adjust A1-R90 so that the power meter reads +6.1 dBm.
3	OUTPUT LEVEL	+10 dBm
4	Adjustment	Adjust A1-R100 so that the power meter reads +10 dBm.
5	Verify that the output level meets the standard by repeating 1 to 4 and finally setting the OUTPUT LEVEL to 0 dBm.	

4.2.2 IM3 output level

Adjust the IF output level in the IM3 mode.

(1) Specification

Output level accuracy: Within ±1 dB (at 70/140 MHz, 0 dBm)

(2) Measuring equipment to be used for testing

Power meter

(3) Adjustment points

Transmitter A2 IM3 board

Oscillator	Minimum level adjuster	Maximum level adjuster
F1	R47	R49
F2	R97	R99
F3	R147	R149
F4	R207	R209

(4) Setup:

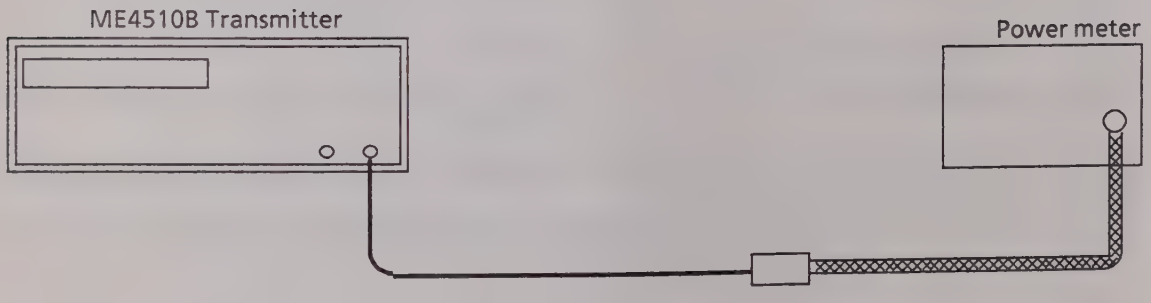

Fig. 4-2 Adjusting the IM3 Output Level

(5) Measurement

Step	Procedure	
1	Connect the ME4510B Transmitter output to the power meter sensor as shown in Fig. 4-2.	
	<Setting the ME4510B Transmitter>	
2	MODE	[IM3], [CW]
3	IM3–CW	[F1] (sequentially set and measure [F2] to [F4]).
4	CENTER FREQ.	Set
5	OUTPUT LEVEL	0 dBm
6	IF OUTPUT ON/OFF	ON

Measure the output level with a power meter. When it does not meet the value given in paragraph 4.2.2 (1) "Specification", adjust it according to the following paragraph (6) "Adjustment".

(6) Adjustment

Step	Procedure	
1	OUTPUT LEVEL	–3.9 dBm
2	Adjustment	Adjust the level at the minimum level adjustment point so that the power meter reads –3.9 dBm.
3	OUTPUT LEVEL	0 dBm
4	Adjustment	Adjust the level at the maximum level adjustment point so that the power meter reads 0 dBm.
5	Make sure that the output level meets the standard by repeating steps 1 to 4 and finally setting the OUTPUT LEVEL to 0 dBm.	
6	Repeat steps 1 to 5 for F1 to F4.	

4.3 Receiver

4.3.1 IF input level in Far-End mode

Adjust the indicated IF input level accuracy in the Far-End mode.

(1) Specification

- Input level indication accuracy: Within ±0.5 dB (at 70/140 MHz, 0 dBm)

(2) Measuring equipment to be used for testing

- Signal generator
- Power meter

(3) Adjustment points

Receiver A6-A2 A/D board

- Minimum level adjustment point: R67
- Maximum level adjustment point: R99

(4) Setup:

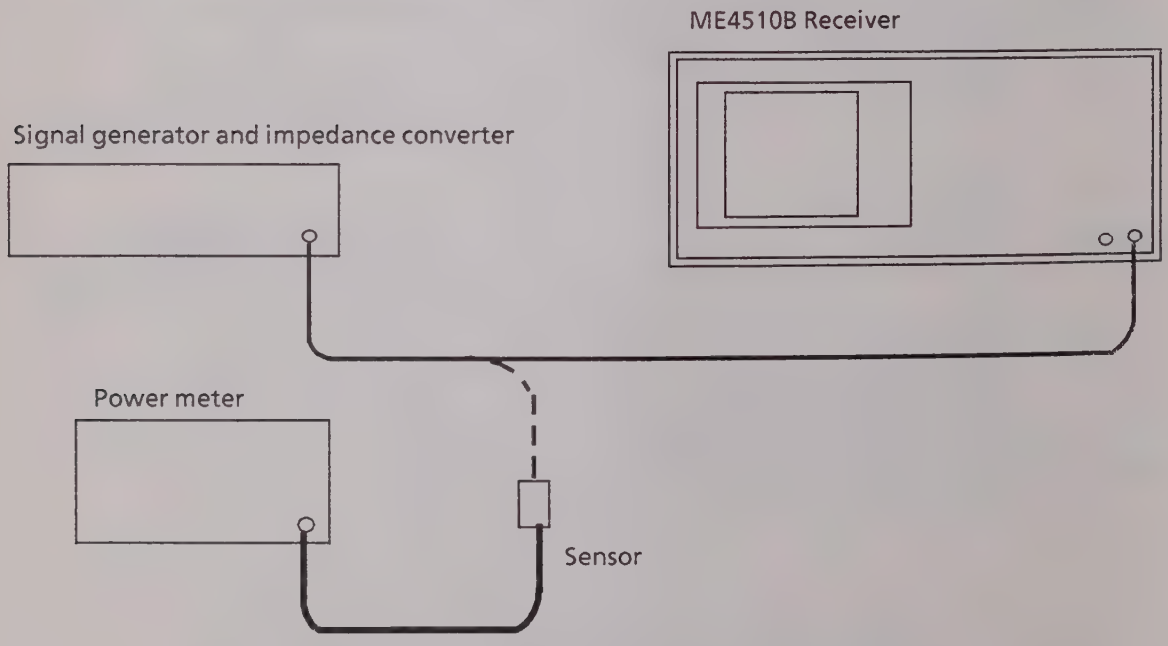

Fig. 4-3 Adjusting the IF Input Level in the Far-End Mode

(5) Measurement

Step	Procedure
1	Connect the signal generator output to the power meter input as shown in Fig. 4-3.
2	Set the signal generator output frequency and level. Frequency: Set 70 MHz or 140 MHz Level: 0 dBm
	<Setting the ME4510B Receiver>
3	MODE ..... [FAR-END]
4	PRESET ..... ON
5	PARAMETER – [IF BAND] ..... Select according to the input frequency.
6	PARAMETER – [INPUT RANGE] .. 0 dBm manual
	<Measurement>
7	Connect the signal generator output to the ME4510B Receiver input.
8	Read the input level indicated on the ME4510B Receiver.

When the indicated input level does not match the value given in paragraph 4.3.1 (1) "Specification", adjust it in accordance with the following paragraph (6).

(6) Adjustment

Step	Procedure	
1	SG output level	Set the SG output level to –9 dBm.
2	Adjustment	Adjust A6-A2 R67 so that the indicated input level of the Receiver is –9 dBm.
3	SG output level	Set the SG output level to 0 dBm.
4	Adjustment	Adjust A6-A2 R99 so that the indicated input level of the Receiver is 0 dBm.
5	Verify that the output level meets the standard by repeating steps 1 to 4 until the OUTPUT LEVEL setting is 0 dBm.	

4.3.2 Center marker in Far-End mode

Adjust the center marker accuracy in the Far-End mode.

(1) Specification

Center marker accuracy: Within ≦ ±500 kHz
(for ±1 MHz sweep width of input signal.)

(2) Measuring equipment to be used for testing

ME4510B Transmitter

(3) Adjustment points

Receiver A7 HORIZONTAL R72

(4) Setup:

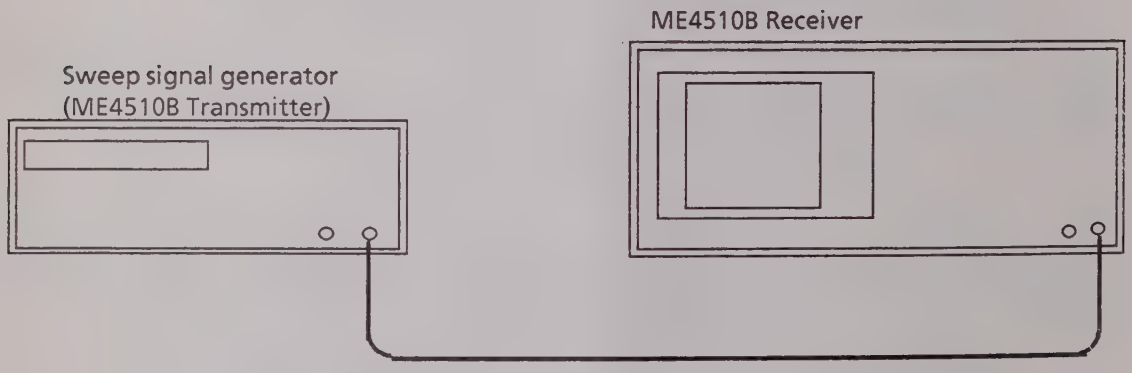

Fig. 4-4 Adjusting the Center-Marker Frequency Accuracy in the Far-End Mode

(5) Measurement

Step	Procedure
1	Connect the ME4510B Transmitter output to the ME4510B Receiver input as shown in Fig. 4-4.
	<Setting the ME4510B Transmitter>
2	MODE ..... [FAR-END]
3	PRESET ..... ON
4	CENTER FREQ ..... Set the 70 MHz.
5	SWEEP WIDTH ..... ±1 MHz
6	IF OUTPUT ON/OFF ..... ON
	<Setting the ME4510B Receiver>
7	MODE ..... [FAR-END]
8	PRESET ..... ON
9	PARAMETER – [IF BAND] .... Select according to the input frequency.
10	MARKER/ZONE –[CENTER] .. ON
	<Measurement>
11	Measure the frequency after adjusting the center marker position to the scale center.

When the frequency of the center marker does not match the value given in paragraph 4.3.2 (1) "Specification", adjust it according to the following paragraph (6).

(6) Adjustment

Step	Procedure
1	Adjust A7-R72 so that the CTF (indicated center frequency) of the Receiver is 70 MHz.
2	Afterwards, verify that the center marker frequency has been set to 70 MHz.

4.3.3 Side marker in Far-End mode

Adjust the side marker frequency accuracy in the Far-End mode.

(1) Specification

- Frequency accuracy: Within ± (5% of sweep width + 100 kHz)

(2) Measuring equipment to be used for testing

- ME4510B Transmitter
- Signal generator

(3) Adjustment points

- Receiver A7 HORIZONTAL R128, R131, R132

(4) Setup:

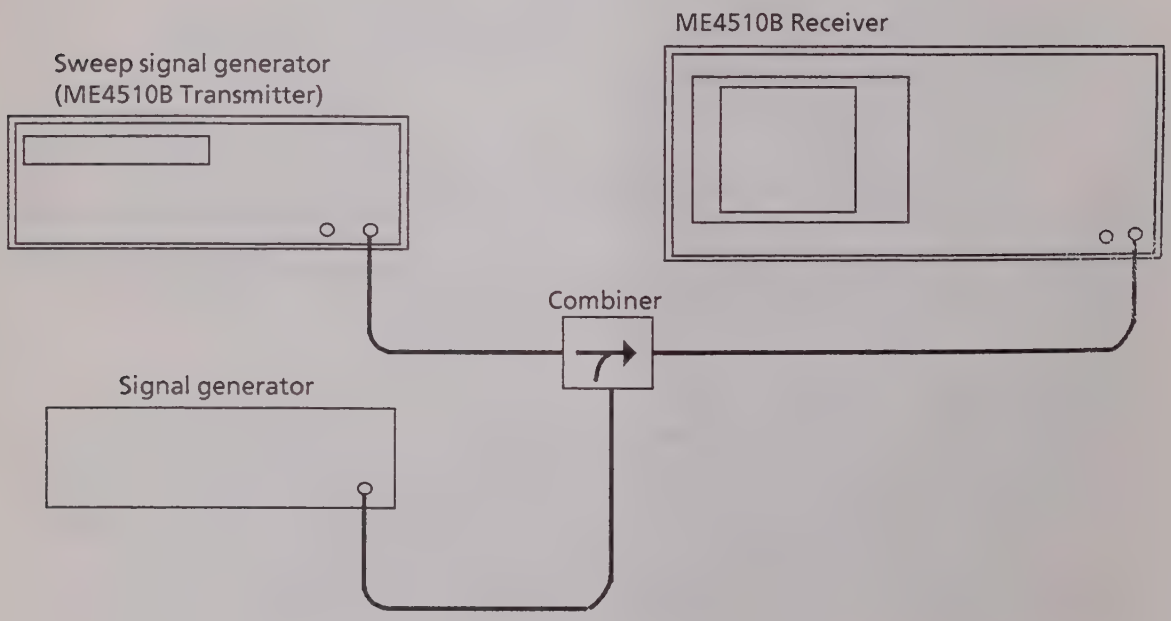

Fig. 4-5 Adjusting the Side-Marker Frequency Accuracy in the Far-End Mode

Step	Procedure	
1	Connect the ME4510B Transmitter and signal generator outputs to the ME4510B Receiver input after combining them with a combiner as shown in Fig. 4-5.	
	<Setting the ME4510B Transmitter>	
2	MODE	[FAR-END]
3	PRESET	ON
4	CENTER FREQ	Set the center frequency as in Note ① below.
5	SWEEP WIDTH	Set the sweep width as in Note ①.
6	FM DEVIATION	0 kHz rms
7	IF OUTPUT ON/OFF	ON
	<Setting the ME4510B Receiver>	
8	MODE	[FAR-END]
9	PRESET	ON
10	PARAMETER	
	[IF BAND]	Select according to the input frequency.
	[SCALE]	0.5 dB/div
11	MARKER	[SIDE] Adjust the side marker position to both ends of the scale.
	<Measurement>	
12	After adjusting the signal-generator output frequency to the frequency in Note ①, set the signal-generator output level so that the zero-beat signal level on the AMPL-measured image is appropriate.	
13	Measure the true sweep width of the input signal as follows: Set the center zero-beat signal to both ends of AMPL-measured image to measure the frequencies at both the ends, then obtain the sweep width from the difference between the both-end frequencies. Adjust the sweep width in Note ① so that the measured sweep width matches the set sweep width.	

(Continued)

Step	Procedure
14	Read th side marker frequency from the CRT screen.

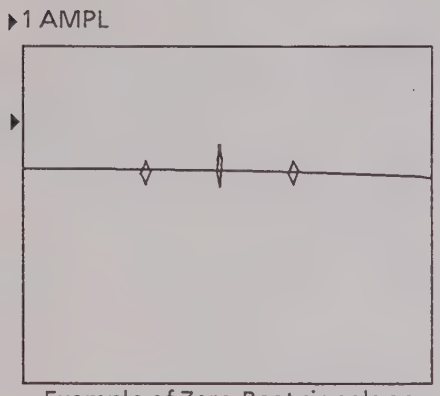

Example of Zero-Beat signals on AMPL-Measured Image

Note: Three zero-beat signals appear on the screen. The center zero-beat signal position indicates the signal-generator frequency.

Note ①: Measurement conditions

Frequency band	Sweep width	Adjustment point
70 MHz band	±5 MHz	A7-R132
	±25 MHz	A7-R127
140 MHz band	±5 MHz	A7-R131
	±60 MHz	A7-R127

When the accuracy of the side marker frequency does not comply with the value given in paragraph 4.3.3 (1) "Specification", adjust it as follows (6).

(6) Adjustment

Step	Procedure
1	Set the Transmitter frequency to 140 ±5 MHz.
2	Ajdust A7-R131 so that the SPN (indicated sweep width) of the Receiver is ±5 MHz.
3	Set the Transmitter frequency to 140 ±40 MHz.
4	Adjust A7-R127 so that the SPN (indicated sweep width) of the Receiver is ±40 MHz.
5	Make sure that the side marker accuracy meets the standard at 140 MHz by repeating steps 1 to 4.
6	Set the Transmitter frequency to 70 ±5 MHz.
7	Adjust A7-R132 so that the SPN (indicated sweep width) of the Receiver is ±5 MHz.
8	Verify that the side marker accuracy meets the standard at 70 MHz.

4.3.4 Span width in spectrum mode

Adjust the span width in the spectrum mode.

(1) Specification

Span indication accuracy: Within ±5%
(for 5 to 30 MHz/div.)
Within ±5%
(for 10 kHz to 4.9 MHz/div.)

(2) Measuring equipment to be used for testing

Signal generator

(3) Adjustment points

Receiver

① A7 (HORIZONTAL) R21: Span 210 kHz to 30 MHz/div.

② A1 (LOCAL) - A8 R26: Span 10 to 200 kHz/div.

(4) Setup:

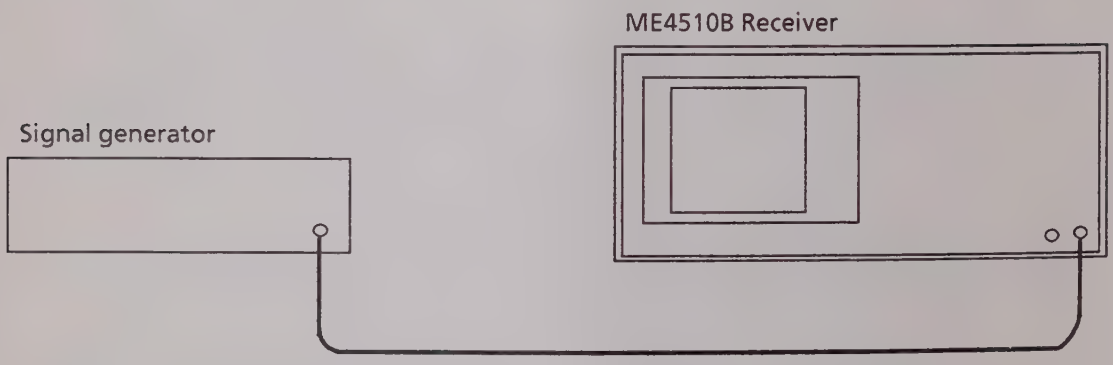

Fig. 4-6 Adjusting the Indicated Span Accuracy in the Spectrum Mode

(5) Measurement

Step	Procedure	
1	Connect the signal-generator output to the ME4510B Receiver input as shown in Fig. 4-6.	
	<Setting the ME4510B Receiver>	
2	MODE	[SPECTRUM]
3	PRESET	ON
4	PARAMETER	
	[CENTER FREQ]	150 MHz
	[SPAN]	Set the span 100 kHz/or 10 MHz/div.
	<Measurement>	
5	Measure the span width as follows:	
	By varing the signal-generator frequency, obtain the span width from the difference between signal-generator frequencies in which the corresponding spectrum waveforms appear at the left and the right ends of the scale.	

When the span width does not comply with the value given in paragraph 4.3.4 (1) "Specification", adjust it as follows (6).

(6) Adjustment

Step	Procedure
1	Set the frequency span of the Receiver to 10 MHz/div. (CTF: 150 MHz).
2	Measure the frequency span of the Receiver with a signal generator, and adjust A7-R21 so that the frequency span is 10 MHz/div.
3	Set the frequency span of the Receiver to 100 kHz/div. (CTF: 150 MHz).
4	Measure the frequency span of the Receiver with a signal generator, and adjust A1-A8-R26 so that the frequency span is 100 kHz/div.

SECTION 5
REPLACEMENT PARTS

5.1 Introduction

This section contains information for ordering replacement parts or components. The following is a list of abbreviations for circuit components (hereafter referred to by Ref. No.) and abbreviations used for items in the Parts List.

(1) Abbreviations for circuit components

A	Assembly	J	Jack, plug, connector	P	Lamp	T	Transformer
AT	Attenuator	K	Relay	Q	Transistor, diode, IC, rectifier	V	Neon lamp, vacuum tube
C	Capacitor	L	Coil, microinductor	R	Resistor	X	Crystal OSC
F	Fuse	M	Meter, timer	S	Switch	Z	Unit

(2) Abbreviations

AC	alternating current	LCD	liquid crystal display
A/D	analog-to-digital	LED	light-emitting diode
ADJ	adjuster	LF	low frequency
AL	aluminum	LPF	low-pass filter
BEF	band-elimination filter	LSI	large scale integrated circuit
BIDIR	bidirectional	MDL	module
BPF	band-pass filter	NI-CD	Nickel Cadmium
CAP	capacitor	OPNL	operational
CER	ceramic	OSC	oscillator
CMOS	complementary metal oxide semiconductor	PDIO	photo-diode
CONST	constant	PROM	programmable read only memory
D/A	digital-to-analog	PSU	power supply unit
DC	direct current	PUJT	programmable unijunction transistor
DIP	dual in-line package	RAM	random access memory
DIR	directional	REAC	reactance
DRAM	dynamic random access memory	RECT	rectangular
EEPROM	electrically erasable programmable read only memory	RES	resistor
ELECTLT	electrolytic	RF	radio frequency
EPROM	erasable programmable read only memory	SRAM	static random access memory
FET	field-effect transistor	TA	tantalum
F/V	frequency-to-voltage	VAR	variable
GEN	generator	VARICAP	variable capacitor
HPF	high-pass filter	VCO	voltage controlled oscillator
IC	integrated circuit	YIG	Yttrium Iron Garnet
IF	intermediate frequency		

5.2 Reading Capacitance and Resistance

(1) Reading resistance

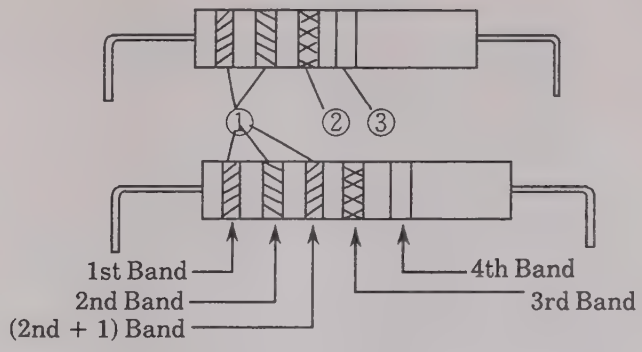

	①		②	③
COLOR	Figure		Multiplier	Tolerance
	1st	2nd	3rd	4th
Black	0	0	$\times 10^0$	-
Brown	1	1	$\times 10^1$	-
Red	2	2	$\times 10^2$	-
Orange	3	3	$\times 10^3$	-
Yellow	4	4	$\times 10^4$	-
Green	5	5	$\times 10^5$	$\pm 0.5\%$
Blue	6	6	$\times 10^6$	-
Purple	7	7	$\times 10^7$	-
Gray	8	8	$\times 10^8$	-
White	9	9	$\times 10^0$	-
Gold	-	-	$\times 10^{-1}$	$\pm 5\%$
Silver	-	-	$\times 10^{-2}$	$\pm 10\%$
------	-	-		$\pm 20\%$

For Example:

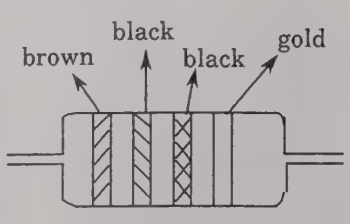

$10 \times 10^0 \pm 5\%$
$10\ \Omega, \pm 5\%$

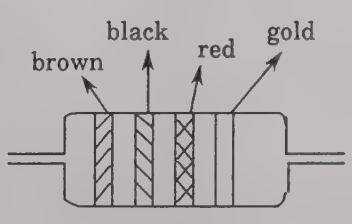

$10 \times 10^2 \pm 5\%$
$1\ k\Omega, \pm 5\%$

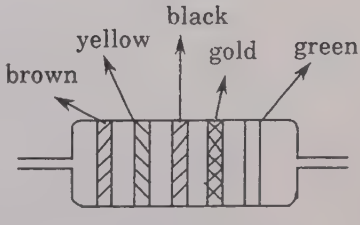

$140 \times 10^{-1} \pm 0.5\%$
$14.0\ k\Omega, \pm 5\%$

(2) Reading chip resistance

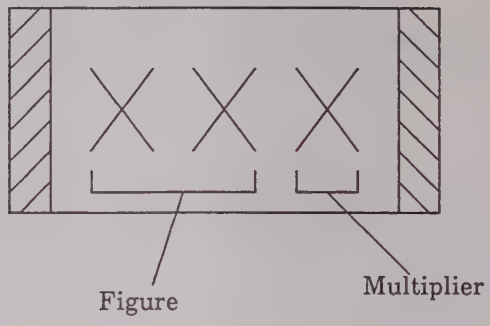

The first two digits represent decimal values while the last numeric character indicates the number of zeros following these two characters.

A decimal point is represented by the character R. When the R representation is used, all numeric characters represent significant digits.

For Example:

100 Ω

10 kΩ

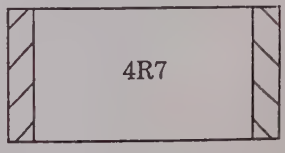

4.7 Ω

(3) Reading capacitance

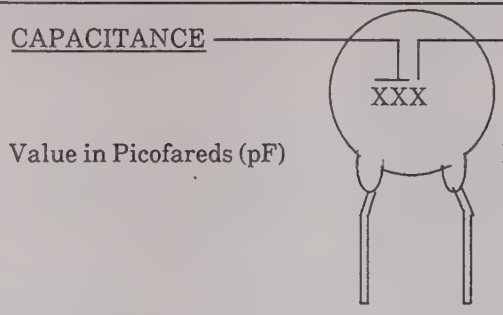

EXAMPLES: 103 = 10,000 pF = 10^{-8} F or 0.01 μF
302 = 3,000 pF = 3×10^{-9} F or 0.03 μF
676 = 67,000,000 pF = 67×10^{-6} F or 67 μF

(a) Ceramic and polyester capacitors

Indication	0.5	1	10	101	102	103	104
Indication	0.5 pF	1 pF	10 pF	100 pF	1000 pF	0.01 μF	0.1 μF

Example:

Ceramic Capacitor

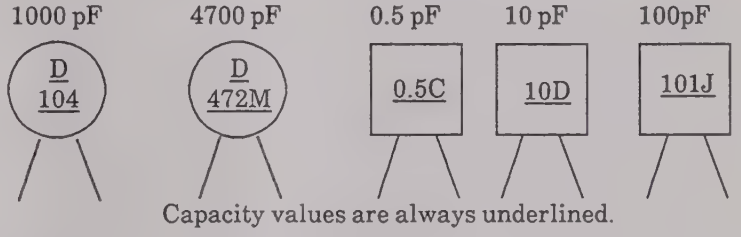

Capacity values are always underlined.

Polyester Capacitor

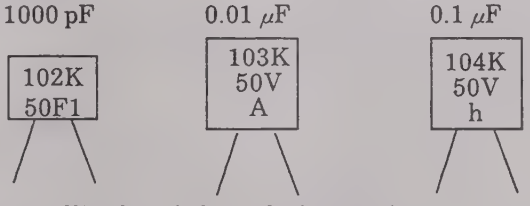

(b) Tantalum, metallized, and electrolytic capacitors

Indication	OR47	010	100	101
Indication	0.47 μF	1 μF	10 μF	100 μF

(c) Chip tantalum capacitance

Indication	0.47	4.7	47
Indication	0.47 μF	4.7 μF	47 μF

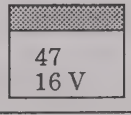

\+ 47 μF 16 V

(4) Reading chip ceramic capacitance

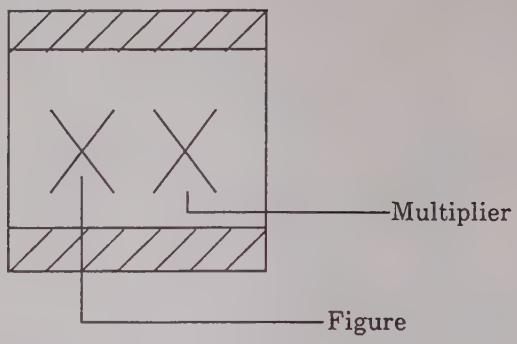

Figure						Multiplier	
Indicated alphabetic character	Corresponding value	Indicated alphabetic character	Corresponding value	Indicated alphabetic character	Corresponding value	Indicated value	Corresponding multiplier
A	1.0	M	3.0	Y	8.2	0	10^0
B	1.1	N	3.3	Z	9.1	1	10^1
C	1.2	P	3.6	a	2.5	2	10^2
D	1.3	Q	3.9	b	3.5	3	10^3
E	1.5	R	4.3	d	4.0	4	10^4
F	1.6	S	4.7	e	4.5	5	10^5
G	1.8	T	5.1	f	5.0	6	10^7
H	2.0	U	5.6	m	6.0	7	10^7
J	2.2	V	6.2	n	7.0	8	10^8
K	2.4	W	6.8	t	8.0	9	10^{-1}
L	2.7	X	7.5	y	9.0		

Examples:

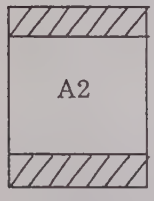

100 pF

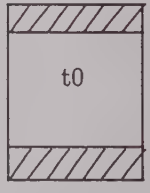

8 pF

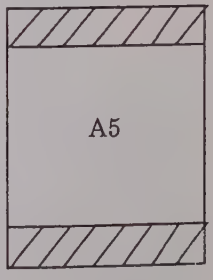

0.1 μF

5.3 Electrical Parts Ordering Procedure

When ordering parts, please refer to the parts list and give the following description.

Item	Example
(1) Name of Instrument	DIGITAL MICROWAVE SYSTEM ANALYZER ME4510B
(2) Name of Parts List	Parts List: A1 IF GENERATOR
(3) Ref. No.	R210
(4) Parts Code (or part name)	RRS-8-220JA ***Note:*** Part name is given in the Parts List Description column. When ordering apart or parts with an asterisk, the exact specifications are required.
(5) Quantity	1
(6) Serial No. of Instrument	M31257

5.4 Parts List

Refer to Table 3-4 Circuit Reference

Parts List of: ME45108
OMSA
ME45108 TRANSMITTER OVERALL 1

Ref. No.	Part Code	Description	Rating	Qty	Note
A 1		A1 IF GENERATOR PC BOARD 422U13568		1	44W86733
A 2		A2 IM3 OSC PC BOARD 422U13570		1	44W86734
A 3		A3 CPU PC BOARD 422U13572		1	44W86735
A 4		A4 FRONT PC BOARD 422U13574		1	44W86736
A 5		A5 POWER SUPPLY PC BOARD 432U35469		1	44W86737
A 6		A6 GP-IB CONNECTOR PC BOARD 432U35471		1	44W86738
A 7		A7 RS-232C PC BOARD 422U15340		1	44W95079 (OPTION)
F 1		FUSE T2A250V	2A.250V	1	
F 2		FUSE T2A250V	2A.250V	1	
G 1		FAN FBK-06A12H		1	
J 1		INLET NC-165		1	
J 2		TERMINAL 44E87532		1	
J 3		CABLE 27DP-P-9NC-PJ-1.5V		1	44J95920H
J 4		NOT ASSIGNED			
J 5		CABLE 27DP-P-8NC-PJ-1.5V		1	44J95920D
J 6		NOT ASSIGNED			
J 7		PLUG BNC-R-NI		1	
J 8		DF1-2S2.5R24-30		1	
J 9		NOT ASSIGNED			

Dep.

* Selected at factory | DRAWING No. 44W86732 | 1/3

No.0073-1988.11

ANRITSU CORP.

Parts List of: ME45108
OMSA
ME45108 TRANSMITTER OVERALL

Ref. No.	Part Code	Description	Rating	Qty	Note
J 10		TERMINAL BLOCK 500/1231D8-8		1	
J 11		NOT ASSIGNED			
J 12		NOT ASSIGNED			
J 13		NOT ASSIGNED			
J 14		TERMINAL BLOCK 500/1231D8-2		1	
J 15		NOT ASSIGNED			
J 16		NOT ASSIGNED			
J 17		NOT ASSIGNED			
J 18		NOT ASSIGNED			
J 19		CABLE DF1-15S2.5R24-30		1	
J 20	8104-04284	JACK DF1-2S2.5R28		1	
J 21		NOT ASSIGNED			
J 22		CABLE DF1-8S2.5R24-2S		1	(OPTION)
J 23		PLUG MD88-2SS		1	(OPTION)
R 1	4171-J0105	CARBON FILM RES ARD25T105J	1MΩ ± 5%.1/4W	1	
S 1		PUSH BUTTON SWITCH ES8-99582V		1	
S 2		SLIDE SWITCH ESD-3994S		1	
S 3		SLIDE SWITCH ESD-3994S		1	
T 1		TRANSFORMER 34T08228		1	

Dep.

* Selected at factory | DRAWING No. 44W86732 | 2/3

No.0073-1988.11

ANRITSU CORP.

Parts List of: ME45108
OMSA
ME45108 TRANSMITTER OVERALL

Ref. No.	Part Code	Description	Rating	Qty	Note
J 1		CABLE 27CP		1	44J85289B
J 2		CABLE 27DP-LP-LP		1	34J90715K
J 3		CABLE 44J95391		1	44J95391B
J 6		CABLE DF1-15S2.5R24-20		1	
Z 1		LINE FILTER ZM82203-13		1	

Dep.

* Selected at factory | DRAWING No. 44W86732 | 3/3

No.0073-1988.11

ANRITSU CORP.

Parts List of: A1 IF GENERATOR 2

Ref. No.	Part Code	Description	Rating	Qty	Note
C 1		CER CAP CK73381H104K	0.1μF ± 10%.50V	1	
C 2		CER CAP CK73381H104K	0.1μF ± 10%.50V	1	
C 3		CER CAP CK73381H104K	0.1μF ± 10%.50V	1	
C 4		CER CAP CK73381H104K	0.1μF ± 10%.50V	1	
C 5		CER CAP CK73381H104K	0.1μF ± 10%.50V	1	
C 6	2674-M2685	TA ELECTLT CAP CS732E0J685M	6.8μF ± 20%.6.3V	1	
C 7		CER CAP CK73381H104K	0.1μF ± 10%.50V	1	
C 8	2387-10268	CER CAP CK737F1H105Z (A.6	1μF.50V +80/-20%	1	
C 9		NOT ASSIGNED			
C 10		NOT ASSIGNED			
C 11		NOT ASSIGNED			
C 12		CER CAP CK73381H104K	0.1μF ± 10%.50V	1	
C 13		CER CAP CK73381H104K	0.1μF ± 10%.50V	1	
C 14		CER CAP CK73381H104K	0.1μF ± 10%.50V	1	
C 15		NOT ASSIGNED			
C 16		NOT ASSIGNED			
C 17		NOT ASSIGNED			
C 18		CER CAP CK73381H104K	0.1μF ± 10%.50V	1	
C 19	2679-M210S	TA ELECTLT CAP CS732E1V105M	1μF ± 20%.35V	1	
C 20		CER CAP CK73381H104K	0.1μF ± 10%.50V	1	
C 21		CER CAP CK73381H104K	0.1μF ± 10%.50V	1	
C 22		NOT ASSIGNED			
C 23		NOT ASSIGNED			

Dep.

* Selected at factory | DRAWING No. 44W86733 | 1/30

No.0073-1988.11

ANRITSU CORP.

Ref. No.	Part Code	Description	Rating	Qty	Note
C 24		NOT ASSIGN			
C 25		CER CAP CK733B1H104K	0.1μ F ± 10%.50V	1	
C 26		TA ELECTLT CAP CS732E1V105M	1μ F ± 20%.35V	1	
C 27		CER CAP CK733B1H104K	0.1μ F ± 10%.50V	1	
C 28		CER CAP CK733B1H104K	0.1μ F ± 10%.50V	1	
C 29		CER CAP CK733B1H104K	0.1μ F ± 10%.50V	1	
C 30		TA ELECTLT CAP CS732E1V105M	1μ F ± 20%.35V	1	
C 31		CER CAP CK733B1H104K	0.1μ F ± 10%.50V	1	
C 32		TA ELECTLT CAP CS732E1V105M	1μ F ± 20%.35V	1	
C 33		CER CAP CK733B1H104K	0.1μ F ± 10%.50V	1	
C 34		CER CAP CK733B1H104K	0.1μ F ± 10%.50V	1	
C 35		CER CAP CK733B1H104K	0.1μ F ± 10%.50V	1	
C 36		CER CAP CK733B1H104K	0.1μ F ± 10%.50V	1	
C 37		TA ELECTLT CAP CS732E1V105M	1μ F ± 20%.35V	1	
C 38		NOT ASSIGN			
C 39		NOT ASSIGN			
C 40		NOT ASSIGN			
C 41		NOT ASSIGN			
C 42		CER CAP CK733B1H104K	0.1μ F ± 10%.50V	1	
C 43		CER CAP CC732CH1H060D	6p F.50V ± 0.5p F	1	
C 44		CER CAP CC732CJ1H030C	3p F.50V ± 0.25p F	1	
C 45		CER CAP CK732B1H102K	1000p F ± 10%.50V	1	
C 46		CER CAP CK732B1H102K	1000p F ± 10%.50V	1	

* Selected at factory　Drawing No. 44W86733 -11　2/36

ANRITSU CORP.

Ref. No.	Part Code	Description	Rating	Qty	Note
C 47		CER CAP CK732B1H102K	1000p F ± 10%.50V	1	
C 48		CER CAP CK733B1H104K	0.1μ F ± 10%.50V	1	
C 49		CER CAP CK732B1H102K	1000p F ± 10%.50V	1	
C 50		CER CAP CK732B1H102K	1000p F ± 10%.50V	1	
C 51		TA ELECTLT CAP CS732E0J685M	6.8μ F ± 20%.6.3V	1	
C 52		CER CAP CK732B1H102K	1000p F ± 10%.50V	1	
C 53		CER CAP CK732B1H103K	0.01μ F ± 10%.50V	1	
C 54		CER CAP CK733B1H104K	0.1μ F ± 10%.50V	1	
C 55		CER CAP CK733B1H104K	0.1μ F ± 10%.50V	1	
C 56		CER CAP CC732CH1H101J	100p F ± 5%.50V	1	
C 57		CER CAP CK733B1H104K	0.1μ F ± 10%.50V	1	
C 58		CER CAP CK733B1H104K	0.1μ F ± 10%.50V	1	
C 59		CER CAP CK732B1H102K	1000p F ± 10%.50V	1	
C 60		CER CAP CC732CH1H270J	27p F ± 5%.50V	1	
C 61		TA ELECTLT CAP CS734E1C226M	22μ F ± 20%.16V	1	
C 62		CER CAP CK733B1H104K	0.1μ F ± 10%.50V	1	
C 63		CER CAP CK733B1H104K	0.1μ F ± 10%.50V	1	
C 64		CER CAP CK732B1H103K	0.01μ F ± 10%.50V	1	
C 65		CER CAP CC732CH1H060D	6p F.50V ± 0.5p F	1	
C 66		CER CAP CK732B1H102K	1000p F ± 10%.50V	1	
C 67		CER CAP CC732CH1H270J	27p F ± 5%.50V	1	
C 68		NOT ASSIGN			
C 69		NOT ASSIGN			

* Selected at factory　Drawing No. 44W86733 -11　3/36

ANRITSU CORP.

Ref. No.	Part Code	Description	Rating	Qty	Note
C 70		NOT ASSIGN			
C 71		CER CAP CK732B1H102K	1000p F ± 10%.50V	1	
C 72		CER CAP CK732B1H102K	1000p F ± 10%.50V	1	
C 73		CER CAP CC732CH1H060D	6p F.50V ± 0.5p F	1	
C 74		CER CAP CC732CH1H100D	10p F ± 0.5%.50V	1	
C 75		CER CAP CC732CH1H150J	15p F ± 5%.50V	1	
C 76		CER CAP CC732CH1H050D	5p F.50V ± 0.5p F	1	
C 77		NOT ASSIGN			
C 78		CER CAP CC732CH1H090D	9p F.50V ± 0.5p F	1	
C 79		CER CAP CC732CK1H0R5C	0.5p F.50V ± 0.25p F	1	
C 80		NOT ASSIGN			
C 81		CER CAP CC732CH1H100D	10p F.50V ± 0.5p F	1	
C 82		NOT ASSIGN			
C 83		NOT ASSIGN			
C 84		NOT ASSIGN			
C 85		NOT ASSIGN			
C 86		NOT ASSIGN			
C 87		NOT ASSIGN			
C 88		NOT ASSIGN			
C 89		CER CAP CK732B1H472K	4700p F ± 10%.50V	1	
C 90		CER CAP CK732B1H102K	1000p F ± 10%.50V	1	
C 91		CER CAP CK732B1H102K	1000p F ± 10%.50V	1	
C 92		CER CAP CK732B1H472K	4700p F ± 10%.50V	1	

* Selected at factory　Drawing No. 44W86733 -11　4/36

ANRITSU CORP.

Ref. No.	Part Code	Description	Rating	Qty	Note
C 93		CER CAP CK732B1H102K	1000p F ± 10%.50V	1	
C 94		CER CAP CK733B1H104K	0.1μ F ± 10%.50V	1	
C 95		CER CAP CK733B1H104K	0.1μ F ± 10%.50V	1	
C 96		CER CAP CK733B1H104K	0.1μ F ± 10%.50V	1	
C 97		CER CAP CC732CH1H221J	220p F ± 5%.50V	1	
C 98		NOT ASSIGN			
C 99		NOT ASSIGN			
C 100		NOT ASSIGN			
C 101		CER CAP CK732B1H102K	1000p F ± 10%.50V	1	
C 102		CER CAP CK733B1H104K	0.1μ F ± 10%.50V	1	
C 103		CER CAP CK732B1H102K	1000p F ± 10%.50V	1	
C 104		CER CAP CK733B1H104K	0.1μ F ± 10%.50V	1	
C 105		CER CAP CK732B1H102K	1000p F ± 10%.50V	1	
C 106		NOT ASSIGN			
C 107		NOT ASSIGN			
C 108		NOT ASSIGN			
C 109		CER CAP CK732B1H102K	1000p F ± 10%.50V	1	
C 110		CER CAP CK732B1H102K	1000p F ± 10%.50V	1	
C 111		CER CAP CC732CK1H020C	2p F.50V ± 0.25p F	1	
C 112		CER CAP CC732CH1H120J	12p F ± 5%.50V	1	
C 113		CER CAP CC732CH1H120J	12p F ± 5%.50V	1	
C 114		CER CAP CC732CH1H100D	10p F ± 0.5%.50V	1	
C 115		CER CAP CK732B1H102K	1000p F ± 10%.50V	1	

* Selected at factory　Drawing No. 44W86733 -11　5/36

ANRITSU CORP.

Ref. No.	Part Code	Description	Rating	Qty	Note
C 116		CER CAP	1000p F		
		CK732B1H102K	± 10%.50V	1	
C 117		CER CAP	8p F.50V		
		CC732CH1H060D	± 0.5p F	1	
C 118		CER CAP	1000p F		
		CK732B1H102K	± 10%.50V	1	
C 119		CER CAP	7p F.50V		
		CC732CH1H070D	± 0.5p F	1	
C 120		CER CAP	330p F		
		CC732CH1H331J	± 5%.50V	1	
C 121		CER CAP	0.01μ F		
		CK732B1H103K	± 10%.50V	1	
C 122		CER CAP	0.1μ F		
		CK733B1H104K	± 10%.50V	1	
C 123		CER CAP			
		CC45UJ1H680JY		1	
C 124		CER CAP			
		CC45UJ1H820JY		1	
C 125		CER CAP	0.1μ F		
		CK733B1H104K	± 10%.50V	1	
C 126		CER CAP	0.1μ F		
		CK733B1H104K	± 10%.50V	1	
C 127		CER CAP	0.1μ F		
		CK733B1H104K	± 10%.50V	1	
C 128		CER CAP	0.1μ F		
		CK733B1H104K	± 10%.50V	1	
C 129		CER CAP	0.1μ F		
		CK733B1H104K	± 10%.50V	1	
C 130		CER CAP	0.1μ F		
		CK733B1H104K	± 10%.50V	1	
C 131		CER CAP	0.1μ F		
		CK733B1H104K	± 10%.50V	1	
C 132		CER CAP	0.1μ F		
		CK733B1H104K	± 10%.50V	1	
C 133		CER CAP	0.1μ F		
		CK733B1H104K	± 10%.50V	1	
C 134		CER CAP	0.1μ F		
		CK733B1H104K	± 10%.50V	1	
C 135		CER CAP	0.1μ F		
		CK733B1H104K	± 10%.50V	1	
C 136		CER CAP	0.1μ F		
		CK733B1H104K	± 10%.50V	1	
C 137		CER CAP	0.1μ F		
		CK733B1H104K	± 10%.50V	1	
C 138		NOT ASSIGN			

※ : Selected at factory

DRAWING No. 44MR6733 -11 6/36

© TEC 1993.07

ANRITSU CORP.

Ref. No.	Part Code	Description	Rating	Qty	Note
C 139		AL ELECTLT CAP	22μ F		
		CE04C1H220A	± 20%.50V	1	
C 140		NOT ASSIGN			
C 141		NOT ASSIGN			
C 142		NOT ASSIGN			
C 143		CER CAP	0.1μ F		
		CK733B1H104K	± 10%.50V	1	
C 144		CER CAP	0.1μ F		
		CK733B1H104K	± 10%.50V	1	
C 145		CER CAP	0.01μ F		
		CK732B1H103K	± 10%.50V	1	
C 146		CER CAP	0.01μ F		
		CK732B1H103K	± 10%.50V	1	
C 147		PLSTC FILM CAP	1000p F		
		ECQ-P1102FZ	± 1%.100V	1	
C 148		NOT ASSIGN			
C 149		CER CAP	0.1μ F		
		CK733B1H104K	± 10%.50V	1	
C 150		CER CAP	0.1μ F		
		CK733B1H104K	± 10%.50V	1	
C 151		CER CAP	680p F		
		CC732CH1H681J	± 5%.50V	1	
C 152		CER CAP	680p F		
		CC732CH1H681J	± 5%.50V	1	
C 153		CER CAP	1μ F.50V		
		CK737F1H105Z	+80/-20%	1	
C 154		CER CAP	0.1μ F		
		CK733B1H104K	± 10%.50V	1	
C 155		NOT ASSIGN			
C 156		CER CAP	1μ F.50V		
		CK737F1H105Z	+80/-20%	1	
C 157		CER CAP	0.1μ F		
		CK733B1H104K	± 10%.50V	1	
C 158		CER CAP	0.1μ F		
		CK733B1H104K	± 10%.50V	1	
C 159		CER CAP	1μ F.50V		
		CK737F1H105Z	+80/-20%	1	
C 160		CER CAP	1000p F		
		CK732B1H102K	± 10%.50V	1	
C 161		CER CAP	1000p F		
		CK732B1H102K	± 10%.50V	1	

※ : Selected at factory

DRAWING No. 44MR6733 -11 7/36

© TEC 1993.07

ANRITSU CORP.

Ref. No.	Part Code	Description	Rating	Qty	Note
C 162		CER CAP	1000p F		
		CK732B1H102K	± 10%.50V	1	
C 163		CER CAP	1000p F		
		CK732B1H102K	± 10%.50V	1	
C 164		CER CAP	1000p F		
		CK732B1H102K	± 10%.50V	1	
C 165		CER CAP	1000p F		
		CK732B1H102K	± 10%.50V	1	
C 166		CER CAP	1000p F		
		CK732B1H102K	± 10%.50V	1	
C 167		CER CAP	8p F.50V		
		CC732CH1H080D	± 0.5p F	1	
C 168		NOT ASSIGN			
C 169		NOT ASSIGN			
C 170		CER CAP	0.1μ F		
		CK733B1H104K	± 10%.50V	1	
C 171		AL ELECTLT CAP	22μ F		
		CE04C1H220A	± 20%.50V	1	
C 172		AL ELECTLT CAP	22μ F		
		CE04C1H220A	± 20%.50V	1	
C 173		CER CAP	0.1μ F		
		CK733B1H104K	± 10%.50V	1	
C 174		CER CAP	0.1μ F		
		CK733B1H104K	± 10%.50V	1	
C 175		CER CAP	0.1μ F		
		CK733B1H104K	± 10%.50V	1	
C 176		CER CAP	0.1μ F		
		CK733B1H104K	± 10%.50V	1	
C 177		CER CAP	0.1μ F		
		CK733B1H104K	± 10%.50V	1	
C 178		NOT ASSIGN			
C 179		CER CAP	0.1μ F		
		CK733B1H104K	± 10%.50V	1	
C 180		CER CAP	0.1μ F		
		CK733B1H104K	± 10%.50V	1	
C 181		CER CAP	1000p F		
		CK732B1H102K	± 10%.50V	1	
C 182		CER CAP	0.1μ F		
		CK733B1H104K	± 10%.50V	1	
C 183		CER CAP	0.1μ F		
		CK733B1H104K	± 10%.50V	1	
C 184		CER CAP	0.1μ F		
		CK733B1H104K	± 10%.50V	1	

※ : Selected at factory

DRAWING No. 44MR6733 -11 8/36

© TEC 1993.07

ANRITSU CORP.

Ref. No.	Part Code	Description	Rating	Qty	Note
C 185		CER CAP	0.1μ F		
		CK733B1H104K	± 10%.50V	1	
C 186		CER CAP	1000p F		
		CK732B1H102K	± 10%.50V	1	
C 187		CER CAP	1000p F		
		CK732B1H102K	± 10%.50V	1	
C 188		AL ELECTLT CAP	22μ F		
		CE04C1H220A	± 20%.50V	1	
C 189		AL ELECTLT CAP	22μ F		
		CE04C1H220A	± 20%.50V	1	
C 190		AL ELECTLT CAP	22μ F		
		CE04C1H220A	± 20%.50V	1	
C 191		CER CAP	0.1μ F		
		CK733B1H104K	± 10%.50V	1	
C 192		CER CAP	0.1μ F		
		CK733B1H104K	± 10%.50V	1	
C 193		CER CAP	0.1μ F		
		CK733B1H104K	± 10%.50V	1	
C 194		CER CAP	1μ F.50V		
		CK737F1H105Z	+80/-20%	1	
C 195		CER CAP	0.1μ F		
		CK733B1H104K	± 10%.50V	1	
C 196		CER CAP	1μ F.50V		
		CK737F1H105Z	+80/-20%	1	
C 197		CER CAP	0.1μ F		
		CK733B1H104K	± 10%.50V	1	
C 198		NOT ASSIGN			
C 199		CER CAP	7p F.50V		
		CC732CH1H070D	± 0.5p F	1	
C 200		CER CAP	7p F.50V		
		CC732CH1H070D	± 0.5p F	1	
C 201		NOT ASSIGN			
C 202		CER CAP	1μ F.50V		
		CK737F1H105Z	+80/-20%	1	
C 203		CER CAP	0.1μ F		
		CK733B1H104K	± 10%.50V	1	
C 204		CER CAP	1μ F.50V		
		CK737F1H105Z	+80/-20%	1	
C 205		CER CAP	0.1μ F		
		CK733B1H104K	± 10%.50V	1	
C 206		CER CAP	0.1μ F		
		CK733B1H104K	± 10%.50V	1	
C 207		CER CAP	0.1μ F		
		CK733B1H104K	± 10%.50V	1	

※ : Selected at factory

DRAWING No. 44MR6733 -11 9/36

© TEC 1993.07

ANRITSU CORP.

Ref. No.	Part Code	Description	Rating	Qty	Note
C 208		CER CAP	1μ F.50V		
		CK737F1H105Z	+80/-20%	1	
C 209		CER CAP	0.1μ F		
		CK733B1H104K	± 10%.50V	1	
C 210		CER CAP	1μ F.50V		
		CK737F1H105Z	+80/-20%	1	
C 211		CER CAP	6p F.50V		
		CC732CH1H060D	± 0.5p F	1	
C 212		CER CAP	1000p F		
		CK732B1H102K	± 10%.50V	1	
C 213		CER CAP	15p F		
		CC732CH1H150J	± 5%.50V	1	
C 214		NOT ASSIGN			
C 215		CER CAP	3p F.50V		
		CC732CJ1H030C	± 0.25p F	1	
C 216		CER CAP	3p F.50V		
		CC732CJ1H030C	± 0.25p F	1	
C 217		CER CAP	3p F.50V		
		CC732CJ1H030C	± 0.25p F	1	
C 218		CER CAP	0.1μ F		
		CK733B1H104K	± 10%.50V	1	
C 219		CER CAP	0.1μ F		
		CK733B1H104K	± 10%.50V	1	
C 220		NOT ASSIGN			
C 221		NOT ASSIGN			
C 222		CER CAP	0.1μ F		
		CK733B1H104K	± 10%.50V	1	
C 223		CER CAP	0.1μ F		
		CK733B1H104K	± 10%.50V	1	
C 224		CER CAP	68p F		
		CC732CH1H680J	± 5%.50V	1	
C 225		CER CAP	0.1μ F		
		CK733B1H104K	± 10%.50V	1	
C 226		CER CAP	0.1μ F		
		CK733B1H104K	± 10%.50V	1	
C 227		CER CAP	0.1μ F		
		CK733B1H104K	± 10%.50V	1	
C 228		CER CAP	0.1μ F		
		CK733B1H104K	± 10%.50V	1	
C 229		CER CAP	0.1μ F		
		CK733B1H104K	± 10%.50V	1	
C 230		CER CAP	68p F		
		CC732CH1H680J	± 5%.50V	1	

※: Selected at factory

DRAWING No. 44W86733 -11

10/36

Ref. No.	Part Code	Description	Rating	Qty	Note
C 231		CER CAP	0.1μ F		
		CK733B1H104K	± 10%.50V	1	
C 232		CER CAP	0.1μ F		
		CK733B1H104K	± 10%.50V	1	
C 233		CER CAP	5p F.50V		
		CC732CH1H050D	± 0.5p F	1	
C 234		NOT ASSIGN			
C 235		CER CAP	180p F		
		CC732CH1H181J	± 5%.50V	1	
C 236		CER CAP	150p F		
		CC732CH1H151J	± 5%.50V	1	
C 237		CER CAP	390p F		
		CC732CH1H391J	± 5%.50V	1	
C 238		CER CAP	47p F		
		CC732CH1H470J	± 5%.50V	1	
C 239		CER CAP	220p F		
		CC732CH1H221J	± 5%.50V	1	
C 240		NOT ASSIGN			
C 241		CER CAP	1000p F		
		CK732B1H102K	± 10%.50V	1	
C 242		CER CAP	1000p F		
		CK732B1H102K	± 10%.50V	1	
C 243		CER CAP	2200p F		
		CK732B1H222K	± 10%.50V	1	
C 244		CER CAP	270p F		
		CC732CH1H271J	± 5%.50V	1	
C 245		CER CAP	1500p F		
		CK732B1H152K	± 10%.50V	1	
C 246		CER CAP	330p F		
		CC732CH1H331J	± 5%.50V	1	
C 247		CER CAP	270p F		
		CC732CH1H271J	± 5%.50V	1	
C 248		CER CAP			
		CC732CH1H681J		1	
C 249		CER CAP	100p F		
		CC732CH1H101J	± 5%.50V	1	
C 250		CER CAP	470p F		
		CC732CH1H471J	± 5%.50V	1	
C 251		TA ELECTLT CAP	47μ F		
		CS734EDJ476M	± 20%.6.3V	1	
C 252		CER CAP	5p F.50V		
		CC732CH1H050D	± 0.5p F	1	
C 253		CER CAP	0.1μ F		
		CK733B1H104K	± 10%.50V	1	

※: Selected at factory

DRAWING No. 44W86733 -11

11/36

Ref. No.	Part Code	Description	Rating	Qty	Note
C 254		CER CAP	0.1μ F		
		CK733B1H104K	± 10%.50V	1	
C 255		PLSTC FILM CAP	0.1μ F		
		ECQ-V1H104JW	± 5%.50V	1	
C 256		PLSTC FILM CAP	0.1μ F		
		ECQ-V1H104JW	± 5%.50V	1	
C 257		CER CAP	0.1μ F		
		CK733B1H104K	± 10%.50V	1	
C 258		CER CAP	0.1μ F		
		CK733B1H104K	± 10%.50V	1	
C 259		PLSTC FILM CAP	0.1μ F		
		ECQ-V1H104JW	± 5%.50V	1	
C 260		PLSTC FILM CAP	0.1μ F		
		ECQ-V1H104JW	± 5%.50V	1	
C 261		AL ELECTLT CAP	47μ F		
		CE04C1E470A	± 20%.25V	1	
C 262		AL ELECTLT CAP	47μ F		
		CE04C1E470A	± 20%.25V	1	
C 263		AL ELECTLT CAP	47μ F		
		CE04C1E470A	± 20%.25V	1	
C 264		CER CAP	0.1μ F		
		CK733B1H104K	± 10%.50V	1	
C 265		CER CAP	0.1μ F		
		CK733B1H104K	± 10%.50V	1	
C 266		CER CAP	0.1μ F		
		CK733B1H104K	± 10%.50V	1	
C 267		CER CAP	0.1μ F		
		CK733B1H104K	± 10%.50V	1	
C 268		NOT ASSIGN			
C 269		CER CAP	0.1μ F		
		CK733B1H104K	± 10%.50V	1	
C 270		CER CAP	0.1μ F		
		CK733B1H104K	± 10%.50V	1	
C 271		CER CAP	0.1μ F		
		CK733B1H104K	± 10%.50V	1	
C 272		AL ELECTLT CAP	47μ F		
		CE04C1E470A	± 20%.25V	1	
C 273		AL ELECTLT CAP	47μ F		
		CE04C1E470A	± 20%.25V	1	
C 274		AL ELECTLT CAP	470μ F		
		CE04C1A471A	± 20%.10V	1	
C 275		AL ELECTLT CAP	10μ F		
		CE04C1H100A	± 20%.50V	1	
C 276		CER CAP	1000p F		
		CK732B1H102K	± 10%.50V	1	

※: Selected at factory

DRAWING No. 44W86733 -11

12/36

Ref. No.	Part Code	Description	Rating	Qty	Note
C 277		NOT ASSIGN			
C 278		AL ELECTLT CAP	470μ F		
		CE04C1A471A	± 20%.10V	1	
C 279		NOT ASSIGN			
C 280		NOT ASSIGN			
C 281		CER CAP	0.1μ F		
		CK733B1H104K	± 10%.50V	1	
C 282		CER CAP	0.1μ F		
		CK733B1H104K	± 10%.50V	1	
C 283		CER CAP	0.1μ F		
		CK733B1H104K	± 10%.50V	1	
C 284		CER CAP	0.1μ F		
		CK733B1H104K	± 10%.50V	1	
C 285		CER CAP	0.1μ F		
		CK733B1H104K	± 10%.50V	1	
C 286		CER CAP	0.1μ F		
		CK733B1H104K	± 10%.50V	1	
C 287		CER CAP	0.1μ F		
		CK733B1H104K	± 10%.50V	1	
C 288		CER CAP	0.1μ F		
		CK733B1H104K	± 10%.50V	1	
C 289		CER CAP	0.1μ F		
		CK733B1H104K	± 10%.50V	1	
C 290		CER CAP	0.1μ F		
		CK733B1H104K	± 10%.50V	1	
C 291		CER CAP	0.1μ F		
		CK733B1H104K	± 10%.50V	1	
C 292		CER CAP	0.1μ F		
		CK733B1H104K	± 10%.50V	1	
C 293		CER CAP	0.1μ F		
		CK733B1H104K	± 10%.50V	1	
C 294		CER CAP	0.1μ F		
		CK733B1H104K	± 10%.50V	1	
C 295		CER CAP	4p F.50V		
		CC732CH1H040D	± 0.5p F	1	
C 296		CER CAP	1p F.50V		
		CC732CK1H010C	± 0.25p F	1	
C 297		CER CAP	1p F.50V		
		CC732CK1H010C	± 0.25p F	1	
C 298		CER CAP	15p F		
		CC732CH1H150J	± 5%.50V	1	

※: Selected at factory

DRAWING No. 44W86733 -11

13/36

Ref. No.	Part Code	Description	Rating	Qty	Note
J 1		PLUG	60PINS		
		CNF3-60P-2.54DS		1	
J 2		PLUG	02PINS		
		DF1-2P-2.3DS		1	
J 3					
		DF1-10S2.5R24-208-1		1	
J 4		PLUG			
		27CP-R-PC		1	
J 5		PLUG			
		27DP-LR		1	
J 6		PLUG			
		27DP-LR		1	
J 7		JACK			
		27DP-R-PC-1		1	
J 8					
		449J95479		1	
J 9					
		449J95480		1	
J 10					
		DIC-252		1	
J 11					
		FFC3AMEP		1	
J 12					
		DIC-252		1	
J 13					
		FFC3AMEP		1	
K 1					
		G5Y-1 DC12V		1	
K 2					
		G5Y-1 DC12V		1	
K 3					
		G5Y-1 DC12V		1	
K 4					
		G5Y-154C-AB DC12V		1	
K 5					
		G5Y-1-H DC12V		1	
K 6					
		G5Y-154C-AB DC12V		1	
K 7					
		G5Y-1-H DC12V		1	
K 8					
		G5Y-154C-AB DC12V		1	
K 9					
		G5Y-1-H DC12V		1	

ANRITSU CORP.

Ref. No.	Part Code	Description	Rating	Qty	Note
K 10					
		G5Y-154C-AB DC12V		1	
K 11					
		G5Y-1-H DC12V		1	
K 12					
		PG1A-12D		1	
K 13					
		G5Y-1 DC12V		1	
L 1		INDUCTOR	249μ H		
		339T25527K		1	
L 2		INDUCTOR	332μ H		
		339T25528D		1	
L 3		INDUCTOR	10mH.± 10%		
		LH1-103K		1	
L 4		INDUCTOR	1.45mH.± 2%		
		S39T10025D		1	
L 5		INDUCTOR			
		S39T10026		1	
L 6		INDUCTOR	476μ H		
		339T25529		1	
L 7		INDUCTOR	665μ H		
		339T25529K		1	
L 8		INDUCTOR	4.7μ H.± 10%		
		SP0408-4R7K		1	
L 9		INDUCTOR	4.7μ H.± 10%		
		SP0408-4R7K		1	
L 10		INDUCTOR	4.7μ H.± 10%		
		SP0408-4R7K		-1	
L 11		NOT ASSIGN			
L 12		NOT ASSIGN			
L 13		NOT ASSIGN			
L 14		NOT ASSIGN			
L 15		INDUCTOR	0.15μ H± 10%		
		NL322522-R15K		1	
L 16		INDUCTOR	14nH		
		34L74430K		1	
L 17		INDUCTOR			
		342T61287B		1	
L 18		INDUCTOR	1.0mH.± 10%		
		NL453232-102K		1	

ANRITSU CORP.

Ref. No.	Part Code	Description	Rating	Qty	Note
L 19		INDUCTOR	220μ H.± 10%		
		NL453232-221K		1	
L 20		INDUCTOR	220μ H.± 10%		
		NL453232-221K		1	
L 21		(R=4mm N=1turb			
		PATTERN COIL		1	
L 22		(R=4mm N=1turb			
		PATTERN COIL		1	
L 23		(R=2.25mm N=1.25b			
		PATTERN COIL		1	
L 24		(R=3.25mm N=1.25b			
		PATTERN COIL		1	
L 25		(R=3.25mm N=1.25b			
		PATTERN COIL		1	
L 26		(R=2.25mm N=1.75b			
		PATTERN COIL		1	
L 27		(R=2.25mm N=1.75b			
		PATTERN COIL		1	
L 28		INDUCTOR	22μ H.± 10%		
		NL453232-220K		1	
L 29		INDUCTOR	22μ H.± 10%		
		NL453232-220K		1	
L 30		INDUCTOR			
		442T46012C		1	
L 31		INDUCTOR			
		442T46014B		1	
L 32		NOT ASSIGN			
L 33		NOT ASSIGN			
L 34		NOT ASSIGN			
L 35		INDUCTOR	22μ H.± 10%		
		NL453232-220K		1	
L 36		(R=2mm N=1turb			
		PATTERN COIL		1	
L 37		(R=2mm N=1.5tub			
		PATTERN COIL		1	
L 38		INDUCTOR	0.15μ H± 10%		
		NL322522-R15K		1	
L 39		NOT ASSIGN			
L 40		NOT ASSIGN			
L 41		NOT ASSIGN			

ANRITSU CORP.

Ref. No.	Part Code	Description	Rating	Qty	Note
L 42		NOT ASSIGN			
L 43		NOT ASSIGN			
L 44		INDUCTOR	0.47μ H± 10%		
		NL322522-R47K		1	
L 45		INDUCTOR	30mm		
		LT-85		1	
L 46		INDUCTOR	1.0mH.± 10%		
		LH1-102K		1	
L 47		INDUCTOR	21nH		
		34L74431K		1	
L 48		NOT ASSIGN			
L 49		INDUCTOR	10nH		
		34L74431J		1	
L 50		INDUCTOR			
		SFT8-505		1	
L 51		INDUCTOR	10μ H.± 10%		
		NL453232-100K		1	
L 52		INDUCTOR	10μ H.± 10%		
		NL453232-100K		1	
L 53		INDUCTOR	10nH		
		34L74431J		1	
Q 1					
		μ PD7011C		1	
Q 2		TRANSISTOR			
		2SC1623 (LS OR L		1	
Q 3		TRANSISTOR			
		2SC1623 (LS OR L		1	
Q 4		IC			
		74HC1S4		1	
Q 5		IC			
		μ PC78L05J		1	
Q 6		IC			
		74HC174F		1	
Q 7					
		TD62004F		1	
Q 8		DIODE			
		1S2835		1	
Q 9		DIODE			
		1S2835		1	
Q 10		DIODE			
		1S2835		1	

ANRITSU CORP.

Ref. No.	Part Code	Description	Rating	Qty	Note
Q 11		DIODE 1S2835		1	
Q 12		TRANSISTOR 2SC1623 (L5 OR L		1	
Q 13		DIODE 1S2835		1	
Q 14		TRANSISTOR 2SC1623 (L5 OR L		1	
Q 15		NOT ASSIGN			
Q 16		ZENER DIODE RD3.9MB		1	
Q 17		NOT ASSIGN			
Q 18		NOT ASSIGN			
Q 19		NOT ASSIGN			
Q 20		NOT ASSIGN			
Q 21		DIODE 1S2208		1	
Q 22		DIODE 1S2208		1	
Q 23		FET 2SK152-2		1	
Q 24		IC μ PC1654A		1	
Q 25		μ PB597CX		1	
Q 26		μ PD2833C		1	
Q 27		IC 74HC175F		1	
Q 28		2SC1622A (D16 OR D		1	
Q 29		2SC1622A (D16 OR D		1	
Q 30		IC μ PC258G		1	
Q 31		DIODE 1S2837		1	
Q 32		DIODE 1S2837		1	
Q 33		NJM79L09A		1	

Rev. No./Date

Selected at factory

DRAWING No. 44W86733 -11

18/36

ANRITSU CORP.

Ref. No.	Part Code	Description	Rating	Qty	Note
Q 34		μ PD5200G		1	
Q 35		DIODE 1SV34		1	
Q 36		IC μ PC1651G		1	
Q 37		IC MWA220		1	
Q 38		IC MWA230		1	
Q 39		TRANSISTOR 2SC1251		1	
Q 40		DIODE 1SS97		1	
Q 41		IC μ PC454D		1	
Q 42		DIODE 1SS97		1	
Q 43		NOT ASSIGN			
Q 44		IC μ PC251G2		1	
Q 45		μ PD7011C		1	
Q 46		IC μ PC1651G		1	
Q 47		IC MWA320		1	
Q 48		DIODE 1S2835		1	
Q 49		NOT ASSIGN			
Q 50		ZENER DIODE RD5.1MB2		1	
Q 51		DIODE 1S2208		1	
Q 52		TRANSISTOR 2SC3603		1	
Q 53		TRANSISTOR 2SC2351 (R2 OR R		1	
Q 54		μ PD7011C		1	
Q 55		IC 74HC574F		1	
Q 56		IC 74HC174F		1	

Rev. No./Date

Selected at factory

DRAWING No. 44W86733 -11

19/36

ANRITSU CORP.

Ref. No.	Part Code	Description	Rating	Qty	Note
Q 57		IC μ PC648C		1	
Q 58		IC μ PC454D		1	
Q 59		μ PC151G		1	
Q 60		NOT ASSIGN			
Q 61		NOT ASSIGN			
Q 62		ZENER DIODE RD7.5MB2		1	
Q 63		NOT ASSIGN			
Q 64		NOT ASSIGN			
Q 65		IC 74121		1	
Q 66		IC μ PA39A		1	
Q 67		μ PC4570G2		1	
Q 68		TRANSISTOR 2SC1623 (L5 OR L		1	
Q 69		μ PC4570G2		1	
Q 70		ZENER DIODE RD3.9MB		1	
Q 71		TRANSISTOR 2SC1251		1	
Q 72		NOT ASSIGN			
Q 73		NOT ASSIGN			
Q 74		DIODE 1S953		1	
Q 75		NOT ASSIGN			
Q 76		DIODE 1S2837		1	
Q 77		IC 74HC374F		1	
Q 78		TD62081AF		1	
Q 79		IC μ PC1651G		1	

Rev. No./Date

Selected at factory

DRAWING No. 44W86733 -11

20/36

ANRITSU CORP.

Ref. No.	Part Code	Description	Rating	Qty	Note
Q 80		NOT ASSIGN			
Q 81		MB504L SOP-8		1	
Q 82		TRANSISTOR 2SC2351 (R2 OR R		1	
Q 83		DIODE 1S2835		1	
Q 84		NOT ASSIGN			
Q 85		IC 74HC04F		1	
Q 86		IC 74HC374F		1	
Q 87		IC AD7533KN		1	
Q 88		IC μ PC251G2		1	
Q 89		IC μ PC151G		1	
Q 90		IC 74HC174F		1	
Q 91		IC 74HC174F		1	
Q 92		IC AD7533KN		1	
Q 93		DIODE 1S2835		1	
Q 94		μ PD5201G		1	
Q 95		IC μ PC251G2		1	
Q 96		TC4052BF		1	
Q 97		IC μ PC251G2		1	
Q 98		IC μ PC251G2		1	
Q 99		DIODE 1SS123		1	
Q 100		NOT ASSIGN			
Q 101		ZENER DIODE RD5.1MB2		1	
Q 102		DIODE 1S2835		1	

Rev. No./Date

Selected at factory

DRAWING No. 44W86733 -11

21/36

ANRITSU CORP.

Ref. No.	Part Code	Description	Rating	Qty	Note
Q 103		NOT ASSIGN			
Q 104		IC			
		TC40S3BF		1	
Q 105		IC			
		μ PC271G2		1	
Q 106					
		TC40S2BF		1	
Q 107					
		μ PC78L08J		1	
Q 108					
		NJM79L09A		1	
Q 109					
		P87JA-G3S-380		1	
Q 110		IC			
		μ PC1630SHF		1	
Q 111		IC			
		μ PC2S1G2		1	
Q 112		ZENER DIODE			
		RD6.2EB		1	
Q 113					
		PTH60U331M		1	
R 1		CERMET RESISTOR	1k Ω		
		RK73M2A102J	± 5%.1/10W	1	
R 2		CERMET RESISTOR	1k Ω		
		RK73M2A102J	± 5%.1/10W	1	
R 3		CERMET RESISTOR	100Ω		
		RK73M2A101J	± 5%.1/10W	1	
R 4		CERMET RESISTOR	1k Ω		
		RK73M2A102J	± 5%.1/10W	1	
R 5		CERMET RESISTOR	1k Ω		
		RK73M2A102J	± 5%.1/10W	1	
R 6		CERMET RESISTOR	100Ω		
		RK73M2A101J	± 5%.1/10W	1	
R 7		CERMET RESISTOR	1k Ω		
		RK73M2A102J	± 5%.1/10W	1	
R 8		VARIABLE RESISTOR	100k Ω		
		RG04B104H	± 20%.1/4W	1	•
R 9		METAL FILM RESISTOR	7.5k Ω		
		RN73G2A752D	± 0.5%.1/10W	1	
R 10		VARIABLE RESISTOR	10k Ω		
		RG04B103H	± 20%.1/4W	1	•

• Separated at factory

© TEC 1993.07

ANRITSU CORP.

Ref. No.	Part Code	Description	Rating	Qty	Note
R 11		CERMET RESISTOR	3.3k Ω		
		RK73M2A332J	± 5%.1/10W	1	
R 12		VARIABLE RESISTOR	1k Ω		
		RG04B102H	± 20%.1/4W	1	•
R 13		CERMET RESISTOR	3.3k Ω		
		RK73M2A332J	± 5%.1/10W	1	
R 14		CERMET RESISTOR	3.3k Ω		
		RK73M2A332J	± 5%.1/10W	1	
R 15		VARIABLE RESISTOR	1k Ω		
		RG04B102H	± 20%.1/4W	1	•
R 16		CERMET RESISTOR	3.3k Ω		
		RK73M2A332J	± 5%.1/10W	1	
R 17		CERMET RESISTOR	3.3k Ω		
		RK73M2A332J	± 5%.1/10W	1	
R 18		VARIABLE RESISTOR	1k Ω		
		RG04B102H	± 20%.1/4W	1	•
R 19		CERMET RESISTOR	3.3k Ω		
		RK73M2A332J	± 5%.1/10W	1	
R 20		CERMET RESISTOR	3.3k Ω		
		RK73M2A332J	± 5%.1/10W	1	
R 21		CERMET RESISTOR	100Ω		
		RK73M2A101J	± 5%.1/10W	1	
R 22		CERMET RESISTOR	100Ω		
		RK73M2A101J	± 5%.1/10W	1	
R 23		CERMET RESISTOR	2.2k Ω		
		RK73M2A222J	± 5%.1/10W	1	
R 24		VARIABLE RESISTOR	500Ω		
		RG04B501H	± 20%.1/4W	1	•
R 25		CERMET RESISTOR	3.3k Ω		
		RK73M2A332J	± 5%.1/10W	1	
R 26		CERMET RESISTOR	3.3k Ω		
		RK73M2A332J	± 5%.1/10W	1	
R 27		CERMET RESISTOR	3.3k Ω		
		RK73M2A332J	± 5%.1/10W	1	
R 28		CERMET RESISTOR	100Ω		
		RK73M2A101J	± 5%.1/10W	1	
R 29		CERMET RESISTOR	100Ω		
		RK73M2A101J	± 5%.1/10W	1	
R 30		CERMET RESISTOR	2.2k Ω		
		RK73M2A222J	± 5%.1/10W	1	
R 31		CERMET RESISTOR	10k Ω		
		RK73M2A103J	± 5%.1/10W	1	
R 32		CERMET RESISTOR	10k Ω		
		RK73M2A103J	± 5%.1/10W	1	
R 33		CERMET RESISTOR	10k Ω		
		RK73M2A103J	± 5%.1/10W	1	

• Separated at factory

© TEC 1993.07

ANRITSU CORP.

Ref. No.	Part Code	Description	Rating	Qty	Note
R 34		CERMET RESISTOR	10k Ω		
		RK73M2A103J	± 5%.1/10W	1	
R 35		CERMET RESISTOR	10k Ω		
		RK73M2A103J	± 5%.1/10W	1	
R 36		METAL FILM RESISTOR	2k Ω		
		RN73G2A202D	± 0.5%.1/10W	1	
R 37		NOT ASSIGN			
R 38		NOT ASSIGN			
R 39		NOT ASSIGN			
R 40		NOT ASSIGN			
R 41		CERMET RESISTOR	51Ω		
		RK73M2A510J	± 5%.1/10W	1	
R 42		CERMET RESISTOR	10k Ω		
		RK73M2A103J	± 5%.1/10W	1	
R 43		CERMET RESISTOR	680Ω		
		RK73M2A681J	± 5%.1/10W	1	
R 44		CERMET RESISTOR	10k Ω		
		RK73M2A103J	± 5%.1/10W	1	
R 45		CERMET RESISTOR	6.8k Ω		
		RK73M2A682J	± 5%.1/10W	1	
R 46		CERMET RESISTOR	47Ω		
		RK73M2A470J	± 5%.1/10W	1	
R 47		CERMET RESISTOR	4.7-51 Ω		
		RK73M2A4R7-510J	± 5%.1/10W	1	•SHORT
R 48		CERMET RESISTOR	51Ω		
		RK73M2A510J	± 5%.1/10W	1	
R 49		CERMET RESISTOR	100k Ω		
		RK73M2A104J	± 5%.1/10W	1	
R 50		CERMET RESISTOR	10k Ω		
		RK73M2A103J	± 5%.1/10W	1	
R 51		CARBON FILM RES	1k Ω		
		ARD2ST102J	± 5%.1/4W	1	
R 52		CERMET RESISTOR	12k Ω		
		RK73M2A123J	± 5%.1/10W	1	
R 53		CERMET RESISTOR	470Ω		
		RK73M2A471J	± 5%.1/10W	1	
R 54		CERMET RESISTOR	150k Ω		
		RK73M2A154J	± 5%.1/10W	1	
R 55		CERMET RESISTOR	390Ω		
		RK73M2A391J	± 5%.1/10W	1	
R 56		CERMET RESISTOR	100k Ω		
		RK73M2A104J	± 5%.1/10W	1	

• Separated at factory

© TEC 1993.07

ANRITSU CORP.

Ref. No.	Part Code	Description	Rating	Qty	Note
R 57		CERMET RESISTOR	100Ω		
		RK73M2A101J	± 5%.1/10W	1	
R 58		CERMET RESISTOR	1k Ω		
		RK73M2A102J	± 5%.1/10W	1	
R 59		CERMET RESISTOR	10k Ω		
		RK73M2A103J	± 5%.1/10W	1	
R 60		CERMET RESISTOR	220Ω		
		RK73M2A221J	± 5%.1/10W	1	
R 61		CERMET RESISTOR	10Ω		
		RK73M2A100J	± 5%.1/10W	1	
R 62		METAL FILM RESISTOR	1k Ω		
		RN73G2A102D	± 0.5%.1/10W	1	
R 63		CERMET RESISTOR	51Ω		
		RK73M2A510J	± 5%.1/10W	1	
R 64		NOT ASSIGN			
R 65		NOT ASSIGN			
R 66		CERMET RESISTOR	330-1M Ω		
		RK73M2A331-10SJ	± 5%.1/10W	1	•OPEN
R 67		CERMET RESISTOR	330Ω		
		RK73M2A331J	± 5%.1/10W	1	
R 68		CERMET RESISTOR	4.7-22 Ω		
		RK73M2A4R7-220J	± 5%.1/10W	1	•SHORT
R 69		CERMET RESISTOR	330Ω		
		RK73M2A331J	± 5%.1/10W	1	
R 70		CERMET RESISTOR	330Ω		
		RK73M2A331J	± 5%.1/10W	1	
R 71		CERMET RESISTOR	22Ω		
		RK73M2A220J	± 5%.1/10W	1	
R 72		CERMET RESISTOR	330Ω		
		RK73M2A331J	± 5%.1/10W	1	
R 73		CERMET RESISTOR	330Ω		
		RK73M2A331J	± 5%.1/10W	1	
R 74		CERMET RESISTOR	15Ω		
		RK73M2A150J	± 5%.1/10W	1	
R 75		CERMET RESISTOR	51Ω		
		RK73M2A510J	± 5%.1/10W	1	
R 76		CERMET RESISTOR	330Ω		
		RK73M2A331J	± 5%.1/10W	1	
R 77		CERMET RESISTOR	330Ω		
		RK73M2A331J	± 5%.1/10W	1	
R 78		CERMET RESISTOR	15Ω		
		RK73M2A150J	± 5%.1/10W	1	
R 79		NOT ASSIGN			

• Separated at factory

© TEC 1993.07

ANRITSU CORP.

Ref. No.	Part Code	Description	Rating	Qty	Note
R 80		NOT ASSIGN			
R 81		METAL FILM RESISTOR	100k Ω		
		RN73G2A104D	± 0.5%.1/10W	1	
R 82		METAL FILM RESISTOR	100k Ω		
		RN73G2A104D	± 0.5%.1/10W	1	
R 83		CERMET RESISTOR	120Ω		
		RK73M2A121J	± 5%.1/10W	1	
R 84		CERMET RESISTOR	12k Ω		
		RK73M2A123J	± 5%.1/10W	1	
R 85		METAL FILM RESISTOR	1k Ω		
		RN73G2A102D	± 0.5%.1/10W	1	
R 86		CERMET RESISTOR	2k Ω		
		RK73M2A202J	± 5%.1/10W	1	
R 87		CERMET RESISTOR	1MΩ		
		RK73M2A105J	± 5%.1/10W	1	
R 88		CERMET RESISTOR	10Ω		
		RK73M2A100J	± 5%.1/10W	1	
R 89		METAL FILM RESISTOR	75k Ω		
		RN73G2A753D	± 0.5%.1/10W	1	
R 90		VARIABLE RESISTOR	1k Ω		
		RG04B102H	± 20%.1/4W	1	•
R 91		METAL FILM RESISTOR	2k Ω		
		RN73G2A202D	± 0.5%.1/10W	1	
R 92		METAL FILM RESISTOR	2k Ω		
		RN73G2A202D	± 0.5%.1/10W	1	
R 93		VARIABLE RESISTOR	100k Ω		
		RG04B104H	± 20%.1/4W	1	•
R 94		METAL FILM RESISTOR	7.5k Ω		
		RN73G2A7S2D	± 0.5%.1/10W		
R 95		VARIABLE RESISTOR	10k Ω		
		RG04B103H	± 20%.1/4W	1	•
R 96		CERMET RESISTOR	330Ω		
		RK73M2A331J	± 5%.1/10W	1	
R 97		CERMET RESISTOR	330Ω		
		RK73M2A331J	± 5%.1/10W	1	
R 98		CERMET RESISTOR	15Ω		
		RK73M2A150J	± 5%.1/10W	1	
R 99		METAL FILM RESISTOR	22k Ω		
		RN73G2A223D	± 0.5%.1/10W	1	
R 100		VARIABLE RESISTOR	5k Ω		
		RG04B502H	± 20%.1/4W	1	•
R 101		CERMET RESISTOR	10k Ω		
		RK73M2A103J	± 5%.1/10W	1	
R 102		CERMET RESISTOR	51Ω		
		RK73M2A510J	± 5%.1/10W	1	

*: Selected at factory DRAWING No. 44W86733 -11 26/36

h TTZI 1993.07

ANRITSU CORP.

Ref. No.	Part Code	Description	Rating	Qty	Note
R 103		CERMET RESISTOR	330Ω		
		RK73M2A331J	± 5%.1/10W	1	
R 104		CERMET RESISTOR	330Ω		
		RK73M2A331J	± 5%.1/10W	1	
R 105					
		RS2FS331JL		1	
R 106		CARBON FILM RES	33Ω		
		ARD25T330J	± 5%.1/4W	1	
R 107		CARBON FILM RES	8.2k Ω		
		ARD25T822J	± 5%.1/4W	1	
R 108		CERMET RESISTOR	300Ω		
		RK73M2A301J	± 5%.1/10W	1	
R 109		CERMET RESISTOR	470Ω		
		RK73M2A471J	± 5%.1/10W	1	
R 110		CERMET RESISTOR	22k Ω		
		RK73M2A223J	± 5%.1/10W	1	
R 111		CERMET RESISTOR	4.7k Ω		
		RK73M2A472J	± 5%.1/10W	1	
R 112		CERMET RESISTOR	22k Ω		
		RK73M2A223J	± 5%.1/10W	1	
R 113		CERMET RESISTOR	22k Ω		
		RK73M2A223J	± 5%.1/10W	1	
R 114		CARBON FILM RES	120Ω		
		ARD25T121J	± 5%.1/4W	1	
R 115		CERMET RESISTOR	51Ω		
		RK73M2A510J	± 5%.1/10W	1	
R 116		CERMET RESISTOR	51Ω		
		RK73M2A510J	± 5%.1/10W	1	
R 117		METAL FILM RESISTOR	2k Ω		
		RN73G2A202D	± 0.5%.1/10W	1	
R 118		METAL FILM RESISTOR	2k Ω		
		RN73G2A202D	± 0.5%.1/10W	1	
R 119		VARIABLE RESISTOR	100k Ω		
		RG04B104H	± 20%.1/4W	1	•
R 120		METAL FILM RESISTOR	7.5k Ω		
		RN73G2A752D	± 0.5%.1/10W	1	
R 121		VARIABLE RESISTOR	10k Ω		
		RG04B103H	± 20%.1/4W	1	•
R 122		METAL FILM RESISTOR	4.7k Ω		
		RN73G2A472D	± 0.5%.1/10W	1	
R 123		METAL FILM RESISTOR	680Ω		
		RN73G2A681D	± 0.5%.1/10W	1	
R 124		METAL FILM RESISTOR	2.4k Ω		
		RN73G2A242D	± 0.5%.1/10W	1	
R 125		METAL FILM RESISTOR	4.3k Ω		
		RN73G2A432D	± 0.5%.1/10W	1	

*: Selected at factory DRAWING No. 44W86733 -11 27/36

h TTZI 1993.07

ANRITSU CORP.

Ref. No.	Part Code	Description	Rating	Qty	Note
R 126		METAL FILM RESISTOR	100k Ω		
		RN73G2A104D	± 0.5%.1/10W	1	
R 127		METAL FILM RESISTOR	20k Ω		
		RN73G2A203D	± 0.5%.1/10W	1	
R 128		METAL FILM RESISTOR	100k Ω		
		RN73G2A104D	± 0.5%.1/10W	1	
R 129		METAL FILM RESISTOR	10k Ω		
		RN73G2A103D	± 0.5%.1/10W	1	
R 130		METAL FILM RESISTOR	10k Ω		
		RN73G2A103D	± 0.5%.1/10W	1	
R 131		CERMET RESISTOR	820Ω		
		RK73M2A821J	± 5%.1/10W	1	
R 132		VARIABLE RESISTOR	500k Ω		
		RG04B504H	± 20%.1/4W	1	•
R 133		METAL FILM RESISTOR	2.4k Ω		
		RN73G2A242D	± 0.5%.1/10W	1	
R 134		METAL FILM RESISTOR	20k Ω		
		RN73G2A203D	± 0.5%.1/10W	1	
R 135		VARIABLE RESISTOR	500Ω		
		RG04B501H	± 20%.1/4W	1	•
R 136		METAL FILM RESISTOR	1.3k Ω		
		RN73G2A132D	± 0.5%.1/10W	1	
R 137		METAL FILM RESISTOR	1k Ω		
		RN73G2A102D	± 0.5%.1/10W	1	
R 138		NOT ASSIGN			
R 139		NOT ASSIGN			
R 140		METAL FILM RESISTOR	5.1k Ω		
		RN73G2A512D	± 0.5%.1/10W	1	
R 141		METAL FILM RESISTOR	8.2k Ω		
		RN73G2A822D	± 0.5%.1/10W	1	
R 142		METAL FILM RESISTOR	6.8k Ω		
		RN73G2A682D	± 0.5%.1/10W	1	
R 143		METAL FILM RESISTOR	1K-100K Ω		
		RN73G2A102-104D	± 0.5%.1/10W	1	•OPEN
R 144		METAL FILM RESISTOR	1k Ω		
		RN73G2A102D	± 0.5%.1/10W	1	
R 145		METAL FILM RESISTOR	10-1K Ω		
		RN73G2A100-102D	± 0.5%.1/10W	1	•SHORT
R 146		METAL FILM RESISTOR	2k Ω		
		RN73G2A202D	± 0.5%.1/10W	1	
R 147		METAL FILM RESISTOR	2.2k Ω		
		RN73G2A222D	± 0.5%.1/10W	1	
R 148		METAL FILM RESISTOR	4.3k Ω		
		RN73G2A432D	± 0.5%.1/10W	1	

*: Selected at factory DRAWING No. 44W86733 -11 28/36

h TTZI 1993.07

ANRITSU CORP.

Ref. No.	Part Code	Description	Rating	Qty	Note
R 149		CERMET RESISTOR	1MΩ		
		RK73M2A105J	± 5%.1/10W	1	
R 150		NOT ASSIGN			
R 151		CERMET RESISTOR	1k Ω		
		RK73M2A102J	± 5%.1/10W	1	
R 152		CERMET RESISTOR	1k Ω		
		RK73M2A102J	± 5%.1/10W	1	
R 153		CERMET RESISTOR	1k Ω		
		RK73M2A102J	± 5%.1/10W	1	
R 154		CERMET RESISTOR	2.2k Ω		
		RK73M2A222J	± 5%.1/10W	1	
R 155		METAL FILM RESISTOR	5.6k Ω		
		RN73G2A562D	± 0.5%.1/10W	1	
R 156		CERMET RESISTOR	1k Ω		
		RK73M2A102J	± 5%.1/10W	1	
R 157		METAL FILM RESISTOR	680Ω		
		RN73G2A681D	± 0.5%.1/10W	1	
R 158		VARIABLE RESISTOR	2k Ω		
		RG04B202H	± 20%.1/4W	1	•
R 159		METAL FILM RESISTOR	1.8k Ω		
		RN73G2A182D	± 0.5%.1/10W	1	
R 160		METAL FILM RESISTOR	10-10K Ω		
		RN73G2A100-103D	± 0.5%.1/10W	1	•SHORT
R 161		METAL FILM RESISTOR	820Ω		
		RN73G2A821D	± 0.5%.1/10W	1	
R 162		METAL FILM RESISTOR	226Ω		
		NRN1/4C4226Ω D	± 0.5%.1/4W	1	
R 163		METAL FILM RESISTOR	2k Ω		
		RN73G2A202D	± 0.5%.1/10W	1	
R 164		METAL FILM RESISTOR	1k Ω		
		RN73G2A102D	± 0.5%.1/10W	1	
R 165		METAL FILM RESISTOR	390Ω		
		RN73G2A391D	± 0.5%.1/10W	1	
R 166		METAL FILM RESISTOR	10k Ω		
		RN73G2A103D	± 0.5%.1/10W	1	
R 167		METAL FILM RESISTOR	4.7k Ω		
		RN73G2A472D	± 0.5%.1/10W	1	
R 168		METAL FILM RESISTOR	10k Ω		
		RN73G2A103D	± 0.5%.1/10W	1	
R 169		METAL FILM RESISTOR	15k Ω		
		RN73G2A153D	± 0.5%.1/10W	1	
R 170		NOT ASSIGN			
R 171		CERMET RESISTOR	33Ω		
		RK73M2A330J	± 5%.1/10W	1	

*: Selected at factory DRAWING No. 44W86733 -11 29/36

h TTZI 1993.07

ANRITSU CORP.

Ref. No.	Part Code	Description	Rating	Qty	Note
R 172		METAL FILM RESISTOR	75Ω		
		RN73G2A750D	± 0.5%,1/10W	1	
R 173		METAL FILM RESISTOR	120Ω		
		RN14K2H121J	± 5%,1/2W	1	
R 174		CERMET RESISTOR	22Ω		
		RK73M2A220J	± 5%,1/10W	1	
R 175		METAL FILM RESISTOR	226Ω		
		NRN1/4C4228Ω D	± 0.5%,1/4W	1	
R 176		METAL FILM RESISTOR	226Ω		
		NRN1/4C4226Ω D	± 0.5%,1/4W	1	
R 177		METAL FILM RESISTOR	35.7Ω		
		NRN1/4C435.7Ω D	± 0.5%,1/4W	1	
R 178		METAL FILM RESISTOR	332Ω		
		NRN1/4C4332Ω D	± 0.5%,1/4W	1	
R 179		METAL FILM RESISTOR	332Ω		
		NRN1/4C4332Ω D	± 0.5%,1/4W	1	
R 180		METAL FILM RESISTOR	79.3Ω		
		NRN1/4C479.3Ω D	± 0.5%,1/4W	1	
R 181		METAL FILM RESISTOR	174Ω		
		NRN1/4C4174Ω D	± 0.5%,1/4W	1	
R 182		METAL FILM RESISTOR	174Ω		
		NRN1/4C4174Ω D	± 0.5%,1/4W	1	
R 183		NOT ASSIGN			
R 184		METAL FILM RESISTOR			
		NRN1/4C4103.3Ω D		1	
R 185		METAL FILM RESISTOR			
		NRN1/4C4103.3Ω D		1	
R 186		METAL FILM RESISTOR	790Ω		
		NRN1/4C4790Ω D	± 0.5%,1/4W	1	
R 187		METAL FILM RESISTOR	332Ω		
		NRN1/4C4332Ω D	± 0.5%,1/4W	1	
R 188		METAL FILM RESISTOR	79.3Ω		
		NRN1/4C479.3Ω D	± 0.5%,1/4W	1	
R 189		METAL FILM RESISTOR	79.3Ω		
		NRN1/4C479.3Ω D	± 0.5%,1/4W	1	
R 190		METAL FILM RESISTOR			
		NRN1/4C42.87KΩ D		1	
R 191		METAL FILM RESISTOR			
		NRN1/4C43.24KΩ D		1	
R 192		CERMET RESISTOR	150Ω		
		RK73M2A151J	± 5%,1/10W	1	
R 193		CERMET RESISTOR	150Ω		
		RK73M2A151J	± 5%,1/10W	1	
R 194		CERMET RESISTOR	33Ω		
		RK73M2A330J	± 5%,1/10W	1	

ANRITSU CORP.

Ref. No.	Part Code	Description	Rating	Qty	Note
R 195		METAL FILM RESISTOR	880Ω		
		RN73G2A881D	± 0.5%,1/10W	1	
R 196		CERMET RESISTOR	22Ω		
		RK73M2A220J	± 5%,1/10W	1	
R 197		CERMET RESISTOR	51Ω		
		RK73M2A510J	± 5%,1/10W	1	
R 198		NOT ASSIGN			
R 199		CERMET RESISTOR	1k Ω		
		RK73M2A102J	± 5%,1/10W	1	
R 200		CERMET RESISTOR	51Ω		
		RK73M2A510J	± 5%,1/10W	1	
R 201		METAL FILM RESISTOR	680Ω		
		RN73G2A681D	± 0.5%,1/10W	1	
R 202		CERMET RESISTOR	330Ω		
		RK73M2A331J	± 5%,1/10W	1	
R 203		METAL FILM RESISTOR	439Ω		
		NRN1/4C4439Ω D	± 0.5%,1/4W	1	
R 204		METAL FILM RESISTOR	439Ω		
		NRN1/4C4439Ω D	± 0.5%,1/4W	1	
R 205		METAL FILM RESISTOR	26.7Ω		
		NRN1/4C426.7Ω D	± 0.5%,1/4W	1	
R 206		METAL FILM RESISTOR	680Ω		
		RN73G2A681D	± 0.5%,1/10W	1	
R 207					
		RS2FS331JL		1	
R 208		CARBON FILM RES	22Ω		
		ARD25T220J	± 5%,1/4W	1	
R 209					
		RS2FS101JL		1	
R 210		CARBON FILM RES	22Ω		
		ARD25T220J	± 5%,1/4W	1	
R 211		METAL FILM RESISTOR	180Ω		
		RN73G2A181D	± 0.5%,1/10W	1	
R 212		CERMET RESISTOR	1k Ω		
		RK73M2A102J	± 5%,1/10W	1	
R 213		CERMET RESISTOR	150Ω		
		RK73M2A151J	± 5%,1/10W	1	
R 214		CERMET RESISTOR	100Ω		
		RK73M2A101J	± 5%,1/10W	1	
R 215		VARIABLE RESISTOR	200Ω		
		RG04B201H	± 20%,1/4W	1	*
R 216					
		RS2FS470JL		1	
R 217		CERMET RESISTOR	10Ω		
		RK73M2A100J	± 5%,1/10W	1	

ANRITSU CORP.

Ref. No.	Part Code	Description	Rating	Qty	Note
R 218		CARBON FILM RES	10Ω		
		ARD25T100J	± 5%,1/4W	1	
R 219		CARBON FILM RES	10Ω		
		ARD25T100J	± 5%,1/4W	1	
R 220		CERMET RESISTOR	680Ω		
		RK73M2A681J	± 5%,1/10W	1	
R 221		CERMET RESISTOR	150Ω		
		RK73M2A151J	± 5%,1/10W	1	
R 222		NOT ASSIGN			
R 223		NOT ASSIGN			
R 224		CERMET RESISTOR	75Ω		
		RK73M2A750J	± 5%,1/10W	1	
R 225		CERMET RESISTOR	10k Ω		
		RK73M2A103J	± 5%,1/10W	1	
R 226		CERMET RESISTOR	10k Ω		
		RK73M2A103J	± 5%,1/10W	1	
R 227		CERMET RESISTOR	220k Ω		
		RK73M2A224J	± 5%,1/10W	1	
R 228		CERMET RESISTOR	220k Ω		
		RK73M2A224J	± 5%,1/10W	1	
R 229		METAL FILM RESISTOR	11k Ω		
		RN73G2A113D	± 0.5%,1/10W	1	
R 230		METAL FILM RESISTOR	680Ω		
		RN73G2A681D	± 0.5%,1/10W	1	
R 231		METAL FILM RESISTOR	820Ω		
		RN73G2A821D	± 0.5%,1/10W	1	
R 232		CERMET RESISTOR	220k Ω		
		RK73M2A224J	± 5%,1/10W	1	
R 233		CERMET RESISTOR	680k Ω		
		RK73M2A684J	± 5%,1/10W	1	
R 234		CERMET RESISTOR	220k Ω		
		RK73M2A224J	± 5%,1/10W	1	
R 235		CERMET RESISTOR	680k Ω		
		RK73M2A684J	± 5%,1/10W	1	
R 236		CERMET RESISTOR	680k Ω		
		RK73M2A684J	± 5%,1/10W	1	
R 237		CERMET RESISTOR	220k Ω		
		RK73M2A224J	± 5%,1/10W	1	
R 238		NOT ASSIGN			
R 239		METAL FILM RESISTOR	11k Ω		
		RN73G2A113D	± 0.5%,1/10W	1	
R 240		METAL FILM RESISTOR	680Ω		
		RN73G2A681D	± 0.5%,1/10W	1	

ANRITSU CORP.

Ref. No.	Part Code	Description	Rating	Qty	Note
R 241		METAL FILM RESISTOR	1.3k Ω		
		RN73G2A132D	± 0.5%,1/10W	1	
R 242		CERMET RESISTOR	10k Ω		
		RK73M2A103J	± 5%,1/10W	1	
R 243		CERMET RESISTOR	10k Ω		
		RK73M2A103J	± 5%,1/10W	1	
R 244		CERMET RESISTOR	1MΩ		
		RK73M2A105J	± 5%,1/10W	1	
R 245		CERMET RESISTOR	10k Ω		
		RK73M2A103J	± 5%,1/10W	1	
R 246		CERMET RESISTOR	1k Ω		
		RK73M2A102J	± 5%,1/10W	1	
R 247		CERMET RESISTOR	10k Ω		
		RK73M2A103J	± 5%,1/10W	1	
R 248		CERMET RESISTOR	10k Ω		
		RK73M2A103J	± 5%,1/10W	1	
R 249		CERMET RESISTOR	10k Ω		
		RK73M2A103J	± 5%,1/10W	1	
R 250		CERMET RESISTOR	10k Ω		
		RK73M2A103J	± 5%,1/10W	1	
R 251		METAL FILM RESISTOR	20k Ω		
		RN73G2A203D	± 0.5%,1/10W	1	
R 252		CERMET RESISTOR	10k Ω		
		RK73M2A103J	± 5%,1/10W	1	
R 253		CERMET RESISTOR	220k Ω		
		RK73M2A224J	± 5%,1/10W	1	
R 254		CERMET RESISTOR	220Ω		
		RK73M2A221J	± 5%,1/10W	1	
R 255		CERMET RESISTOR	10k Ω		
		RK73M2A103J	± 5%,1/10W	1	
R 256		CERMET RESISTOR	22k Ω		
		RK73M2A223J	± 5%,1/10W	1	
R 257		VARIABLE RESISTOR	5k Ω		
		RG04B502H	± 20%,1/4W	1	*
R 258		CERMET RESISTOR	470Ω		
		RK73M2A471J	± 5%,1/10W	1	
R 259		CERMET RESISTOR	470Ω		
		RK73M2A471J	± 5%,1/10W	1	
R 260		CERMET RESISTOR	1k Ω		
		RK73M2A102J	± 5%,1/10W	1	
R 261		CERMET RESISTOR	22k Ω		
		RK73M2A223J	± 5%,1/10W	1	
R 262		CERMET RESISTOR	1k Ω		
		RK73M2A102J	± 5%,1/10W	1	
R 263		CERMET RESISTOR	2.2k Ω		
		RK73M2A222J	± 5%,1/10W	1	

ANRITSU CORP.

Ref. No.	Part Code	Description	Rating	Qty	Note
R 264		VARIABLE RESISTOR	500Ω		
		RG04B501H	± 20%.1/4W	1	*
R 265		CERMET RESISTOR	6.8k Ω		
		RK73M2A682J	± 5%.1/10W	1	
R 266		CERMET RESISTOR	1.5k Ω		
		RK73M2A152J	± 5%.1/10W	1	
R 267		CERMET RESISTOR	4.7-68 Ω		
		RK73M2A4R7-680J	± 5%.1/10W	1	*SHORT
R 268		CERMET RESISTOR	100-1M Ω		
		RK73M2A101-105J	± 5%.1/10W	1	*OPEN
R 269		METAL FILM RESISTOR	100k Ω		
		RN73G2A104D	± 0.5%.1/10W	1	
R 270		METAL FILM RESISTOR	100k Ω		
		RN73G2A104D	± 0.5%.1/10W	1	
R 271		METAL FILM RESISTOR	100k Ω		
		RN73G2A104D	± 0.5%.1/10W	1	
R 272		METAL FILM RESISTOR	100k Ω		
		RN73G2A104D	± 0.5%.1/10W	1	
R 273		METAL FILM RESISTOR	3k Ω		
		RN73G2A302D	± 0.5%.1/10W	1	
R 274		METAL FILM RESISTOR	3k Ω		
		RN73G2A302D	± 0.5%.1/10W	1	
R 275		METAL FILM RESISTOR	4.7k Ω		
		RN73G2A472D	± 0.5%.1/10W	1	
R 276		NOT ASSIGN			
R 277		METAL FILM RESISTOR	4.7k Ω		
		RN73G2A472D	± 0.5%.1/10W	1	
R 278		NOT ASSIGN			
R 279		CERMET RESISTOR	100k Ω		
		RK73M2A104J	± 5%.1/10W	1	
R 280		VARIABLE RESISTOR	2k Ω		
		RG04B202H	± 20%.1/4W	1	
R 281		VARIABLE RESISTOR	100Ω		
		RG04B101H	± 20%.1/4W	1	
R 282		METAL FILM RESISTOR	510Ω		
		RN73G2A511D	± 0.5%.1/10W	1	
R 283		METAL FILM RESISTOR	18Ω		
		RN73G2A180D	± 0.5%.1/10W	1	
R 284		METAL FILM RESISTOR	130Ω		
		RN73G2A131D	± 0.5%.1/10W	1	
R 285		METAL FILM RESISTOR	160Ω		
		RN73G2A161D	± 0.5%.1/10W	1	
R 286		RES ARRAY	4.7k Ω		
		RRS-4-472JA	± 5%.1/8W	1	

* : Selected at factory

DRAWING No. 44W86733 -11 34/36

ANRITSU CORP.

Ref. No.	Part Code	Description	Rating	Qty	Note
R 287		RES ARRAY	4.7k Ω		
		RRS-4-472JA	± 5%.1/8W	1	
R 288		METAL FILM RESISTOR	820Ω		
		RN73G2A821D	± 0.5%.1/10W	1	
R 289		METAL FILM RESISTOR	27k Ω		
		RN73G2A273D	± 0.5%.1/10W	1	
R 290		METAL FILM RESISTOR	5.6k Ω		
		RN73G2A562D	± 0.5%.1/10W	1	
R 291		METAL FILM RESISTOR	680Ω		
		RN73G2A681D	± 0.5%.1/10W	1	
R 292		METAL FILM RESISTOR	680Ω		
		RN73G2A681D	± 0.5%.1/10W	1	
R 293		METAL FILM RESISTOR	160Ω		
		RN73G2A161D	± 0.5%.1/10W	1	
R 294		METAL FILM RESISTOR	160Ω		
		RN73G2A161D	± 0.5%.1/10W	1	
R 295		METAL FILM RESISTOR	300Ω		
		RN73G2A301D	± 0.5%.1/10W	1	
R 296		METAL FILM RESISTOR	91Ω		
		RN73G2A910D	± 0.5%.1/10W	1	
R 297		METAL FILM RESISTOR	120Ω		
		RN73G2A121D	± 0.5%.1/10W	1	
R 298		METAL FILM RESISTOR	300Ω		
		RN73G2A301D	± 0.5%.1/10W	1	
R 299		METAL FILM RESISTOR	47Ω		
		RN73G2A470D	± 0.5%.1/10W	1	
R 300		METAL FILM RESISTOR	300Ω		
		RN73G2A301D	± 0.5%.1/10W	1	
R 301		METAL FILM RESISTOR	120Ω		
		RN73G2A121D	± 0.5%.1/10W	1	
R 302		NOT ASSIGN			
R 303		NOT ASSIGN			
R 304		METAL FILM RESISTOR	680Ω		
		RN73G2A681D	± 0.5%.1/10W	1	
R 305			300Ω		
		RN73G2A301D	± 0.5%.1/10W	1	
R 306			300Ω		
		RN73G2A301D	± 0.5%.1/10W	1	
R 307		CARBON FILM RES	150Ω		
		ARD25T151J	± 5%.1/4W	1	
R 308		METAL FILM RESISTOR	120Ω		
		RN14K2H121J	± 5%.1/2W	1	
R 309		METAL FILM RESISTOR	130Ω		
		RN73G2A131D	± 0.5%.1/10W	1	

* : Selected at factory

DRAWING No. 44W86733 -11 35/36

ANRITSU CORP.

Parts List of: A1-A2 SLOPE ADJ 3

Ref. No.	Part Code	Description	Rating	Qty	Note
R 310		RES ARRAY	3.3k Ω		
		RRS-4-332JA	± 5%.1/8W	1	
Z 1		M-2 DBM		1	

* : Selected at factory

DRAWING No. 44W86733 -11 36/36

ANRITSU CORP.

Ref. No.	Part Code	Description	Rating	Qty	Note
C 1		CER CAP	1000p F		
		CK924C1H102M	± 20%.50V	1	
C 2		CER CAP	0.1μ F		
		CK924C1H104M	± 20%.50V	1	
C 3		CER CAP	0.1μ F		
		CK924C1H104M	± 20%.50V	1	
C 4		CER CAP	68p F		
		CC924CH1H680J	± 5%.50V	1	
C 5		CER CAP	0.1μ F		
		CK924C1H104M	± 20%.50V	1	
C 6		AL ELECTLT CAP	10μ F		
		CE04C1H100A	± 20%.50V	1	
C 7		CER CAP	0.1μ F		
		CK924C1H104M	± 20%.50V	1	
C 8		CER CAP	0.1μ F		
		CK924C1H104M	± 20%.50V	1	
C 9		CER CAP	0.1μ F		
		CK924C1H104M	± 20%.50V	1	
C 10		CER CAP	0.1μ F		
		CK924C1H104M	± 20%.50V	1	
C 11		CER CAP	0.1μ F		
		CK924C1H104M	± 20%.50V	1	
C 12		CER CAP	0.1μ F		
		CK924C1H104M	± 20%.50V	1	
C 13		NOT ASSIGNED			
C 14		CER CAP	0.1μ F		
		CK924C1H104M	± 20%.50V	1	
C 15		CER CAP	0.1μ F		
		CK924C1H104M	± 20%.50V	1	
C 16		NOT ASSIGNED			
J 1		PLUG	10P		
		DF1-10P-2.50S		1	
Q 1		TRANSISTOR			
		2SC2718		1	
Q 2		NOT ASSIGNED			
Q 3		DIODE			
		1S2208		1	

DESIGNED BY

CHECKED BY

APPROVED BY

Dep.

* : Selected at factory

DRAWING No. 34W98026 1/3

ANRITSU CORP.

Parts List of: A1-A2 SLOPE ADJ

Ref. No.	Part Code	Description	Rating	Qty	Note
Q 4		IC μ PC151C		1	
Q 5		IC μ PC251C		1	
Q 6		IC μ PC251C		1	
Q 7		μ PQ5201C		1	
R 1		CARBON FILM RES ARD25T102J	1KΩ ± 5%.1/4W	1	
R 2		NOT ASSIGNED			
R 3		NOT ASSIGNED			
R 4		NOT ASSIGNED			
R 5		CARBON FILM RES ARD25T332J	3.3KΩ ± 5%.1/4W	1	
R 6		CARBON FILM RES ARD25T101J	100Ω ± 5%.1/4W	1	
R 7		CARBON FILM RES ARD25T222J	2.2KΩ ± 5%.1/4W	1	
R 8		CARBON FILM RES ARD25T103J	10KΩ ± 5%.1/4W	1	
R 9		CARBON FILM RES ARD25T102J	1KΩ ± 5%.1/4W	1	
R 10		CARBON FILM RES ARD25T104J	100KΩ ± 5%.1/4W	1	
R 11		CARBON FILM RES ARD25T104J	100KΩ ± 5%.1/4W	1	
R 12		VARIABLE RESISTOR RG0485D3M	50KΩ 1/4W	1	
R 13		CARBON FILM RES ARD25T103J	10KΩ ± 5%.1/4W	1	
R 14		CARBON FILM RES ARD25T473J	47KΩ ± 5%.1/4W	1	
R 15		CARBON FILM RES ARD25T474J	470KΩ ± 5%.1/4W	1	
R 16		CARBON FILM RES ARD25T224J	220KΩ ± 5%.1/4W	1	
R 17		VARIABLE RESISTOR RG0485D3M	50KΩ 1/4W	1	
R 18		CARBON FILM RES ARD25T223J	22KΩ ± 5%.1/4W	1	

* : Selected at factory

DRAWING No. 36098026 2/3

No. D073-1988.11

ANRITSU CORP.

Parts List of: A1-A2 SLOPE ADJ

Ref. No.	Part Code	Description	Rating	Qty	Note
R 19		CARBON FILM RES ARD25T473J	47KΩ ± 5%.1/4W	1	
R 20		CARBON FILM RES ARD25T154J	150KΩ ± 5%.1/4W	1	
R 21		CARBON FILM RES ARD25T224J	220KΩ ± 5%.1/4W	1	
R 22		VARIABLE RESISTOR RG0485D3M	50KΩ 1/4W	1	
R 23		CARBON FILM RES ARD25T753J	75KΩ ± 5%.1/4W	1	
R 24		CARBON FILM RES ARD25T104J	100KΩ ± 5%.1/4W	1	
R 25		CARBON FILM RES ARD25T103J	10KΩ ± 5%.1/4W	1	
R 26		CARBON FILM RES ARD25T103J	10KΩ ± 5%.1/4W	1	
R 27		VARIABLE RESISTOR RG0485D3M	50KΩ 1/4W	1	
R 28		CARBON FILM RES ARD25T753J	75KΩ ± 5%.1/4W	1	
R 29		CARBON FILM RES ARD25T104J	100KΩ ± 5%.1/4W	1	
R 30		CARBON FILM RES ARD25T103J	10KΩ ± 5%.1/4W	1	
R 31		CARBON FILM RES ARD25T103J	10KΩ ± 5%.1/4W	1	
R 32		NOT ASSIGNED			

* : Selected at factory

DRAWING No. 36098026 3/3

No. D073-1988.11

ANRITSU CORP.

Parts List of: ME4510B/WJ-01 TX A2 IMD OSC **4**

Ref. No.	Part Code	Description	Rating	Qty	Note
C 1		CER CAP CK732B1H102K	1000p F ± 10%.50V	1	
C 2		CER CAP CK732B1H102K	1000p F ± 10%.50V	1	
C 3		AL ELECTLT CAP CE04C1E101A	100μ F ± 20%.25V	1	
C 4		CER CAP CK732B1H102K	1000p F ± 10%.50V	1	
C 5		CER CAP CK732B1H102K	1000p F ± 10%.50V	1	
C 6		CER CAP CK732B1H102K	1000p F ± 10%.50V	1	
C 7		CER CAP CK732B1H102K	1000p F ± 10%.50V	1	
C 8		AL ELECTLT CAP CE04C1E101A	100μ F ± 20%.25V	1	
C 9		CER CAP CK733B1H104K	0.1μ F ± 10%.50V	1	
C 10		CER CAP CK732B1H102K	1000p F ± 10%.50V	1	
C 11		CER CAP CK732B1H102K	1000p F ± 10%.50V	1	
C 12		CER CAP CK732B1H102K	1000p F ± 10%.50V	1	
C 13		CER CAP CK732B1H102K	1000p F ± 10%.50V	1	
C 14		CER CAP CK732B1H102K	1000p F ± 10%.50V	1	
C 15		CER CAP CK733B1H104K	0.1μ F ± 10%.50V	1	
C 16		CER CAP CK733B1H104K	0.1μ F ± 10%.50V	1	
C 17		CER CAP CK733B1H104K	0.1μ F ± 10%.50V	1	
C 18		CER CAP CK733B1H104K	0.1μ F ± 10%.50V	1	
C 19		NOT ASSIGN			
C 20		CER CAP CK732B1H102K	1000p F ± 10%.50V	1	
C 21		CER CAP CC45CH1H300JY	30p F ± 5%.50V	1	
C 22		CER CAP CC732CJ1H030C	3p F.50V ± 0.25p F	1	
C 23		CER CAP CC732CH1H470J	47p F ± 5%.50V	1	

* : Selected at factory

DRAWING No. 44WR6734 -05 1/36

ANRITSU CORP.

Ref. No.	Part Code	Description	Rating	Qty	Note
C 24		CER CAP CC732CH1H070D	7p F.50V ± 0.5p F	1	
C 25		CER CAP CC732CH1H390J	39p F ± 5%.50V	1	
C 26		CER CAP CC732CH1H180J	18p F ± 5%.50V	1	
C 27		CER CAP CC732CH1H330J	33p F ± 5%.50V	1	
C 28		CER CAP CC924CH1E240J	24p F ± 5%.50V	1	
C 29		CER CAP CC732CH1H180J	18p F ± 5%.50V	1	
C 30		NOT ASSIGN			
C 31		CER CAP CC732CH1H150J	15p F ± 5%.50V	1	
C 32		CER CAP CC732CK1H0R5C	0.5p F.50V ± 0.25p F	1	
C 33		CER CAP CC924CH1E240J	24p F ± 5%.50V	1	
C 34		CER CAP CC732CH1H040D	4p F.50V ± 0.5p F	1	
C 35		CER CAP CC924CH1E200J	20p F ± 5%.50V	1	
C 36		CER CAP CC732CH1H070D	7p F.50V ± 0.5p F	1	
C 37		CER CAP CC732CH1H180J	18p F ± 5%.50V	1	
C 38		CER CAP CC732CH1H120J	12p F ± 5%.50V	1	
C 39		CER CAP CC732CK1H020C	2p F.50V ± 0.25p F	1	
C 40		CER CAP CC732CH1H080D	8p F.50V ± 0.5p F	1	
C 41		NOT ASSIGN			
C 42		NOT ASSIGN			
C 43		NOT ASSIGN			
C 44		CER CAP CK733B1H104K	0.1μ F ± 10%.50V	1	
C 45		CER CAP CK733B1H104K	0.1μ F ± 10%.50V	1	
C 46		CER CAP CK733B1H104K	0.1μ F ± 10%.50V	1	

* : Selected at factory

DRAWING No. 44WR6734 -05 2/36

ANRITSU CORP.

Ref. No.	Part Code	Description	Rating	Qty	Note
C 47		NOT ASSIGN			
C 48		TA ELECTLT CAP	15μ F		
		CS734E1D156M	± 20%.20V	1	
C 49		CER CAP	1000p F		
		CK732B1H102K	± 10%.50V	1	
C 50		CER CAP	0.1μ F		
		CK733B1H104K	± 10%.50V	1	
C 51		CER CAP	1000p F		
		CK732B1H102K	± 10%.50V	1	
C 52		CER CAP	0.1μ F		
		CK733B1H104K	± 10%.50V	1	
C 53		CER CAP	100p F		
		CC732CH1H101J	± 5%.50V	1	
C 54		CER CAP	0.1μ F		
		CK733B1H104K	± 10%.50V	1	
C 55		TA ELECTLT CAP	22μ F		
		CS734E1C226M	± 20%.16V	1	
C 56		CER CAP	0.1μ F		
		CK733B1H104K	± 10%.50V	1	
C 57		CER CAP	1500p F		
		CK732B1H152K	± 10%.50V	1	
C 58		CER CAP	390p F		
		CC732CH1H391J	± 5%.50V	1	
C 59		CER CAP	0.01μ F		
		CK732B1H103K	± 10%.50V	1	
C 60		CER CAP	0.01μ F		
		CK732B1H103K	± 10%.50V	1	
C 61		CER CAP	390p F		
		CC732CH1H391J	± 5%.50V	1	
C 62		CER CAP	1500p F		
		CK732B1H152K	± 10%.50V	1	
C 63		CER CAP	0.1μ F		
		CK733B1H104K	± 10%.50V	1	
C 64		CER CAP	0.1μ F		
		CK733B1H104K	± 10%.50V	1	
C 65		CER CAP	0.1μ F		
		CK733B1H104K	± 10%.50V	1	
C 66		CER CAP	1000p F		
		CK732B1H102K	± 10%.50V	1	
C 67		CER CAP	1000p F		
		CK732B1H102K	± 10%.50V	1	
C 68		CER CAP	0.22μ F		
C 69		CK737B1H224K	± 10%.50V	1	
		PLSTC FILM CAP	1μ F		
		ECQ-V1H105JF	± 5%.50V	1	

* : Selected at factory

Drawing No. 44WR6734 -06 3/36

ANRITSU CORP.

Ref. No.	Part Code	Description	Rating	Qty	Note
C 70		AL ELECTLT CAP	220μ F		
		CE04C1E221A	± 20%.25V	1	
C 71		CER CAP	1000p F		
		CK732B1H102K	± 10%.50V	1	
C 72		CER CAP	1000p F		
		CK732B1H102K	± 10%.50V	1	
C 73		CER CAP	1000p F		
		CK732B1H102K	± 10%.50V	1	
C 74		CER CAP	1000p F		
		CK732B1H102K	± 10%.50V	1	
C 75		CER CAP	1000p F		
		CK732B1H102K	± 10%.50V	1	
C 76		CER CAP	1000p F		
		CK732B1H102K	± 10%.50V	1	
C 77		CER CAP	1000p F		
		CK732B1H102K	± 10%.50V	1	
C 78		CER CAP	1000p F		
		CK732B1H102K	± 10%.50V	1	
C 79		NOT ASSIGN			
C 80		NOT ASSIGN			
C 81		CER CAP	1000p F		
		CK732B1H102K	± 10%.50V	1	
C 82		CER CAP	1000p F		
		CK732B1H102K	± 10%.50V	1	
C 83		AL ELECTLT CAP	100μ F		
		CE04C1E101A	± 20%.25V	1	
C 84		CER CAP	1000p F		
		CK732B1H102K	± 10%.50V	1	
C 85		CER CAP	1000p F		
		CK732B1H102K	± 10%.50V	1	
C 86		CER CAP	1000p F		
		CK732B1H102K	± 10%.50V	1	
C 87		CER CAP	1000p F		
		CK732B1H102K	± 10%.50V	1	
C 88		AL ELECTLT CAP	100μ F		
		CE04C1E101A	± 20%.25V	1	
C 89		CER CAP	0.1μ F		
		CK733B1E104K	± 10%.50V	1	
C 90		CER CAP	1000p F		
		CK732B1H102K	± 10%.50V	1	
C 91		CER CAP	1000p F		
		CK732B1H102K	± 10%.50V	1	
C 92		CER CAP	1000p F		
		CK732B1H102K	± 10%.50V	1	

* : Selected at factory

Drawing No. 44WR6734 -06 4/36

ANRITSU CORP.

Ref. No.	Part Code	Description	Rating	Qty	Note
C 93		CER CAP	1000p F		
		CK732B1H102K	± 10%.50V	1	
C 94		CER CAP	1000p F		
		CK732B1H102K	± 10%.50V	1	
C 95		CER CAP	0.1μ F		
		CK733B1H104K	± 10%.50V	1	
C 96		CER CAP	0.1μ F		
		CK733B1H104K	± 10%.50V	1	
C 97		CER CAP	0.1μ F		
		CK733B1H104K	± 10%.50V	1	
C 98		CER CAP	0.1μ F		
		CK733B1H104K	± 10%.50V	1	
C 99		NOT ASSIGN			
C 100		CER CAP	1000p F		
		CK732B1H102K	± 10%.50V	1	
C 101		CER CAP	30p F		
		CC45CH1H300JY	± 5%.50V	1	
C 102		CER CAP	3p F.50V		
		CC732CJ1H030C	± 0.25p F	1	
C 103		CER CAP	47p F		
		CC732CH1H470J	± 5%.50V	1	
C 104		CER CAP	7p F.50V		
		CC732CH1H070D	± 0.5p F	1	
C 105		CER CAP	39p F		
		CC732CH1H390J	± 5%.50V	1	
C 106		CER CAP	18p F		
		CC732CH1H180J	± 5%.50V	1	
C 107		CER CAP	33p F		
		CC732CH1H330J	± 5%.50V	1	
C 108		CER CAP	24p F		
		CC924CH1E240J	± 5%.50V	1	
C 109		CER CAP	18p F		
		CC732CH1H180J	± 5%.50V	1	
C 110		NOT ASSIGN			
C 111		CER CAP	15p F		
		CC732CH1H150J	± 5%.50V	1	
C 112		CER CAP	0.5p F.50V		
		CC732CK1H0R5C	± 0.25p F	1	
C 113		CER CAP	24p F		
		CC924CH1E240J	± 5%.50V	1	
C 114		CER CAP	4p F.50V		
		CC732CH1H040D	± 0.5p F	1	
C 115		CER CAP	20p F		
		CC924CH1E200J	± 5%.50V	1	

* : Selected at factory

Drawing No. 44WR6734 -06 5/36

ANRITSU CORP.

Ref. No.	Part Code	Description	Rating	Qty	Note
C 116		CER CAP	7p F.50V		
		CC732CH1H070D	± 0.5p F	1	
C 117		CER CAP	18p F		
		CC732CH1H180J	± 5%.50V	1	
C 118		CER CAP	12p F		
		CC732CH1H120J	± 5%.50V	1	
C 119		CER CAP	2p F.50V		
		CC732CK1H020C	± 0.25p F	1	
C 120		CER CAP	8p F.50V		
		CC732CH1H080D	± 0.5p F	1	
C 121		NOT ASSIGN			
C 122		NOT ASSIGN			
C 123		NOT ASSIGN			
C 124		CER CAP	0.1μ F		
		CK733B1H104K	± 10%.50V	1	
C 125		CER CAP	0.1μ F		
		CK733B1H104K	± 10%.50V	1	
C 126		CER CAP	0.1μ F		
		CK733B1H104K	± 10%.50V	1	
C 127		NOT ASSIGN			
C 128		TA ELECTLT CAP	15μ F		
		CS734E1D156M	± 20%.20V	1	
C 129		CER CAP	1000p F		
		CK732B1H102K	± 10%.50V	1	
C 130		CER CAP	0.1μ F		
		CK733B1H104K	± 10%.50V	1	
C 131		CER CAP	1000p F		
		CK732B1H102K	± 10%.50V	1	
C 132		CER CAP	0.1μ F		
		CK733B1H104K	± 10%.50V	1	
C 133		CER CAP	100p F		
		CC732CH1H101J	± 5%.50V	1	
C 134		CER CAP	0.1μ F		
		CK733B1H104K	± 10%.50V	1	
C 135		TA ELECTLT CAP	22μ F		
		CS734E1C226M	± 20%.16V	1	
C 136		CER CAP	0.1μ F		
		CK733B1H104K	± 10%.50V	1	
C 137		CER CAP	1500p F		
		CK732B1H152K	± 10%.50V	1	
C 138		CER CAP	390p F		
		CC732CH1H391J	± 5%.50V	1	

* : Selected at factory

Drawing No. 44WR6734 -06 6/36

ANRITSU CORP.

Ref. No.	Part Code	Description	Rating	Qty	Note
C 139		CER CAP	0.01μ F		
		CK732B1H103K	± 10%.50V	1	
C 140		CER CAP	0.01μ F		
		CK732B1H103K	± 10%.50V	1	
C 141		CER CAP	390p F		
		CC732CH1H391J	± 5%.50V	1	
C 142		CER CAP	1500p F		
		CK732B1H152K	± 10%.50V	1	
C 143		CER CAP	0.1μ F		
		CK733B1H104K	± 10%.50V	1	
C 144		CER CAP	0.1μ F		
		CK733B1H104K	± 10%.50V	1	
C 145		CER CAP	0.1μ F		
		CK733B1H104K	± 10%.50V	1	
C 146		CER CAP	1000p F		
		CK732B1H102K	± 10%.50V	1	
C 147		CER CAP	1000p F		
		CK732B1H102K	± 10%.50V	1	
C 148		CER CAP	0.22μ F		
		CK737B1H224K	± 10%.50V	1	
C 149		PLSTC FILM CAP	1μ F		
		ECQ-V1H105JW	± 5%.50V	1	
C 150		AL ELECTLT CAP	220μ F		
		CE04C1E221A	± 20%.25V	1	
C 151		CER CAP	1000p F		
		CK732B1H102K	± 10%.50V	1	
C 152		CER CAP	1000p F		
		CK732B1H102K	± 10%.50V	1	
C 153		CER CAP	1000p F		
		CK732B1H102K	± 10%.50V	1	
C 154		CER CAP	1000p F		
		CK732B1H102K	± 10%.50V	1	
C 155		CER CAP	1000p F		
		CK732B1H102K	± 10%.50V	1	
C 156		CER CAP	1000p F		
		CK732B1H102K	± 10%.50V	1	
C 157		CER CAP	1000p F		
		CK732B1H102K	± 10%.50V	1	
C 158		CER CAP	1000p F		
		CK732B1H102K	± 10%.50V	1	
C 159		NOT ASSIGN			
C 160		NOT ASSIGN			
C 161		CER CAP	1000p F		
		CK732B1H102K	± 10%.50V	1	

ANRITSU CORP.

Ref. No.	Part Code	Description	Rating	Qty	Note
C 162		CER CAP	1000p F		
		CK732B1H102K	± 10%.50V	1	
C 163		AL ELECTLT CAP	100μ F		
		CE04C1E101A	± 20%.25V	1	
C 164		CER CAP	1000p F		
		CK732B1H102K	± 10%.50V	1	
C 165		CER CAP	1000p F		
		CK732B1H102K	± 10%.50V	1	
C 166		CER CAP	1000p F		
		CK732B1H102K	± 10%.50V	1	
C 167		CER CAP	1000p F		
		CK732B1H102K	± 10%.50V	1	
C 168		AL ELECTLT CAP	100μ F		
		CE04C1E101A	± 20%.25V	1	
C 169		CER CAP	0.1μ F		
		CK733B1H104K	± 10%.50V	1	
C 170		CER CAP	1000p F		
		CK732B1H102K	± 10%.50V	1	
C 171		CER CAP	1000p F		
		CK732B1H102K	± 10%.50V	1	
C 172		CER CAP	1000p F		
		CK732B1H102K	± 10%.50V	1	
C 173		CER CAP	1000p F		
		CK732B1H102K	± 10%.50V	1	
C 174		CER CAP	1000p F		
		CK732B1H102K	± 10%.50V	1	
C 175		CER CAP	0.1μ F		
		CK733B1H104K	± 10%.50V	1	
C 176		CER CAP	0.1μ F		
		CK733B1H104K	± 10%.50V	1	
C 177		CER CAP	0.1μ F		
		CK733B1H104K	± 10%.50V	1	
C 178		CER CAP	0.1μ F		
		CK733B1H104K	± 10%.50V	1	
C 179		NOT ASSIGN			
C 180		CER CAP	1000p F		
		CK732B1H102K	± 10%.50V	1	
C 181		CER CAP	30p F		
		CC45CH1H300JY	± 5%.50V	1	
C 182		CER CAP	3p F.50V		
		CC732CJ1H030C	± 0.25p F	1	
C 183		CER CAP	47p F		
		CC732CH1H470J	± 5%.50V	1	
C 184		CER CAP	7p F.50V		
		CC732CH1H070D	± 0.5p F	1	

ANRITSU CORP.

Ref. No.	Part Code	Description	Rating	Qty	Note
C 185		CER CAP	39p F		
		CC732CH1H390J	± 5%.50V	1	
C 186		CER CAP	18p F		
		CC732CH1H180J	± 5%.50V	1	
C 187		CER CAP	33p F		
		CC732CH1H330J	± 5%.50V	1	
C 188		CER CAP	24p F		
		CC924CH1H240J	± 5%.50V	1	
C 189		CER CAP	18p F		
		CC732CH1H180J	± 5%.50V	1	
C 190		NOT ASSIGN			
C 191		CER CAP	15p F		
		CC732CH1H150J	± 5%.50V	1	
C 192		CER CAP	0.5p F.50V		
		CC732CK1H0R5C	± 0.25p F	1	
C 193		CER CAP	24p F		
		CC924CH1H240J	± 5%.50V	1	
C 194		CER CAP	4p F.50V		
		CC732CH1H040D	± 0.5p F	1	
C 195		CER CAP	20p F		
		CC924CH1H200J	± 5%.50V	1	
C 196		CER CAP	7p F.50V		
		CC732CH1H070D	± 0.5p F	1	
C 197		CER CAP	18p F		
		CC732CH1H180J	± 5%.50V	1	
C 198		CER CAP	12p F		
		CC732CH1H120J	± 5%.50V	1	
C 199		CER CAP	2p F.50V		
		CC732CK1H020C	± 0.25p F	1	
C 200		CER CAP	8p F.50V		
		CC732CH1H080D	± 0.5p F	1	
C 201		NOT ASSIGN			
C 202		NOT ASSIGN			
C 203		NOT ASSIGN			
C 204		CER CAP	0.1μ F		
		CK733B1H104K	± 10%.50V	1	
C 205		CER CAP	0.1μ F		
		CK733B1H104K	± 10%.50V	1	
C 206		CER CAP	0.1μ F		
		CK733B1H104K	± 10%.50V	1	
C 207		NOT ASSIGN			

ANRITSU CORP.

Ref. No.	Part Code	Description	Rating	Qty	Note
C 208		TA ELECTLT CAP	15μ F		
		CS734E1D156M	± 20%.20V	1	
C 209		CER CAP	1000p F		
		CK732B1H102K	± 10%.50V	1	
C 210		CER CAP	0.1μ F		
		CK733B1H104K	± 10%.50V	1	
C 211		CER CAP	1000p F		
		CK732B1H102K	± 10%.50V	1	
C 212		CER CAP	0.1μ F		
		CK733B1H104K	± 10%.50V	1	
C 213		CER CAP	100p F		
		CC732CH1H101J	± 5%.50V	1	
C 214		CER CAP	0.1μ F		
		CK733B1H104K	± 10%.50V	1	
C 215		TA ELECTLT CAP	22μ F		
		CS734E1C226M	± 20%.16V	1	
C 216		CER CAP	0.1μ F		
		CK733B1H104K	± 10%.50V	1	
C 217		CER CAP	1500p F		
		CK732B1H152K	± 10%.50V	1	
C 218		CER CAP	390p F		
		CC732CH1H391J	± 5%.50V	1	
C 219		CER CAP	0.01μ F		
		CK732B1H103K	± 10%.50V	1	
C 220		CER CAP	0.01μ F		
		CK732B1H103K	± 10%.50V	1	
C 221		CER CAP	390p F		
		CC732CH1H391J	± 5%.50V	1	
C 222		CER CAP	1500p F		
		CK732B1H152K	± 10%.50V	1	
C 223		CER CAP	0.1μ F		
		CK733B1H104K	± 10%.50V	1	
C 224		CER CAP	0.1μ F		
		CK733B1H104K	± 10%.50V	1	
C 225		CER CAP	0.1μ F		
		CK733B1H104K	± 10%.50V	1	
C 226		CER CAP	1000p F		
		CK732B1H102K	± 10%.50V	1	
C 227		CER CAP	1000p F		
		CK732B1H102K	± 10%.50V	1	
C 228		CER CAP	0.22μ F		
		CK737B1H224K	± 10%.50V	1	
C 229		PLSTC FILM CAP	1μ F		
		ECQ-V1H105JW	± 5%.50V	1	
C 230		AL ELECTLT CAP	220μ F		
		CE04C1E221A	± 20%.25V	1	

ANRITSU CORP.

Ref. No.	Part Code	Description	Rating	Qty	Note
C 231		CER CAP	1000 p F		
		CK732B1H102K	± 10%.50V	1	
C 232		CER CAP	1000 p F		
		CK732B1H102K	± 10%.50V	1	
C 233		CER CAP	1000 p F		
		CK732B1H102K	± 10%.50V	1	
C 234		CER CAP	1000 p F		
		CK732B1H102K	± 10%.50V	1	
C 235		CER CAP	1000 p F		
		CK732B1H102K	± 10%.50V	1	
C 236		CER CAP	1000 p F		
		CK732B1H102K	± 10%.50V	1	
C 237		CER CAP	1000 p F		
		CK732B1H102K	± 10%.50V	1	
C 238		CER CAP	1000 p F		
		CK732B1H102K	± 10%.50V	1	
C 239		NOT ASSIGN			
C 240		NOT ASSIGN			
C 241		NOT ASSIGN			
C 242		CER CAP	2200 p F		
		CK732B1H222K	± 10%.50V	1	
C 243		AL ELECTLT CAP	33 μ F		
		CE04C1V330A	± 20%.35V	1	
C 244		CER CAP	0.1 μ F		
		CK733B1H104K	± 10%.50V	1	
C 245		AL ELECTLT CAP	22 μ F		
		CE04C1H220A	± 20%.50V	1	
C 246		AL ELECTLT CAP	22 μ F		
		CE04C1H220A	± 20%.50V	1	
C 247		AL ELECTLT CAP	22 μ F		
		CE04C1H220A	± 20%.50V	1	
C 248		CER CAP	0.1 μ F		
		CK733B1H104K	± 10%.50V	1	
C 249		CER CAP	0.1 μ F		
		CK733B1H104K	± 10%.50V	1	
C 250		CER CAP	0.1 μ F		
		CK733B1H104K	± 10%.50V	1	
C 251		CER CAP	1000 p F		
		CK732B1H102K	± 10%.50V	1	
C 252		CER CAP	1000 p F		
		CK732B1H102K	± 10%.50V	1	
C 253		AL ELECTLT CAP	100 μ F		
		CE04C1E101A	± 20%.25V	1	

Rev. No./Date

* : Selected at factory

Drawing No. 44W86734 -06

11/36

ANRITSU CORP.

Ref. No.	Part Code	Description	Rating	Qty	Note
C 254		CER CAP	1000 p F		
		CK732B1H102K	± 10%.50V	1	
C 255		CER CAP	1000 p F		
		CK732B1H102K	± 10%.50V	1	
C 256		CER CAP	1000 p F		
		CK732B1H102K	± 10%.50V	1	
C 257		CER CAP	1000 p F		
		CK732B1H102K	± 10%.50V	1	
C 258			100 μ F		
		CE04C1E101A	± 20%.25V	1	
C 259		CER CAP	0.1 μ F		
		CK733B1H104K	± 10%.50V	1	
C 260		CER CAP	1000 p F		
		CK732B1H102K	± 10%.50V	1	
C 261		CER CAP	1000 p F		
		CK732B1H102K	± 10%.50V	1	
C 262		CER CAP	1000 p F		
		CK732B1H102K	± 10%.50V	1	
C 263		CER CAP	1000 p F		
		CK732B1H102K	± 10%.50V	1	
C 264		CER CAP	1000 p F		
		CK732B1H102K	± 10%.50V	1	
C 265		CER CAP	0.1 μ F		
		CK733B1H104K	± 10%.50V	1	
C 266		CER CAP	0.1 μ F		
		CK733B1H104K	± 10%.50V	1	
C 267		CER CAP	0.1 μ F		
		CK733B1H104K	± 10%.50V	1	
C 268		CER CAP	0.1 μ F		
		CK733B1H104K	± 10%.50V	1	
C 269		NOT ASSIGN			
C 270		CER CAP	1000 p F		
		CK732B1H102K	± 10%.50V	1	
C 271		CER CAP	30 p F		
		CC45CH1H300JY	± 5%.50V	1	
C 272		CER CAP	3 p F.50V		
		CC732CJ1H030C	± 0.25 p F	1	
C 273		CER CAP	47 p F		
		CC732CH1H470J	± 5%.50V	1	
C 274		CER CAP	7 p F.50V		
		CC732CH1H070D	± 0.5 p F	1	
C 275		CER CAP	39 p F		
		CC732CH1H390J	± 5%.50V	1	
C 276		CER CAP	18 p F		
		CC732CH1H180J	± 5%.50V	1	

Rev. No./Date

* : Selected at factory

Drawing No. 44W86734 -06

12/36

ANRITSU CORP.

Ref. No.	Part Code	Description	Rating	Qty	Note
C 277		CER CAP	33 p F		
		CC732CH1H330J	± 5%.50V	1	
C 278		CER CAP	24 p F		
		CC924CH1E240J	± 5%.50V	1	
C 279		CER CAP	18 p F		
		CC732CH1H180J	± 5%.50V	1	
C 280		NOT ASSIGN			
C 281		CER CAP	15 p F		
		CC732CH1H150J	± 5%.50V	1	
C 282		CER CAP	0.5 p F.50V		
		CC732CK1H0R5C	± 0.25 p F	1	
C 283		CER CAP	24 p F		
		CC924CH1E240J	± 5%.50V	1	
C 284		CER CAP	4 p F.50V		
		CC732CH1H040D	± 0.5 p F	1	
C 285		CER CAP	20 p F		
		CC924CH1E200J	± 5%.50V	1	
C 286		CER CAP	7 p F.50V		
		CC732CH1H070D	± 0.5 p F	1	
C 287		CER CAP	18 p F		
		CC732CH1H180J	± 5%.50V	1	
C 288		CER CAP	12 p F		
		CC732CH1H120J	± 5%.50V	1	
C 289		CER CAP	2 p F.50V		
		CC732CK1H020C	± 0.25 p F	1	
C 290	2387-02959	CER CAP	8 p F.50V		
		CC732CH1H080D	± 0.5 p F	1	
C 291		NOT ASSIGN			
C 292		NOT ASSIGN			
C 293		NOT ASSIGN			
C 294		CER CAP	0.1 μ F.50V		
		CK733F1H104Z	+80/-20%	1	
C 295		CER CAP	0.1 μ F.50V		
		CK733F1H104Z	+80/-20%	1	
C 296		CER CAP	0.1 μ F.50V		
		CK733F1H104Z	+80/-20%	1	
C 297		NOT ASSIGN			
C 298		TA ELECTLT CAP	15 μ F		
		CS734E1D156M	± 20%.20V	1	
C 299		CER CAP	1000 p F		
		CK732B1H102K	± 10%.50V	1	

Rev. No./Date

* : Selected at factory

Drawing No. 44W86734 -06

13/36

ANRITSU CORP.

Ref. No.	Part Code	Description	Rating	Qty	Note
C 300		CER CAP	0.1 μ F		
		CK733B1H104K	± 10%.50V	1	
C 301		CER CAP	1000 p F		
		CK732B1H102K	± 10%.50V	1	
C 302		CER CAP	0.1 μ F		
		CK733B1H104K	± 10%.50V	1	
C 303		CER CAP	100 p F		
		CC732CH1H101J	± 5%.50V	1	
C 304		CER CAP	0.1 μ F		
		CK733B1H104K	± 10%.50V	1	
C 305		TA ELECTLT CAP	22 μ F		
		CS734E1C226M	± 20%.16V	1	
C 306		CER CAP	0.1 μ F		
		CK733B1H104K	± 10%.50V	1	
C 307		CER CAP	1500 p F		
		CK732B1H152K	± 10%.50V	1	
C 308		CER CAP	390 p F		
		CC732CH1H391J	± 5%.50V	1	
C 309		CER CAP	0.01 μ F		
		CK732B1H103K	± 10%.50V	1	
C 310		CER CAP	0.01 μ F		
		CK732B1H103K	± 10%.50V	1	
C 311		CER CAP	390 p F		
		CC732CH1H391J	± 5%.50V	1	
C 312		CER CAP	1500 p F		
		CK732B1H152K	± 10%.50V	1	
C 313		CER CAP	0.1 μ F		
		CK733B1H104K	± 10%.50V	1	
C 314		CER CAP	0.1 μ F		
		CK733B1H104K	± 10%.50V	1	
C 315		CER CAP	0.1 μ F		
		CK733B1H104K	± 10%.50V	1	
C 316		CER CAP	1000 p F		
		CK732B1H102K	± 10%.50V	1	
C 317		CER CAP	1000 p F		
		CK732B1H102K	± 10%.50V	1	
C 318		CER CAP	0.22 μ F		
		CK737B1H224K	± 10%.50V	1	
C 319		PLSTC FILM CAP	1 μ F		
		ECQ-V1H105JW	± 5%.50V	1	
C 320		AL ELECTLT CAP	220 μ F		
		CE04C1E221A	± 20%.25V	1	
C 321		CER CAP	1000 p F		
		CK732B1H102K	± 10%.50V	1	
C 322		CER CAP	1000 p F		
		CK732B1H102K	± 10%.50V	1	

Rev. No./Date

* : Selected at factory

Drawing No. 44W86734 -06

14/36

ANRITSU CORP.

Ref. No.	Part Code	Description	Rating	Qty	Note
C 323		CER CAP	1000p F		
		CK732B1H102K	± 10%.50V	1	
C 324		CER CAP	1000p F		
		CK732B1H102K	± 10%.50V	1	
C 325		CER CAP	1000p F		
		CK732B1H102K	± 10%.50V	1	
C 326		CER CAP	1000p F		
		CK732B1H102K	± 10%.50V	1	
C 327		CER CAP	1000p F		
		CK732B1H102K	± 10%.50V	1	
C 328		CER CAP	1000p F		
		CK732B1H102K	± 10%.50V	1	
C 329		CER CAP	0.1μ F		
		CK733B1H104K	± 10%.50V	1	
C 330		CER CAP	0.1μ F		
		CK733B1H104K	± 10%.50V	1	
C 331		NOT ASSIGN			
C 332		NOT ASSIGN			
C 333		CER CAP	0.1μ F		
		CK733B1H104K	± 10%.50V	1	
C 334		CER CAP	0.1μ F		
		CK733B1H104K	± 10%.50V	1	
C 335		NOT ASSIGN			
C 336		NOT ASSIGN			
C 337		CER CAP	0.1μ F		
		CK733B1H104K	± 10%.50V	1	
C 338		CER CAP	0.1μ F		
		CK733B1H104K	± 10%.50V	1	
C 339		NOT ASSIGN			
C 340		NOT ASSIGN			
C 341		CER CAP	0.1μ F		
		CK733B1H104K	± 10%.50V	1	
C 342		CER CAP	0.1μ F		
		CK733B1H104K	± 10%.50V	1	
C 343		CER CAP	1p F.50V		
		CC732CK1H010C	± 0.25p F	1	
C 344		CER CAP	1p F.50V		
		CC732CK1H010C	± 0.25p F	1	
C 345		CER CAP	1p F.50V		
		CC732CK1H010C	± 0.25p F	1	

ANRITSU CORP.

Ref. No.	Part Code	Description	Rating	Qty	Note
C 346		CER CAP	1p F.50V		
		CC732CK1H010C	± 0.25p F	1	
J 1		PLUG	60P		
		FRC5-C60S52T-0L		1	
J 2		27CP-R-PC		1	
K 1		G5Y-1 DC12V		1	
K 2		G5Y-1 DC12V		1	
K 3		G5Y-1 DC12V		1	
K 4		NOT ASSIGN			
K 5		G5Y-1 DC12V		1	
K 6		G5Y-1 DC12V		1	
K 7		G5Y-1 DC12V		1	
K 8		G5Y-1 DC12V		1	
K 9		G5Y-1 DC12V		1	
L 1		INDUCTOR	0.68μ H± 10%		
		NL322522-R68K		1	
L 2		INDUCTOR	2.2μ H.± 10%		
		NL453232-2R2K		1	
L 3		INDUCTOR	2.2μ H.± 10%		
		NL453232-2R2K		1	
L 4		INDUCTOR	3.3μ H.± 10%		
		NL453232-3R3K		1	
L 5		INDUCTOR	4.7μ H.± 10%		
		NL453232-4R7K		1	
L 6		INDUCTOR	0.15μ H± 10%		
		NL322522-R15K		1	
L 7		INDUCTOR			
		34L74432B		1	

ANRITSU CORP.

Ref. No.	Part Code	Description	Rating	Qty	Note
L 8		NOT ASSIGN			
L 9		NOT ASSIGN			
L 10		NOT ASSIGN			
L 11		INDUCTOR			
		34L74433F		1	
L 12		INDUCTOR			
		34L74433F		1	
L 13		INDUCTOR			
		34L74432F		1	
L 14		INDUCTOR			
		34L74431F		1	
L 15		INDUCTOR			
		34L74433D		1	
L 16		INDUCTOR			
		34L74431N		1	
L 17		INDUCTOR			
		34L74432D		1	
L 18		INDUCTOR			
		34L74430N		1	
L 19		INDUCTOR	22μ H.± 10%		
		NL453232-220K		1	
L 20		INDUCTOR	220μ H.± 10%		
		NL453232-221K		1	
L 21		INDUCTOR	0.68μ H± 10%		
		NL322522-R68K		1	
L 22		INDUCTOR	2.2μ H.± 10%		
		NL453232-2R2K		1	
L 23		INDUCTOR	2.2μ H.± 10%		
		NL453232-2R2K		1	
L 24		INDUCTOR	3.3μ H.± 10%		
		NL453232-3R3K		1	
L 25		INDUCTOR	4.7μ H.± 10%		
		NL453232-4R7K		1	
L 26		INDUCTOR	0.15μ H± 10%		
		NL322522-R15K		1	
L 27		INDUCTOR			
		34L74432B		1	
L 28		NOT ASSIGN			
L 29		NOT ASSIGN			
L 30		NOT ASSIGN			

ANRITSU CORP.

Ref. No.	Part Code	Description	Rating	Qty	Note
L 31		INDUCTOR			
		34L74433F		1	
L 32		INDUCTOR			
		34L74433F		1	
L 33		INDUCTOR			
		34L74432F		1	
L 34		INDUCTOR			
		34L74431F		1	
L 35		INDUCTOR			
		34L74433D		1	
L 36		INDUCTOR			
		34L74431N		1	
L 37		INDUCTOR			
		34L74432D		1	
L 38		INDUCTOR			
		34L74430N		1	
L 39		INDUCTOR	22μ H.± 10%		
		NL453232-220K		1	
L 40		INDUCTOR	220μ H.± 10%		
		NL453232-221K		1	
L 41		INDUCTOR	0.68μ H± 10%		
		NL322522-R68K		1	
L 42		INDUCTOR	2.2μ H.± 10%		
		NL453232-2R2K		1	
L 43		INDUCTOR	2.2μ H.± 10%		
		NL453232-2R2K		1	
L 44		INDUCTOR	3.3μ H.± 10%		
		NL453232-3R3K		1	
L 45		INDUCTOR	4.7μ H.± 10%		
		NL453232-4R7K		1	
L 46		INDUCTOR	0.15μ H± 10%		
		NL322522-R15K		1	
L 47		INDUCTOR			
		34L74432B		1	
L 48		NOT ASSIGN			
L 49		NOT ASSIGN			
L 50		NOT ASSIGN			
L 51		INDUCTOR			
		34L74433F		1	
L 52		INDUCTOR			
		34L74433F		1	
L 53		INDUCTOR			
		34L74432F		1	

ANRITSU CORP.

Ref. No.	Part Code	Description	Rating	Qty	Note
L 54		INDUCTOR 34L74431F		1	
L 55		INDUCTOR 34L74433D		1	
L 56		INDUCTOR 34L74431N		1	
L 57		INDUCTOR 34L74432D		1	
L 58		INDUCTOR 34L74430N		1	
L 59		INDUCTOR NL453232-220K	22μ H.± 10%	1	
L 60		INDUCTOR NL453232-221K	220μ H.± 10%	1	
L 61		INDUCTOR SP0408-3R3K	3.3μ H.± 10%	1	
L 62		INDUCTOR NL453232-220K	22μ H.± 10%	1	
L 63		INDUCTOR NL453232-4R7K	4.7μ H.± 10%	1	
L 64		NOT ASSIGN			
L 65		NOT ASSIGN			
L 66		NOT ASSIGN			
L 67		NOT ASSIGN			
L 68		NOT ASSIGN			
L 69		NOT ASSIGN			
L 70		NOT ASSIGN			
L 71		INDUCTOR NL322522-R68K	0.68μ H± 10%	1	
L 72		INDUCTOR NL453232-2R2K	2.2μ H.± 10%	1	
L 73		INDUCTOR NL453232-2R2K	2.2μ H.± 10%	1	
L 74		INDUCTOR NL453232-3R3K	3.3μ H.± 10%	1	
L 75		INDUCTOR NL453232-4R7K	4.7μ H.± 10%	1	
L 76		INDUCTOR NL322522-R15K	0.15μ H± 10%	1	

* Selected at factory

© TEC 1993.07

ANRITSU CORP.

Ref. No.	Part Code	Description	Rating	Qty	Note
L 77		INDUCTOR 34L74432B		1	
L 78		NOT ASSIGN			
L 79		NOT ASSIGN			
L 80		NOT ASSIGN			
L 81		INDUCTOR 34L74433F		1	
L 82		INDUCTOR 34L74433F		1	
L 83		INDUCTOR 34L74432F		1	
L 84		INDUCTOR 34L74431F		1	
L 85		INDUCTOR 34L74433D		1	
L 86		INDUCTOR 34L74431N		1	
L 87		INDUCTOR 34L74432D		1	
L 88		INDUCTOR 34L74430N		1	
L 89		INDUCTOR NL453232-220K	22μ H.± 10%	1	
L 90		INDUCTOR NL453232-221K	220μ H.± 10%	1	
M 1		NOT ASSIGN			
Q 1		2SC2758 (U16 OR U1		1	
Q 2		2SC2351		1	
Q 3		FC54M		1	
Q 4		IC μ PC1656C		1	
Q 5		DIODE 1SV34		1	

* Selected at factory

© TEC 1993.07

ANRITSU CORP.

Ref. No.	Part Code	Description	Rating	Qty	Note
Q 6		IC μ PC1654A		1	
Q 7		TRANSISTOR 2SC1252		1	
Q 8		DIODE 1SS99		1	
Q 9		2SC1623		1	
Q 10		DIODE 1S2835		1	
Q 11		IC μ PC1651G		1	
Q 12		NOT ASSIGN			
Q 13		NOT ASSIGN			
Q 14		MT19		1	
Q 15		μ PB597CX		1	
Q 16		μ PD2833C		1	
Q 17		2SC1622A (D16 OR D		1	
Q 18		2SC1622A (D16 OR D		1	
Q 19		μ PC258G		1	
Q 20		DIODE 1SS123		1	
Q 21		NOT ASSIGN			
Q 22		NOT ASSIGN			
Q 23		NOT ASSIGN			
Q 24		IC 74HC374		1	
Q 25		μ PD7011C		1	
Q 26		μ PC251G2		1	
Q 27		LM833M		1	
Q 28		DIODE 1SS99		1	

* Selected at factory

© TEC 1993.07

ANRITSU CORP.

Ref. No.	Part Code	Description	Rating	Qty	Note
Q 29		NOT ASSIGN			
Q 30		NOT ASSIGN			
Q 31		2SC2758 (U16 OR U1		1	
Q 32		2SC2351		1	
Q 33		FC54M		1	
Q 34		IC μ PC1656C		1	
Q 35		DIODE 1SV34		1	
Q 36		IC μ PC1654A		1	
Q 37		TRANSISTOR 2SC1252		1	
Q 38		DIODE 1SS99		1	
Q 39		2SC1623		1	
Q 40		DIODE 1S2835		1	
Q 41		IC μ PC1651G		1	
Q 42		NOT ASSIGN			
Q 43		NOT ASSIGN			
Q 44		MT19		1	
Q 45		μ PB597CX		1	
Q 46		μ PD2833C		1	
Q 47		2SC1622A (D16 OR D		1	
Q 48		2SC1622A (D16 OR D		1	
Q 49		μ PC258G		1	
Q 50		DIODE 1SS123		1	
Q 51		NOT ASSIGN			

* Selected at factory

© TEC 1993.07

ANRITSU CORP.

Ref. No.	Part Code	Description	Rating	Qty	Note
Q 52		NOT ASSIGN			
Q 53		NOT ASSIGN			
Q 54		IC 74HC374		1	
Q 55		μ PD7011C		1	
Q 56		μ PC251G2		1	
Q 57		LM833M		1	
Q 58		DIODE 1SS99		1	
Q 59		NOT ASSIGN			
Q 60		NOT ASSIGN			
Q 61		2SC2758 (U16 OR U1		1	
Q 62		2SC2351		1	
Q 63		FC54M		1	
Q 64		IC μ PC1656C		1	
Q 65		DIODE 1SV34		1	
Q 66		IC μ PC1654A		1	
Q 67		TRANSISTOR 2SC1252		1	
Q 68		DIODE 1SS99		1	
Q 69		2SC1623		1	
Q 70		DIODE 1S2835		1	
Q 71		IC μ PC1651G		1	
Q 72		NOT ASSIGN			
Q 73		NOT ASSIGN			
Q 74		MT19		1	

* Selected at factory

© TEC 1993 07

ANRITSU CORP.

Ref. No.	Part Code	Description	Rating	Qty	Note
Q 75		μ PB597CX		1	
Q 76		μ PD2833C		1	
Q 77		2SC1622A (D16 OR D		1	
Q 78		2SC1622A (D16 OR D		1	
Q 79		μ PC258G		1	
Q 80		DIODE 1SS123		1	
Q 81		NOT ASSIGN			
Q 82		NOT ASSIGN			
Q 83		NOT ASSIGN			
Q 84		IC 74HC374		1	
Q 85		μ PD7011C		1	
Q 86		μ PC251G2		1	
Q 87		LM833M		1	
Q 88		DIODE 1SS99		1	
Q 89		NOT ASSIGN			
Q 90		NOT ASSIGN			
Q 91		NOT ASSIGN			
Q 92		NOT ASSIGN			
Q 93		NJM79L09A		1	
Q 94		μ PC78L05J		1	
Q 95		LMC13204N		1	
Q 96		IC 74HC154		1	
Q 97		NOT ASSIGN			

* Selected at factory

© TEC 1993 07

ANRITSU CORP.

Ref. No.	Part Code	Description	Rating	Qty	Note
Q 98		NOT ASSIGN			
Q 99		NOT ASSIGN			
Q 100		NOT ASSIGN			
Q 101		2SC2758 (U16 OR U1		1	
Q 102		2SC2351		1	
Q 103		FC54M		1	
Q 104		IC μ PC1656C		1	
Q 105		DIODE 1SV34		1	
Q 106		IC μ PC1654A		1	
Q 107		TRANSISTOR 2SC1252		1	
Q 108		DIODE 1SS99		1	
Q 109		2SC1623		1	
Q 110		DIODE 1S2835		1	
Q 111		IC μ PC1651G		1	
Q 112		NOT ASSIGN			
Q 113		NOT ASSIGN			
Q 114		MT19		1	
Q 115		μ PB597CX		1	
Q 116		μ PD2833C		1	
Q 117		2SC1622A (D16 OR D		1	
Q 118		2SC1622A (D16 OR D		1	
Q 119		μ PC258G		1	
Q 120		DIODE 1SS123		1	

* Selected at factory

© TEC 1993 07

ANRITSU CORP.

Ref. No.	Part Code	Description	Rating	Qty	Note
Q 121		NOT ASSIGN			
Q 122		NOT ASSIGN			
Q 123		NOT ASSIGN			
Q 124		IC 74HC374		1	
Q 125		μ PD7011C		1	
Q 126		μ PC251G2		1	
Q 127		LM833M		1	
Q 128		DIODE 1SS99		1	
R 1		CERMET RESISTOR RK73M2A182J	1.8k Ω ± 5%,1/10W	1	
R 2		CERMET RESISTOR RK73M2A272J	2.7k Ω ± 5%,1/10W	1	
R 3		CERMET RESISTOR RK73M2A221J	220Ω ± 5%,1/10W	1	
R 4		CERMET RESISTOR RK73M2A331J	330Ω ± 5%,1/10W	1	
R 5		CERMET RESISTOR RK73M2A471J	470Ω ± 5%,1/10W	1	
R 6		CERMET RESISTOR RK73M2A272J	2.7k Ω ± 5%,1/10W	1	
R 7		VARIABLE RESISTOR RG04B502H	5k Ω ± 20%,1/4W	1	•
R 8		CERMET RESISTOR RK73M2A680J	68Ω ± 5%,1/10W	1	
R 9		CERMET RESISTOR RK73M2A680J	68Ω ± 5%,1/10W	1	
R 10		CERMET RESISTOR RK73M2A121J	120Ω ± 5%,1/10W	1	
R 11		CERMET RESISTOR RK73M2A331J	330Ω ± 5%,1/10W	1	
R 12		CERMET RESISTOR RK73M2A471J	470Ω ± 5%,1/10W	1	
R 13		CERMET RESISTOR RK73M2A470J	47Ω ± 5%,1/10W	1	
R 14		CERMET RESISTOR RK73M2A470J	47Ω ± 5%,1/10W	1	

* Selected at factory

© TEC 1993 07

ANRITSU CORP.

Ref. No.	Part Code	Description	Rating	Qty	Note
R 15		METAL FILM RESISTOR	75Ω		
		NRN1/4C4 75.0Ω D	± 0.5%,1/4W	1	
R 16		CARBON FILM RES	33Ω		
		ARD25T330J	± 5%,1/4W	1	
R 17					
		RS2FS221JL		1	
R 18		CERMET RESISTOR	330Ω		
		RK73M2A331J	± 5%,1/10W	1	
R 19		METAL FILM RESISTOR	470Ω		
		RN73G2A471D	± 0.5%,1/10W	1	
R 20		CERMET RESISTOR	22Ω		
		RK73M2A220J	± 5%,1/10W	1	
R 21		CERMET RESISTOR	100k Ω		
		RK73M2A104J	± 5%,1/10W	1	
R 22		CERMET RESISTOR	10k Ω		
		RK73M2A103J	± 5%,1/10W	1	
R 23		CERMET RESISTOR	1.2k Ω		
		RK73M2A122J	± 5%,1/10W	1	
R 24		CERMET RESISTOR	12k Ω		
		RK73M2A123J	± 5%,1/10W	1	
R 25		CERMET RESISTOR	3.3k Ω		
		RK73M2A332J	± 5%,1/10W	1	
R 26		CERMET RESISTOR	100Ω		
		RK73M2A101J	± 5%,1/10W	1	
R 27		CERMET RESISTOR	1k Ω		
		RK73M2A102J	± 5%,1/10W	1	
R 28		CERMET RESISTOR	10k Ω		
		RK73M2A103J	± 5%,1/10W	1	
R 29		CERMET RESISTOR	470Ω		
		RK73M2A471J	± 5%,1/10W	1	
R 30		CERMET RESISTOR	390Ω		
		RK73M2A391J	± 5%,1/10W	1	
R 31		CERMET RESISTOR	100k Ω		
		RK73M2A104J	± 5%,1/10W	1	
R 32		NOT ASSIGN			
R 33		METAL FILM RESISTOR	348Ω		
		RN14K2E3480D	± 0.5%,1/4W	1	
R 34		METAL FILM RESISTOR	2k Ω		
		RN73G2A202D	± 0.5%,1/10W	1	
R 35		METAL FILM RESISTOR	2k Ω		
		RN73G2A202D	± 0.5%,1/10W	1	
R 36		VARIABLE RESISTOR	10k Ω		
		RG04B103H	± 20%,1/4W	1	•
R 37		VARIABLE RESISTOR	100k Ω		
		RG04B104H	± 20%,1/4W	1	•

• : Selected at factory

DRAWING No. 44W86734 -06 27/36

ANRITSU CORP.

Ref. No.	Part Code	Description	Rating	Qty	Note
R 38		METAL FILM RESISTOR	7.5k Ω		
		RN73G2A752D	± 0.5%,1/10W	1	
R 39		CERMET RESISTOR	10k Ω		
		RK73M2A103J	± 5%,1/10W	1	
R 40		METAL FILM RESISTOR	100k Ω		
		RN73G2A104D	± 0.5%,1/10W	1	
R 41		METAL FILM RESISTOR	100k Ω		
		RN73G2A104D	± 0.5%,1/10W	1	
R 42		METAL FILM RESISTOR	100k Ω		
		RN73G2A104D	± 0.5%,1/10W	1	
R 43		METAL FILM RESISTOR	6.8k Ω		
		RN73G2A682D	± 0.5%,1/10W	1	
R 44		CERMET RESISTOR	1MΩ		
		RK73M2A105J	± 5%,1/10W	1	
R 45		METAL FILM RESISTOR	1.8k Ω		
		RN73G2A182D	± 0.5%,1/10W	1	
R 46		METAL FILM RESISTOR	470Ω		
		RN73G2A471D	± 0.5%,1/10W	1	
R 47		VARIABLE RESISTOR	500Ω		
		RG04B501H	± 20%,1/4W	1	•
R 48		METAL FILM RESISTOR	24k Ω		
		RN73G2A243D	± 0.5%,1/10W	1	
R 49		VARIABLE RESISTOR	5k Ω		
		RG04B502H	± 20%,1/4W	1	•
R 50		CERMET RESISTOR	330Ω		
		RK73M2A331J	± 5%,1/10W	1	
R 51		CERMET RESISTOR	1.8k Ω		
		RK73M2A182J	± 5%,1/10W	1	
R 52		CERMET RESISTOR	2.7k Ω		
		RK73M2A272J	± 5%,1/10W	1	
R 53		CERMET RESISTOR	220Ω		
		RK73M2A221J	± 5%,1/10W	1	
R 54		CERMET RESISTOR	330Ω		
		RK73M2A331J	± 5%,1/10W	1	
R 55		CERMET RESISTOR	470Ω		
		RK73M2A471J	± 5%,1/10W	1	
R 56		CERMET RESISTOR	2.7k Ω		
		RK73M2A272J	± 5%,1/10W	1	
R 57		VARIABLE RESISTOR	5k Ω		
		RG04B502H	± 20%,1/4W	1	•
R 58		CERMET RESISTOR	68Ω		
		RK73M2A680J	± 5%,1/10W	1	
R 59		CERMET RESISTOR	68Ω		
		RK73M2A880J	± 5%,1/10W	1	
R 60		CERMET RESISTOR	120Ω		
		RK73M2A121J	± 5%,1/10W	1	

• : Selected at factory

DRAWING No. 44W86734 -06 28/36

ANRITSU CORP.

Ref. No.	Part Code	Description	Rating	Qty	Note
R 61		CERMET RESISTOR	330Ω		
		RK73M2A331J	± 5%,1/10W	1	
R 62		CERMET RESISTOR	470Ω		
		RK73M2A471J	± 5%,1/10W	1	
R 63		CERMET RESISTOR	47Ω		
		RK73M2A470J	± 5%,1/10W	1	
R 64		CERMET RESISTOR	47Ω		
		RK73M2A470J	± 5%,1/10W	1	
R 65		METAL FILM RESISTOR	75Ω		
		NRN1/4C4 75.0Ω D	± 0.5%,1/4W	1	
R 66		CARBON FILM RES	33Ω		
		ARD25T330J	± 5%,1/4W	1	
R 67					
		RS2FS221JL		1	
R 68		CERMET RESISTOR	330Ω		
		RK73M2A331J	± 5%,1/10W	1	
R 69		METAL FILM RESISTOR	470Ω		
		RN73G2A471D	± 0.5%,1/10W	1	
R 70		CERMET RESISTOR	22Ω		
		RK73M2A220J	± 5%,1/10W	1	
R 71		CERMET RESISTOR	100k Ω		
		RK73M2A104J	± 5%,1/10W	1	
R 72		CERMET RESISTOR	10k Ω		
		RK73M2A103J	± 5%,1/10W	1	
R 73		CERMET RESISTOR	1.2k Ω		
		RK73M2A122J	± 5%,1/10W	1	
R 74		CERMET RESISTOR	12k Ω		
		RK73M2A123J	± 5%,1/10W	1	
R 75		CERMET RESISTOR	3.3k Ω		
		RK73M2A332J	± 5%,1/10W	1	
R 76		CERMET RESISTOR	100Ω		
		RK73M2A101J	± 5%,1/10W	1	
R 77		CERMET RESISTOR	1k Ω		
		RK73M2A102J	± 5%,1/10W	1	
R 78		CERMET RESISTOR	10k Ω		
		RK73M2A103J	± 5%,1/10W	1	
R 79		CERMET RESISTOR	470Ω		
		RK73M2A471J	± 5%,1/10W	1	
R 80		CERMET RESISTOR	390Ω		
		RK73M2A391J	± 5%,1/10W	1	
R 81		CERMET RESISTOR	100k Ω		
		RK73M2A104J	± 5%,1/10W	1	
R 82		NOT ASSIGN			
R 83		METAL FILM RESISTOR	348Ω		
		RN14K2E3480D	± 0.5%,1/4W	1	

• : Selected at factory

DRAWING No. 44W86734 -06 29/36

ANRITSU CORP.

Ref. No.	Part Code	Description	Rating	Qty	Note
R 84		METAL FILM RESISTOR	2k Ω		
		RN73G2A202D	± 0.5%,1/10W	1	
R 85		METAL FILM RESISTOR	2k Ω		
		RN73G2A202D	± 0.5%,1/10W	1	
R 86		VARIABLE RESISTOR	10k Ω		
		RG04B103H	± 20%,1/4W	1	•
R 87		VARIABLE RESISTOR	100k Ω		
		RG04B104H	± 20%,1/4W	1	•
R 88		METAL FILM RESISTOR	7.5k Ω		
		RN73G2A752D	± 0.5%,1/10W	1	
R 89		CERMET RESISTOR	10k Ω		
		RK73M2A103J	± 5%,1/10W	1	
R 90		METAL FILM RESISTOR	100k Ω		
		RN73G2A104D	± 0.5%,1/10W	1	
R 91		METAL FILM RESISTOR	100k Ω		
		RN73G2A104D	± 0.5%,1/10W	1	
R 92		METAL FILM RESISTOR	100k Ω		
		RN73G2A104D	± 0.5%,1/10W	1	
R 93		METAL FILM RESISTOR	6.8k Ω		
		RN73G2A682D	± 0.5%,1/10W	1	
R 94		CERMET RESISTOR	1MΩ		
		RK73M2A105J	± 5%,1/10W	1	
R 95		METAL FILM RESISTOR	1.8k Ω		
		RN73G2A182D	± 0.5%,1/10W	1	
R 96		METAL FILM RESISTOR	470Ω		
		RN73G2A471D	± 0.5%,1/10W	1	
R 97		VARIABLE RESISTOR	500Ω		
		RG04B501H	± 20%,1/4W	1	•
R 98		METAL FILM RESISTOR	24k Ω		
		RN73G2A243D	± 0.5%,1/10W	1	
R 99		VARIABLE RESISTOR	5k Ω		
		RG04B502H	± 20%,1/4W	1	•
R 100		CERMET RESISTOR	330Ω		
		RK73M2A331J	± 5%,1/10W	1	
R 101		CERMET RESISTOR	1.8k Ω		
		RK73M2A182J	± 5%,1/10W	1	
R 102		CERMET RESISTOR	2.7k Ω		
		RK73M2A272J	± 5%,1/10W	1	
R 103		CERMET RESISTOR	220Ω		
		RK73M2A221J	± 5%,1/10W	1	
R 104		CERMET RESISTOR	330Ω		
		RK73M2A331J	± 5%,1/10W	1	
R 105		CERMET RESISTOR	470Ω		
		RK73M2A471J	± 5%,1/10W	1	
R 106		CERMET RESISTOR	2.7k Ω		
		RK73M2A272J	± 5%,1/10W	1	

• : Selected at factory

DRAWING No. 44W86734 -06 30/36

ANRITSU CORP.

Ref. No.	Part Code	Description	Rating	Qty	Note
R 107		VARIABLE RESISTOR	5k Ω		
		RG04B502H	± 20%.1/4W	1	•
R 108		CERMET RESISTOR	68Ω		
		RK73M2A680J	± 5%.1/10W	1	
R 109		CERMET RESISTOR	68Ω		
		RK73M2A680J	± 5%.1/10W	1	
R 110		CERMET RESISTOR	120Ω		
		RK73M2A121J	± 5%.1/10W	1	
R 111		CERMET RESISTOR	330Ω		
		RK73M2A331J	± 5%.1/10W	1	
R 112		CERMET RESISTOR	470Ω		
		RK73M2A471J	± 5%.1/10W	1	
R 113		CERMET RESISTOR	47Ω		
		RK73M2A470J	± 5%.1/10W	1	
R 114		CERMET RESISTOR	47Ω		
		RK73M2A470J	± 5%.1/10W	1	
R 115		METAL FILM RESISTOR	75Ω		
		NRN1/4C4 75.0Ω D	± 0.5%.1/4W	1	
R 116		CARBON FILM RES	33Ω		
		ARD25T330J	± 5%.1/4W	1	
R 117					
		RS2FS221JL		1	
R 118		CERMET RESISTOR	330Ω		
		RK73M2A331J	± 5%.1/10W	1	
R 119		METAL FILM RESISTOR	470Ω		
		RN73G2A471D	± 0.5%.1/10W	1	
R 120		CERMET RESISTOR	22Ω		
		RK73M2A220J	± 5%.1/10W	1	
R 121		CERMET RESISTOR	100k Ω		
		RK73M2A104J	± 5%.1/10W	1	
R 122		CERMET RESISTOR	10k Ω		
		RK73M2A103J	± 5%.1/10W	1	
R 123		CERMET RESISTOR	1.2k Ω		
		RK73M2A122J	± 5%.1/10W	1	
R 124		CERMET RESISTOR	12k Ω		
		RK73M2A123J	± 5%.1/10W	1	
R 125		CERMET RESISTOR	3.3k Ω		
		RK73M2A332J	± 5%.1/10W	1	
R 126		CERMET RESISTOR	100Ω		
		RK73M2A101J	± 5%.1/10W	1	
R 127		CERMET RESISTOR	1k Ω		
		RK73M2A102J	± 5%.1/10W	1	
R 128		CERMET RESISTOR	10k Ω		
		RK73M2A103J	± 5%.1/10W	1	
R 129		CERMET RESISTOR	470Ω		
		RK73M2A471J	± 5%.1/10W	1	

* : Selected at factory

k TOZI 1993.07

ANRITSU CORP.

Ref. No.	Part Code	Description	Rating	Qty	Note
R 130		CERMET RESISTOR	390Ω		
		RK73M2A391J	± 5%.1/10W	1	
R 131		CERMET RESISTOR	100k Ω		
		RK73M2A104J	± 5%.1/10W	1	
R 132		NOT ASSIGN			
R 133		METAL FILM RESISTOR	348Ω		
		RN14K2E3480D	± 0.5%.1/4W	1	
R 134		METAL FILM RESISTOR	2k Ω		
		RN73G2A202D	± 0.5%.1/10W	1	
R 135		METAL FILM RESISTOR	2k Ω		
		RN73G2A202D	± 0.5%.1/10W	1	
R 136		VARIABLE RESISTOR	10k Ω		
		RG04B103H	± 20%.1/4W	1	•
R 137		VARIABLE RESISTOR	100k Ω		
		RG04B104H	± 20%.1/4W	1	•
R 138		METAL FILM RESISTOR	7.5k Ω		
		RN73G2A752D	± 0.5%.1/10W	1	
R 139		CERMET RESISTOR	10k Ω		
		RK73M2A103J	± 5%.1/10W	1	
R 140		METAL FILM RESISTOR	100k Ω		
		RN73G2A104D	± 0.5%.1/10W	1	
R 141		METAL FILM RESISTOR	100k Ω		
		RN73G2A104D	± 0.5%.1/10W	1	
R 142		METAL FILM RESISTOR	100k Ω		
		RN73G2A104D	± 0.5%.1/10W	1	
R 143		METAL FILM RESISTOR	6.8k Ω		
		RN73G2A682D	± 0.5%.1/10W	1	
R 144		CERMET RESISTOR	1MΩ		
		RK73M2A105J	± 5%.1/10W	1	
R 145		METAL FILM RESISTOR	1.8k Ω		
		RN73G2A182D	± 0.5%.1/10W	1	
R 146		METAL FILM RESISTOR	470Ω		
		RN73G2A471D	± 0.5%.1/10W	1	
R 147		VARIABLE RESISTOR	500Ω		
		RG04B501H	± 20%.1/4W	1	•
R 148		METAL FILM RESISTOR	24k Ω		
		RN73G2A243D	± 0.5%.1/10W	1	
R 149		VARIABLE RESISTOR	5k Ω		
		RG04B502H	± 20%.1/4W	1	•
R 150		CERMET RESISTOR	330Ω		
		RK73M2A331J	± 5%.1/10W	1	
R 151		METAL FILM RESISTOR	10k Ω		
		RN73G2A103D	± 0.5%.1/10W	1	
R 152		METAL FILM RESISTOR	2k Ω		
		RN73G2A202D	± 0.5%.1/10W	1	

* : Selected at factory

k TOZI 1993.07

ANRITSU CORP.

Ref. No.	Part Code	Description	Rating	Qty	Note
R 153		METAL FILM RESISTOR	10k Ω		
		RN73G2A103D	± 0.5%.1/10W	1	
R 154		METAL FILM RESISTOR	2k Ω		
		RN73G2A202D	± 0.5%.1/10W	1	
R 155		METAL FILM RESISTOR	10k Ω		
		RN73G2A103D	± 0.5%.1/10W	1	
R 156		METAL FILM RESISTOR	2k Ω		
		RN73G2A202D	± 0.5%.1/10W	1	
R 157		METAL FILM RESISTOR	17.4Ω		
		NRN1/4C4 17.4Ω D	± 0.5%.1/4W	1	
R 158		METAL FILM RESISTOR	654Ω		
		NRN1/4C4 654Ω D	± 0.5%.1/4W	1	
R 159		METAL FILM RESISTOR	654Ω		
		NRN1/4C4 654Ω D	± 0.5%.1/4W	1	
R 160		NOT ASSIGN			
R 161		CERMET RESISTOR	1.8k Ω		
		RK73M2A182J	± 5%.1/10W	1	
R 162		CERMET RESISTOR	2.7k Ω		
		RK73M2A272J	± 5%.1/10W	1	
R 163		CERMET RESISTOR	220Ω		
		RK73M2A221J	± 5%.1/10W	1	
R 164		CERMET RESISTOR	330Ω		
		RK73M2A331J	± 5%.1/10W	1	
R 165		CERMET RESISTOR	470Ω		
		RK73M2A471J	± 5%.1/10W	1	
R 166		CERMET RESISTOR	2.7k Ω		
		RK73M2A272J	± 5%.1/10W	1	
R 167		VARIABLE RESISTOR	5k Ω		
		RG04B502H	± 20%.1/4W	1	•
R 168		CERMET RESISTOR	68Ω		
		RK73M2A680J	± 5%.1/10W	1	
R 169		CERMET RESISTOR	68Ω		
		RK73M2A680J	± 5%.1/10W	1	
R 170		CERMET RESISTOR	120Ω		
		RK73M2A121J	± 5%.1/10W	1	
R 171		CERMET RESISTOR	330Ω		
		RK73M2A331J	± 5%.1/10W	1	
R 172		CERMET RESISTOR	470Ω		
		RK73M2A471J	± 5%.1/10W	1	
R 173		CERMET RESISTOR	47Ω		
		RK73M2A470J	± 5%.1/10W	1	
R 174		CERMET RESISTOR	47Ω		
		RK73M2A470J	± 5%.1/10W	1	
R 175		METAL FILM RESISTOR	75Ω		
		NRN1/4C4 75.0Ω D	± 0.5%.1/4W	1	

* : Selected at factory

k TOZI 1993.07

ANRITSU CORP.

Ref. No.	Part Code	Description	Rating	Qty	Note
R 176		CARBON FILM RES	33Ω		
		ARD25T330J	± 5%.1/4W	1	
R 177					
		RS2FS221JL		1	
R 178		CERMET RESISTOR	330Ω		
		RK73M2A331J	± 5%.1/10W	1	
R 179		METAL FILM RESISTOR	470Ω		
		RN73G2A471D	± 0.5%.1/10W	1	
R 180		CERMET RESISTOR	22Ω		
		RK73M2A220J	± 5%.1/10W	1	
R 181		CERMET RESISTOR	100k Ω		
		RK73M2A104J	± 5%.1/10W	1	
R 182		CERMET RESISTOR	10k Ω		
		RK73M2A103J	± 5%.1/10W	1	
R 183		CERMET RESISTOR	1.2k Ω		
		RK73M2A122J	± 5%.1/10W	1	
R 184		CERMET RESISTOR	12k Ω		
		RK73M2A123J	± 5%.1/10W	1	
R 185		CERMET RESISTOR	3.3k Ω		
		RK73M2A332J	± 5%.1/10W	1	
R 186		CERMET RESISTOR	100Ω		
		RK73M2A101J	± 5%.1/10W	1	
R 187		CERMET RESISTOR	1k Ω		
		RK73M2A102J	± 5%.1/10W	1	
R 188		CERMET RESISTOR	10k Ω		
		RK73M2A103J	± 5%.1/10W	1	
R 189		CERMET RESISTOR	470Ω		
		RK73M2A471J	± 5%.1/10W	1	
R 190		CERMET RESISTOR	390Ω		
		RK73M2A391J	± 5%.1/10W	1	
R 191		CERMET RESISTOR	100k Ω		
		RK73M2A104J	± 5%.1/10W	1	
R 192		NOT ASSIGN			
R 193		METAL FILM RESISTOR	348Ω		
		RN14K2E3480D	± 0.5%.1/4W	1	
R 194		METAL FILM RESISTOR	2k Ω		
		RN73G2A202D	± 0.5%.1/10W	1	
R 195		METAL FILM RESISTOR	2k Ω		
		RN73G2A202D	± 0.5%.1/10W	1	
R 196		VARIABLE RESISTOR	10k Ω		
		RG04B103H	± 20%.1/4W	1	•
R 197		VARIABLE RESISTOR	100k Ω		
		RG04B104H	± 20%.1/4W	1	•
R 198		METAL FILM RESISTOR	7.5k Ω		
		RN73G2A752D	± 0.5%.1/10W	1	

* : Selected at factory

k TOZI 1993.07

ANRITSU CORP.

Ref. No.	Part Code	Description	Rating	Qty	Note
R 199		CERMET RESISTOR	10k Ω		
		RK73M2A103J	± 5%.1/10W	1	
R 200		METAL FILM RESISTOR	100k Ω		
		RN73G2A104D	± 0.5%.1/10W	1	
R 201		METAL FILM RESISTOR	100k Ω		
		RN73G2A104D	± 0.5%.1/10W	1	
R 202		METAL FILM RESISTOR	100k Ω		
		RN73G2A104D	± 0.5%.1/10W	1	
R 203		METAL FILM RESISTOR	6.8k Ω		
		RN73G2A682D	± 0.5%.1/10W	1	
R 204		CERMET RESISTOR	1MΩ		
		RK73M2A105J	± 5%.1/10W	1	
R 205		METAL FILM RESISTOR	1.8k Ω		
		RN73G2A182D	± 0.5%.1/10W	1	
R 206		METAL FILM RESISTOR	470Ω		
		RN73G2A471D	± 0.5%.1/10W	1	
R 207		VARIABLE RESISTOR	500Ω		
		RG04B501H	± 20%.1/4W	1	•
R 208		METAL FILM RESISTOR	24k Ω		
		RN73G2A243D	± 0.5%.1/10W	1	
R 209		VARIABLE RESISTOR	5k Ω		
		RG04B502H	± 20%.1/4W	1	•
R 210		CERMET RESISTOR	330Ω		
		RK73M2A331J	± 5%.1/10W	1	
R 211		METAL FILM RESISTOR	10k Ω		
		RN73G2A103D	± 0.5%.1/10W	1	
R 212		METAL FILM RESISTOR	2k Ω		
		RN73G2A202D	± 0.5%.1/10W	1	
R 213		NOT ASSIGN			
R 214		NOT ASSIGN			
R 215		NOT ASSIGN			
R 216		NOT ASSIGN			
R 217		NOT ASSIGN			
R 218		METAL FILM RESISTOR	4.7k Ω		
		RN73G2A472D	± 0.5%.1/10W	1	
R 219		METAL FILM RESISTOR	4.7k Ω		
		RN73G2A472D	± 0.5%.1/10W	1	
R 220		METAL FILM RESISTOR	4.7k Ω		
		RN73G2A472D	± 0.5%.1/10W	1	
R 221		METAL FILM RESISTOR	4.7k Ω		
		RN73G2A472D	± 0.5%.1/10W	1	

Rev. No/Date

* Selected at factory

DRAWING No. 44W86734 -06 35/36

© TTZI 1993.07

ANRITSU CORP.

Ref. No.	Part Code	Description	Rating	Qty	Note
R 222		CERMET RESISTOR	75Ω		
		RK73M2A750J	± 5%.1/10W	1	
R 223		CERMET RESISTOR	75Ω		
		RK73M2A750J	± 5%.1/10W	1	
R 224		CERMET RESISTOR	75Ω		
		RK73M2A750J	± 5%.1/10W	1	
R 225		CERMET RESISTOR	75Ω		
		RK73M2A750J	± 5%.1/10W	1	
R 226		METAL FILM RESISTOR	10k Ω		
		RN73G2A103D	± 0.5%.1/10W	1	
R 227		METAL FILM RESISTOR	10k Ω		
		RN73G2A103D	± 0.5%.1/10W	1	
R 228		METAL FILM RESISTOR	10k Ω		
		RN73G2A103D	± 0.5%.1/10W	1	
R 229		METAL FILM RESISTOR	10k Ω		
		RN73G2A103D	± 0.5%.1/10W	1	
R 230		CERMET RESISTOR	6.8Ω		
		RK73M2A6R8J	± 5%.1/10W	1	
R 231		METAL FILM RESISTOR	910Ω		
		RN73G2A911D	± 0.5%.1/10W	1	
R 232		METAL FILM RESISTOR	910Ω		
		RN73G2A911D	± 0.5%.1/10W	1	
R 233		CERMET RESISTOR	6.8Ω		
		RK73M2A6R8J	± 5%.1/10W	1	
R 234		METAL FILM RESISTOR	910Ω		
		RN73G2A911D	± 0.5%.1/10W	1	
R 235		METAL FILM RESISTOR	910Ω		
		RN73G2A911D	± 0.5%.1/10W	1	
R 236		CERMET RESISTOR	6.8Ω		
		RK73M2A6R8J	± 5%.1/10W	1	
R 237		METAL FILM RESISTOR	910Ω		
		RN73G2A911D	± 0.5%.1/10W	1	
R 238		METAL FILM RESISTOR	910Ω		
		RN73G2A911D	± 0.5%.1/10W	1	
R 239		CERMET RESISTOR	6.8Ω		
		RK73M2A6R8J	± 5%.1/10W	1	
R 240		METAL FILM RESISTOR	910Ω		
		RN73G2A911D	± 0.5%.1/10W	1	
R 241		METAL FILM RESISTOR	910Ω		
		RN73G2A911D	± 0.5%.1/10W	1	
Z 1		PSC-4-1-75		1	

Rev. No/Date

* Selected at factory

DRAWING No. 44W86734 -06 36/36

© TTZI 1993.07

ANRITSU CORP.

Parts List of: ME4510B 5
DMSA TX
A3 CPU

Ref. No.	Part Code	Description	Rating	Qty	Note
C 1		CER CAP			
		CK733B1H104K		1	
C 2		CER CAP			
		CK733B1H104K		1	
C 3		CER CAP			
		CK733B1H104K		1	
C 4		CER CAP			
		CK733B1H104K		1	
C 5		CER CAP			
		CK733B1H104K		1	
C 6		CER CAP			
		CK733B1H104K		1	
C 7		NOT ASSIGN			
C 8		CER CAP			
		CK733B1H104K		1	
C 9		CER CAP			
		CK733B1H104K		1	
C 10		CER CAP			
		CK733B1H104K		1	
C 11		CER CAP			
		CK733B1H104K		1	
C 12		AL ELECTLT CAP	4.7μ F		
		CE04C1H4R7A	± 20%.50V	1	
C 13		AL ELECTLT CAP			
		CE04C1E220		1	
C 14		NOT ASSIGN			
C 15		NOT ASSIGN			
C 16		NOT ASSIGN			
C 17		NOT ASSIGN			
C 18		NOT ASSIGN			
C 19		NOT ASSIGN			
C 20		AL ELECTLT CAP	220μ F		
		CE04C1A221A	± 20%.10V	1	
C 21		CER CAP			
		CK733B1H104K		1	
C 22		CER CAP			
		CK733B1H104K		1	
C 23		CER CAP			
		CK733B1H104K		1	

Rev. No/Date

CHECKED BY

APPROVED BY

Dsgn

* Selected at factory

DRAWING No. 44W86735 -04 1/11

© TTZI 1993.07

ANRITSU CORP.

Ref. No.	Part Code	Description	Rating	Qty	Note
C 24		CER CAP			
		CK733B1H104K		1	
C 25		CER CAP			
		CK733B1H104K		1	
C 26		CER CAP			
		CK733B1H104K		1	
C 27		NOT ASSIGN			
C 28		NOT ASSIGN			
C 29		AL ELECTLT CAP	47μ F		
		CE04C1E470A	± 20%.25V	1	
C 30		CER CAP			
		CK733B1H104K		1	
C 31		CER CAP			
		CK733B1H104K		1	
C 32		CER CAP			
		CK733B1H104K		1	
C 33		CER CAP			
		CK733B1H104K		1	
C 34		CER CAP			
		CK733B1H104K		1	
C 35		CER CAP			
		CK733B1H104K		1	
C 36		CER CAP			
		CK733B1H104K		1	
C 37		CER CAP			
		CK733B1H104K		1	
C 38		CER CAP	1000p F		
		CK732B1H102K	± 10%.50V	1	
C 39		CER CAP			
		CK733B1H104K		1	
C 40		CER CAP			
		CK733B1H104K		1	
C 41		CER CAP			
		CK733B1H104K		1	
C 42		CER CAP			
		CK733B1H104K		1	
C 43		CER CAP			
		CK733B1H104K		1	
C 44		CER CAP			
		CK733B1H104K		1	
C 45		CER CAP			
		CK733B1H104K		1	
C 46		CER CAP			
		CK733B1H104K		1	

Rev. No/Date

* Selected at factory

DRAWING No. 44W86735 -04 2/11

© TTZI 1993.07

ANRITSU CORP.

Ref. No.	Part Code	Description	Rating	Qty	Note
C 47		CER CAP			
		CK733B1H104K		1	
C 48		NOT ASSIGN			
C 49		NOT ASSIGN			
C 50		NOT ASSIGN			
C 51		NOT ASSIGN			
C 52		NOT ASSIGN			
C 53		NOT ASSIGN			
C 54		NOT ASSIGN			
C 55		CER CAP			
		CK733B1H104K		1	
C 58		CER CAP			
		CK733B1H104K		1	
C 57		CER CAP	1000 p F		
		CK732B1H102K	± 10%.50V	1	
C 58		CER CAP			
		CK733B1H104K		1	
C 59		CER CAP	1000 p F		
		CK732B1H102K	± 10%.50V	1	
C 60		CER CAP			
		CK733B1H104K		1	
C 61		NOT ASSIGN			
C 62		NOT ASSIGN			
C 63		NOT ASSIGN			
C 64		NOT ASSIGN			
C 65		CER CAP			
		CK733B1H104K		1	
C 66		CER CAP	1000 p F		
		CK732B1H102K	± 10%.50V	1	
C 67		CER CAP	100 p F		
		CC732CH1H101J	± 5%.50V	1	
C 68		CER CAP			
		CK733B1H104K		1	
C 69		CER CAP			
		CK733B1H104K		1	

ANRITSU CORP.

Ref. No.	Part Code	Description	Rating	Qty	Note
C 70		CER CAP			
		CK733B1H104K		1	
C 71		CER CAP	4700 p F		
		CK732B1H472K	± 10%.50V	1	
C 72		NOT ASSIGN			
C 73		CER CAP	0.01μ F		
		CK732B1H103K	± 10%.50V	1	
C 74		NOT ASSIGN			
C 75		NOT ASSIGN			
C 76		NOT ASSIGN			
C 77		NOT ASSIGN			
C 78		NOT ASSIGN			
C 79		NOT ASSIGN			
C 80		NOT ASSIGN			
C 81		CER CAP			
		CK733B1H104K		1	
C 82		CER CAP			
		CK733B1H104K		1	
C 83		CER CAP			
		CK733B1H104K		1	
C 84		CER CAP			
		CK733B1H104K		1	
C 85		CER CAP			
		CK733B1H104K		1	
C 86		CER CAP			
		CK733B1H104K		1	
C 87		CER CAP			
		CK733B1H104K		1	
C 88		CER CAP			
		CK733B1H104K		1	
C 89		CER CAP			
		CK733B1H104K		1	
C 90		CER CAP			
		CK733B1H104K		1	
C 91		CER CAP			
		CK733B1H104K		1	
C 92		CER CAP			
		CK733B1H104K		1	

ANRITSU CORP.

Ref. No.	Part Code	Description	Rating	Qty	Note
C 93		CER CAP			
		CK733B1H104K		1	
C 94		CER CAP			
		CK733B1H104K		1	
C 95		CER CAP			
		CK733B1H104K		1	
C 96		CER CAP			
		CK733B1H104K		1	
C 97		CER CAP			
		CK733B1H104K		1	
C 98		CER CAP			
		CK733B1H104K		1	
C 99		CER CAP			
		CK733B1H104K		1	
C 100		CER CAP			
		CK733B1H104K		1	
C 101		CER CAP			
		CK733B1H104K		1	
C 102		NOT ASSIGN			
C 103		AL ELECTLT CAP	220μ F		
		CE04C1A221A	± 20%.10V	1	
C 104		NOT ASSIGN			
C 105		NOT ASSIGN			
C 106		CER CAP			
		CK733B1H104K		1	
C 107		CER CAP			
		CK733B1H104K		1	
J 1		PLUG	60P		
		CNF3-60P-2.54DSA		1	
J 2		PLUG	40P		
		CNF3-40P-2.54DSA		1	
J 3		PLUG	34P		
		CNF3-34P-2.54DSA		1	
J 4		PLUG	15P		
		DF1-15P-2.5DSA		1	
J 5		RECEPTALLE			
		27DP-R-PC-1		1	
J 6		PLUG			
		HIF3H-60PB-2.54DSA		1	
J 7		RECEPTACLE			
		DIC-252		1	

ANRITSU CORP.

Ref. No.	Part Code	Description	Rating	Qty	Note
J 8		PLUG			
		FFC3AMEP		1	
J 9		RECEPTACLE			
		DIC-252		1	
J 10		PLUG			
		FFC3AMEP		1	
L 1		INDUCTOR	22μ H. ± 10%		
		LF8-220K		1	
L 2		NOT ASSIGN			
L 3		NOT ASSIGN			
L 4		INDUCTOR			
		SFT8-50S		1	
Q 1		IC			
		Z0840004PSC		1	W/SOCKET
Q 2		IC			
		74LS244F		1	
Q 3		IC			
		74LS244F		1	
Q 4		IC			
		74LS245F		1	
Q 5		IC			
		74LS42F		1	
Q 6		IC			
		EPROM32KX8-15C		1	W/SOCKET
Q 7		IC			
		74HC02F		1	
Q 8		IC			
		SRAM8KX8-C		1	
Q 9		IC			
		74HC155		1	
Q 10		IC			
		74HC244F		1	
Q 11		IC			
		74HC74F		1	
Q 12		IC			
		74HC74F		1	
Q 13		IC			
		TL7705CPS-8		1	
Q 14		ZENER DIODE			
		RD2.7MB		1	

ANRITSU CORP.

Ref. No.	Part Code	Description	Rating	Qty	Note
Q 15		DIODE			
		1S2837		1	
Q 16		DIODE			
		1S2837		1	
Q 17		NOT ASSIGN			
Q 18		IC			
		74HC04F		1	
Q 19		IC			
		74HC32F		1	
Q 20		IC			
		74LS08F		1	
Q 21		IC			
		74HC08F		1	
Q 22		IC			
		74HC32F		1	
Q 23		NOT ASSIGN			
Q 24		IC			
		74HC138F		1	
Q 25		IC			
		74HC244F		1	
Q 26		IC			
		μ PD7105 4GB-3B4		1	
Q 27		IC			
		μ PD7105 9C		1	
Q 28		IC			
		74HC138F		1	
Q 29		IC			
		74LS245F		1	
Q 30		LED			
		LN28RP		1	
Q 31		LED			
		LN28RP		1	
Q 32		LED			
		LN28RP		1	
Q 33		IC			
		74HC14F		1	
Q 34		IC			
		74HC00F		1	
Q 35		IC			
		74HC00F		1	
Q 36		IC			
		74HC32F		1	
Q 37		IC			
		74HC32F		1	

ANRITSU CORP.

Ref. No.	Part Code	Description	Rating	Qty	Note
Q 38		IC			
		74HC08F		1	
Q 39		IC			
		μ PC78L05J		1	
Q 40		NOT ASSIGN			
Q 41		IC			
		74LS240F		1	
Q 42		IC			
		74HC138F		1	
Q 43		IC			
		μ PD7210C		1	
Q 44		IC			
		SN75160BN		1	
Q 45		IC			
		SN75161BN		1	
Q 46		IC			
		μ PD8279C-2		1	
Q 47		DIODE			
		1S2837		1	
Q 48					
		2SC3735		1	
Q 49		IC			
		74S196		1	
Q 50		IC			
		74LS293F		1	
Q 51					
		74LS74AF		1	
Q 52		IC			
		74LS290F		1	
Q 53		IC			
		74LS290F		1	
Q 54		IC			
		74F191SJ		1	
Q 55		IC			
		74F191SJ		1	
Q 56		IC			
		74HC374F		1	
Q 57		IC			
		74S04F		1	
Q 58		NOT ASSIGN			
Q 59		NOT ASSIGN			
Q 60		NOT ASSIGN			

ANRITSU CORP.

Ref. No.	Part Code	Description	Rating	Qty	Note
Q 61		IC			
		74LS290F		1	
Q 62		IC			
		74HC74F		1	
Q 63		IC			
		74LS74AF		1	
Q 64		IC			
		74LS490F		1	
Q 65		IC			
		74LS490F		1	
Q 66		IC			
		74LS490F		1	
Q 67		IC			
		74HC00F		1	
Q 68		IC			
		74HC32F		1	
Q 69		IC			
		74LS04F		1	
Q 70		IC			
		74HC04F		1	
Q 71		IC			
		74LS74AF		1	
Q 72		NOT ASSIGN			
Q 73		IC			
		TC5032P		1	
Q 74		IC			
		74HC148F		1	
Q 75		IC			
		74HC244F		1	
Q 76		IC			
		74LS04F		1	
Q 77		IC			
		74LS08F		1	
Q 78		NOT ASSIGN			
Q 79		IC			
		74HC174F		1	
Q 80		NOT ASSIGN			
Q 81		IC			
		74HC00F		1	

ANRITSU CORP.

Ref. No.	Part Code	Description	Rating	Qty	Note
R 1		RES ARRAY	10k Ω		
		RRS-8-103JA	± 5%	1	
R 2		CERMET RESISTOR	10k Ω		
		RK73M2A103J	± 5%.1/10W	1	
R 3		CERMET RESISTOR	180Ω		
		RK73M2A181J	± 5%.1/10W	1	
R 4		CERMET RESISTOR	680Ω		
		RK73M2A681J	± 5%.1/10W	1	
R 5		METAL FILM RESISTOR	2k Ω		
		RN14K2E2001D	± 0.5%.1/4W	1	
R 6		CERMET RESISTOR	10k Ω		
		RK73M2A103J	± 5%.1/10W	1	
R 7		CERMET RESISTOR	1k Ω		
		RK73M2A102J	± 5%.1/10W	1	
R 8		RES ARRAY	10k Ω		
		RRS-8-103JA	± 5%	1	
R 9		CERMET RESISTOR	4.7k Ω		
		RK73M2A472J	± 5%.1/10W	1	
R 10		NOT ASSIGN			
R 11		CERMET RESISTOR	820Ω		
		RK73M2A821J	± 5%.1/10W	1	
R 12		CERMET RESISTOR	820Ω		
		RK73M2A821J	± 5%.1/10W	1	
R 13		RES ARRAY	10k Ω		
		RRS-8-103JA	± 5%	1	
R 14		CERMET RESISTOR	820Ω		
		RK73M2A821J	± 5%.1/10W	1	
R 15		CERMET RESISTOR	390Ω		
		RK73M2A391J	± 5%.1/10W	1	
R 16		CERMET RESISTOR	75Ω		
		RK73M2A750J	± 5%.1/10W	1	
R 17		CERMET RESISTOR	330Ω		
		RK73M2A331J	± 5%.1/10W	1	
R 18		CERMET RESISTOR	560Ω		
		RK73M2A561J	± 5%.1/10W	1	
R 19		CERMET RESISTOR	3.3k Ω		
		RK73M2A332J	± 5%.1/10W	1	
R 20		CERMET RESISTOR	2.2k Ω		
		RK73M2A222J	± 5%.1/10W	1	
R 21		CERMET RESISTOR	1k Ω		
		RK73M2A102J	± 5%.1/10W	1	
R 22		CERMET RESISTOR	1k Ω		
		RK73M2A102J	± 5%.1/10W	1	
R 23		CERMET RESISTOR	1k Ω		
		RK73M2A102J	± 5%.1/10W	1	

ANRITSU CORP.

Parts List of: ME4510B/WJ-01 TX
A4 FRONT BOARD
6

Ref. No.	Part Code	Description	Rating	Qty	Note
R 24		CERMET RESISTOR	1k Ω		
		RK73M2A102J	± 5%.1/10W	1	
R 25		CERMET RESISTOR	2.2k Ω		
		RK73M2A222J	± 5%.1/10W	1	
R 26		CERMET RESISTOR	3.3k Ω		
		RK73M2A332J	± 5%.1/10W	1	
R 27		CERMET RESISTOR	1MΩ		
		RK73M2A105J	± 5%.1/10W	1	
R 28		RES ARRAY	4.7k Ω		
		RRS-8-472JA	± 5%	1	
R 29		CERMET RESISTOR	5.6k Ω		
		RK73M2AS62J	± 5%.1/10W	1	
R 30		CERMET RESISTOR	5.6k Ω		
		RK73M2AS62J	± 5%.1/10W	1	
R 31		RES ARRAY	4.7k Ω		
		RRS-8-472JA	± 5%	1	
S 1		SWITCH			
		HL21NS		1	
S 2		SWITCH			
		DISS8A		1	
X 1		XTAL OSC			
		NSA0061B(40MHZ)		1	
Z 1		BATTERY			
		BR-2/3AE2SP		1	

s: Selected at factory
DRAWING No. 44WR6735 -04 11/11
ANRITSU CORP.

Ref. No.	Part Code	Description	Rating	Qty	Note
C 1		CER CAP			
		CK733B1H104K		1	
C 2		CER CAP			
		CK733B1H104K		1	
C 3		CER CAP			
		CK733B1H104K		1	
C 4		CER CAP			
		CK733B1H104K		1	
C 5		CER CAP			
		CK733B1H104K		1	
C 6		CER CAP	1000p F		
		CK732B1H102K	± 10%.50V	1	
C 7		CER CAP			
		CK733B1H104K		1	
C 8		NOT ASSIGN			
C 9		CER CAP			
		CK733B1H104K		1	
C 10		CER CAP			
		CK733B1H104K		1	
C 11		CER CAP			
		CK733B1H104K		1	
C 12		CER CAP			
		CK733B1H104K		1	
C 13		NOT ASSIGN			
C 14		NOT ASSIGN			
C 15		CER CAP			
		CK733B1H104K		1	
C 16		CER CAP			
		CK733B1H104K		1	
C 17		CER CAP			
		CK733B1H104K		1	
C 18		CER CAP			
		CK733B1H104K		1	
C 19		AL ELECTLT CAP	47μ F		
		CE04C1E470A	± 20%.25V	1	
C 20		CER CAP			
		CK733B1H104K		1	
C 21		CER CAP			
		CK733B1H104K		1	
C 22		CER CAP			
		CK733B1H104K		1	
C 23		CER CAP			
		CK733B1H104K		1	

s: Selected at factory
DRAWING No. 44WR6736 -01 1/7
ANRITSU CORP.

Ref. No.	Part Code	Description	Rating	Qty	Note
C 24		CER CAP			
		CK733B1H104K		1	
J 1		CABLE			
		CNF23-40D-AA020S		1	
Q 1		IC			
		74HC138F		1	
Q 2		IC			
		74HC2S9F		1	
Q 3		IC			
		74HC2S9F		1	
Q 4		IC			
		74HC2S9F		1	
Q 5		IC			
		TD62084F		1	
Q 6		IC			
		TD62084F		1	
Q 7		IC			
		TD62084F		1	
Q 8		IC			
		74HC32F		1	
Q 9		NOT ASSIGN			
Q 10		NOT ASSIGN			
Q 11		IC			
		74HC259F		1	
Q 12		IC			
		TD62084F		1	
Q 13		NOT ASSIGN			
Q 14		NOT ASSIGN			
Q 15		IC			
		74HC74F		1	
Q 16		IC			
		74HC00F		1	
Q 17		IC			
		74HC04F		1	
Q 18		IC			
		74HC00F		1	

s: Selected at factory
DRAWING No. 44WR6736 -01 2/7
ANRITSU CORP.

Ref. No.	Part Code	Description	Rating	Qty	Note
Q 19		NOT ASSIGN			
Q 20		NOT ASSIGN			
Q 21		IC			
		74RC238F		1	
Q 22		IC			
		TD62781F		1	
Q 23		IC			
		TD62084F		1	
Q 24	1519-56307	DISPLAY			
		LN524GK		1	
Q 25	1519-56307	DISPLAY			
		LN524GK		1	
Q 26	1519-56307	DISPLAY			
		LN524GK		1	
Q 27	1519-56307	DISPLAY			
		LN524GK		1	
Q 28		NOT ASSIGN			
Q 29		NOT ASSIGN			
Q 30		NOT ASSIGN			
Q 31		NOT ASSIGN			
Q 32	1519-13335	DISPLAY			
		TLG226		1	
Q 33	1519-13335	DISPLAY			
		TLG226		1	
Q 34	1519-13335	DISPLAY			
		TLG226		1	
Q 35		NOT ASSIGN			
Q 36	1519-13335	DISPLAY			
		TLG226		1	
Q 37	1519-13335	DISPLAY			
		TLG226		1	
Q 38	1519-13335	DISPLAY			
		TLG226		1	
Q 39	1519-13335	DISPLAY			
		TLG226		1	
Q 40	1519-17085	DISPLAY			
		LN342GPH		1	
Q 41		DISPLAY			
		LN442YPH		1	

s: Selected at factory
DRAWING No. 44WR6736 -01 3/7
ANRITSU CORP.

Ref. No.	Part Code	Description	Rating	Qty	Note
Q 42		DISPLAY			
		HLMP-2820		1	
Q 43		DISPLAY			
		HLMP-2820		1	
Q 44		DISPLAY			
		HLMP-2550		1	
Q 45		NOT ASSIGN*			
Q 46		NOT ASSIGN			
Q 47		NOT ASSIGN			
Q 48		NOT ASSIGN			
Q 49		NOT ASSIGN			
Q 50		DISPLAY			
		GL480M		1	
Q 51		DISPLAY			
		PT480M		1	
Q 52		DISPLAY			
		GL480M		1	
Q 53		PHOTO TRANSISTOR			
		PT480M		1	
Q 54		IC			
		μ PC277G2		1	
Q 55		IC			
		74HC259F		1	
Q 56		IC			
		TD62084F		1	
Q 57		IC			
		74LS123F		1	
Q 58		IC			
		74HC32F		1	
Q 59		NOT ASSIGN			
Q 60		IC			
		DA-6NC		1	
Q 61		IC			
		DA-6NC		1	
Q 62		IC			
		DA-6NC		1	
Q 63		DIODE			
		1S283S		1	
Q 64		IC			
		DA-6NC		1	

* Selected at factory

Drawing No. 44W86736 -01 4/7

ANRITSU CORP.

Ref. No.	Part Code	Description	Rating	Qty	Note
Q 65		IC			
		DA-6NC		1	
R 1	4415-J0221	RES ARRAY			
		RRS-8-221JA		1	
R 2	4415-J0221	RES ARRAY			
		RRS-8-221JA		1	
R 3	4415-J0221	RES ARRAY			
		RRS-8-221JA		1	
R 4		CERMET RESISTOR	220Ω		
		RK73M2A221J	± 5%.1/10W	1	
R 5		CERMET RESISTOR	220Ω		
		RK73M2A221J	± 5%.1/10W	1	
R 6		RES ARRAY	100Ω		
		RRS-8-101JA	± 5%	1	
R 7		NOT ASSIGN			
R 8		NOT ASSIGN			
R 9		NOT ASSIGN			
R 10		CERMET RESISTOR	330Ω		
		RK73M2A331J	± 5%.1/10W	1	
R 11		NOT ASSIGN			
R 12		NOT ASSIGN			
R 13		NOT ASSIGN			
R 14		NOT ASSIGN			
R 15		NOT ASSIGN			
R 16		CERMET RESISTOR	4.7k Ω		
		RK73M2A472J	± 5%.1/10W	1	
R 17		CERMET RESISTOR	1k Ω		
		RK73M2A102J	± 5%.1/10W	1	
R 18		CERMET RESISTOR	1k Ω		
		RK73M2A102J	± 5%.1/10W	1	
R 19		CERMET RESISTOR	10k Ω		
		RK73M2A103J	± 5%.1/10W	1	
R 20		CERMET RESISTOR	220Ω		
		RK73M2A221J	± 5%.1/10W	1	

* Selected at factory

Drawing No. 44W86736 -01 5/7

ANRITSU CORP.

Ref. No.	Part Code	Description	Rating	Qty	Note
R 21		CERMET RESISTOR	220Ω		
		RK73M2A221J	± 5%.1/10W	1	
R 22		CERMET RESISTOR	220Ω		
		RK73M2A221J	± 5%.1/10W	1	
R 23		CERMET RESISTOR	5.6k Ω		
		RK73M2A562J	± 5%.1/10W	1	
R 24		CERMET RESISTOR	12k Ω		
		RK73M2A123J	± 5%.1/10W	1	
R 25		CERMET RESISTOR	2.2k Ω		
		RK73M2A222J	± 5%.1/10W	1	
R 26		CERMET RESISTOR	1.5k Ω		
		RK73M2A152J	± 5%.1/10W	1	
R 27		CERMET RESISTOR	10k Ω		
		RK73M2A103J	± 5%.1/10W	1	
R 28		CERMET RESISTOR	5.6k Ω		
		RK73M2A562J	± 5%.1/10W	1	
R 29		CERMET RESISTOR	12k Ω		
		RK73M2A123J	± 5%.1/10W	1	
R 30		CERMET RESISTOR	2.2k Ω		
		RK73M2A222J	± 5%.1/10W	1	
R 31		CERMET RESISTOR	15k Ω		
		RK73M2A153J	± 5%.1/10W	1	
R 32		CERMET RESISTOR	10k Ω		
		RK73M2A103J	± 5%.1/10W	1	
R 33		CERMET RESISTOR	220Ω		
		RK73M2A221J	± 5%.1/10W	1	
S 1		SWITCH			
		M85A-ONO01		1	
S 2		SWITCH			
		M85A-ONO01		1	
S 3		SWITCH			
		M85A-ONG01		1	
S 4		SWITCH			
		M85A-ONG01		1	
S 5		SWITCH			
		M85A-ONG01		1	
S 6		SWITCH			
		M85A-ONG01		1	
S 7		SWITCH			
		M85A-ONG01		1	
S 8		SWITCH			
		HL21-LSYG		1	
S 9		SWITCH			
		HL21-LSYG		1	

* Selected at factory

Drawing No. 44W86736 -01 6/7

ANRITSU CORP.

Ref. No.	Part Code	Description	Rating	Qty	Note
S 10		SWITCH			
		HL21-LSYG		1	
S 11		SWITCH			
		HL21-LSYG		1	
S 12		SWITCH			
		HL21-LSYG		1	
S 13		SWITCH			
		HL21-LSYG		1	
S 14		NOT ASSIGN			
S 15		SWITCH			
		HL21-LSYG		1	
S 16		SWITCH			
		HL21-LSYG		1	
S 17		SWITCH			
		HL21-LSYG		1	
S 18		SWITCH			
		HL21-LSYG		1	
S 19		SWITCH			
		HL21-LSYG		1	
S 20		SWITCH			
		HL21-LSYG		1	
S 21		SWITCH			
		HL21-NS		1	
S 22		SWITCH			
		8631 CBD2		1	
S 23		SWITCH			
		8631 CBD2		1	
S 24		SWITCH			
		HL21-LSYG		1	
S 25		SWITCH			
		HL21-LSYG		1	
S 26		SWITCH			
		HL21-LSYG		1	
S 27		SWITCH			
		HL21-LSYG		1	
S 28		SWITCH			
		HL21-NS		1	
Z 1		ROTARY ENCODER			
		MRE30S		1	
Z 2		BUZZER			
		PKB8-4A0		1	

* Selected at factory

Drawing No. 44W86736 -01 7/7

ANRITSU CORP.

Parts List of: A5 POWER SUPPLY 7

Ref. No.	Part Code	Description	Rating	Qty	Note
C 1		AL ELECTLT CAP	4700μF		
		CE691C1V472A	± 20%.35V	1	
C 2		AL ELECTLT CAP	15000μF		
		SMH16VNSN15000 30A	± 20%.16V	1	
C 3		AL ELECTLT CAP	4700μF		
		CE691C1V472A	± 20%.35V	1	
C 4		AL ELECTLT CAP	4700μF		
		CE691C1V472A	± 20%.35V	1	
C 5	2192-Y0476	AL ELECTLT CAP	47μF		
		CE04C1E470A	± 20%.25V	1	
C 6	2192-Y0476	AL ELECTLT CAP	47μF		
		CE04C1E470A	± 20%.25V	1	
C 7	2192-Y0476	AL ELECTLT CAP	47μF		
		CE04C1E470A	± 20%.25V	1	
C 8	2192-Y0476	AL ELECTLT CAP	47μF		
		CE04C1E470A	± 20%.25V	1	
C 9	2192-Y0476	AL ELECTLT CAP	47μF		
		CE04C1E470A	± 20%.25V	1	
C 10	2387-10258	CER CAP	0.1μF.50V		
		CK924F1H104Z	+80/-20%	1	
C 11	2387-10258	CER CAP	0.1μF.50V		
		CK924F1H104Z	+80/-20%	1	
C 12	2387-10258	CER CAP	0.1μF.50V		
		CK924F1H104Z	+80/-20%	1	
C 13	2387-10258	CER CAP	0.1μF.50V		
		CK924F1H104Z	+80/-20%	1	
C 14		AL ELECTLT CAP	10μF		
		CE04C1H100A	± 20%.50V	1	
C 15		AL ELECTLT CAP	10μF		
		CE04C1H100A	± 20%.50V	1	
C 16		AL ELECTLT CAP	10μF		
		CE04C1H100A	± 20%.50V	1	
F 1		FUSE	1.6A.250V		
		MFS1NN250V1.6ADC01		1	
F 2		FUSE			
		MFS1NN250V3.15ADC01		1	
F 3		FUSE	2A.250V		
		MFS1NN250V2A0C01		1	
F 4		FUSE	1.6A.250V		
		MFS1NN250V1.6ADC01		1	

Dep.

○ : Selected at factory

DRAWING No. 44UA737 1/3

No.0073-1988.11

ANRITSU CORP.

Parts List of: A5 POWER SUPPLY

Ref. No.	Part Code	Description	Rating	Qty	Note
J 1	8104-02274	PLUG	15P		
		DF1-15P2.5DSA		1	
J 2	8104-02274	PLUG	15P		
		DF1-15P2.5DSA		1	
J 3	8104-02264	PLUG	2P		
		DF1-2P2.5DSA		1	
J 4		NOT ASSIGNED			
J 5		NOT ASSIGNED			
J 6		NOT ASSIGNED			
J 7		NOT ASSIGNED			
J 8		NOT ASSIGNED			
J 9		NOT ASSIGNED			
J 10		NOT ASSIGNED			
J 11		NOT ASSIGNED			
Q 1	1359-07527	IC			
		SI-3052V		1	
Q 2	1359-07527	IC			
		SI-3052V		1	
Q 3	1381-13001	IC			
		SI-3122V		1	
Q 4		IC			
		μPC16312HF		1	
Q 5		IC			
		μPC16312HF		1	
Q 6		RECTIFILER			
		RB-402-LFD		1	
Q 7		DIODE			
		D5FB20		1	
Q 8		DIODE			
		D5FB20		1	
Q 9		RECTFIER			
		S4VB60-4002L10		1	
Q 10	1353-01512	IC			
		μPC151C		1	

Dep.

○ : Selected at factory

DRAWING No. 44UA737 2/3

No.0073-1988.11

ANRITSU CORP.

Parts List of: A5 POWER SUPPLY

Ref. No.	Part Code	Description	Rating	Qty	Note
R 1	4171-J0103	CARBON FILM RES	10KΩ		
		ARD25T103J	± 5%.1/4W	1	
R 2	4171-J0103	CARBON FILM RES	10KΩ		
		ARD25T103J	± 5%.1/4W	1	
R 3	4171-J0103	CARBON FILM RES	10KΩ		
		ARD25T103J	± 5%.1/4W	1	
R 4	4171-J0103	CARBON FILM RES	10KΩ		
		ARD25T103J	± 5%.1/4W	1	
R 5	4171-J0103	CARBON FILM RES	10KΩ		
		ARD25T103J	± 5%.1/4W	1	
R 6	4171-J0472	CARBON FILM RES	4.7KΩ		
		ARD25T472J	± 5%.1/4W	1	
R 7	4171-J0472	CARBON FILM RES	4.7KΩ		
		ARD25T472J	± 5%.1/4W	1	
R 8	4171-J0103	CARBON FILM RES	10KΩ		
		ARD25T103J	± 5%.1/4W	1	

Dep.

○ : Selected at factory

DRAWING No. 44UA737 1/1

No.0073-1988.11

ANRITSU CORP.

Parts List of: A6 GP-IB CONNECTOR BOARD 8

Ref. No.	Part Code	Description	Rating	Qty	Note
J 1		CABLE			
		CNF23-34D-AA030S		1	
J 2		CABLE			
		57-20240-803S		1	
S 1		SWITCH			
		DISS0A		1	
S 2		SWITCH			
		DISS4A		1	

Dep.

○ : Selected at factory

DRAWING No. 44UA738 1/1

No.0073-1988.11

ANRITSU CORP.

Parts List of: A7 RS-232C (OPTION 01) 9

Ref. No.	Part Code	Description	Rating	Qty	Note
C 1		CER CAP CK73381H104K		1	
C 2		CER CAP CK73381H104K		1	
C 3		CER CAP CK73381H104K		1	
C 4		CER CAP CK73381H104K		1	
C 5		CER CAP CK73381H104K		1	
C 6		CER CAP CK73381H104K		1	
C 7		CER CAP CK73381H104K		1	
C 8		AL ELECTLT CAP CE04C1A221A	220μF ±20%,10V	1	
C 9		CER CAP CK73381H104K		1	
C 10		NOT ASSIGNED			
C 11		CER CAP CK73381H104K		1	
C 12		AL ELECTLT CAP CE04C1H2R2A	2.2μF ±20%,50V	1	
C 13		CER CAP CK73381H104K		1	
C 14		CER CAP CK73381H104K		1	
C 15		CER CAP CK73381H104K		1	
C 16		CER CAP CK73381H104K		1	
C 17		CER CAP CK73381H104K		1	
C 18		CER CAP CK73381H104K		1	
C 19		CER CAP CK73381H104K		1	
C 20		CER CAP CK73381H104K		1	
C 21		CER CAP CK73381H104K		1	
C 22		CER CAP CK73381H104K		1	
C 23		CER CAP CK73381H104K		1	

* Selected at factory

DRAWING No. 66W05079 1/7

No.0073-1988.11

ANRITSU CORP.

Parts List of: A7 RS-232C (OPTION 01)

Ref. No.	Part Code	Description	Rating	Qty	Note
C 24		CER CAP CK73381H104K		1	
C 25		CER CAP CK73381H104K		1	
C 26		CER CAP CK73381H104K		1	
C 27		CER CAP CC732CH1H151J (E b	150p F ± 5%,50V	1	
C 28		CER CAP CK73381H104K		1	
C 29		NOT ASSIGNED			
C 30		NOT ASSIGNED			
C 31		CER CAP CK73381H104K		1	
C 32		CER CAP CK73381H104K		1	
C 33		CER CAP CK73381H104K		1	
C 34		CER CAP CK73381H104K		1	
C 35		CER CAP CK73381H104K		1	
C 36		CER CAP CK73381H104K		1	
C 37		CER CAP CK73381H104K		1	
C 38		CER CAP CK73381H104K		1	
C 39		CER CAP CK73381H104K		1	
C 40		CER CAP CK73381H104K		1	
C 41		CER CAP CK73381H104K		1	
C 42		CER CAP CK73381H104K		1	
C 43		CER CAP CK73381H104K		1	
C 44		AL ELECTLT CAP CE04C1E470A	47μF ±20%,25V	1	
C 45		CER CAP CK73381H104K		1	
C 46		CER CAP CK73381H104K		1	

* Selected at factory

DRAWING No. 66W05079 2/7

No.0073-1988.11

ANRITSU CORP.

Parts List of: A7 RS-232C (OPTION 01)

Ref. No.	Part Code	Description	Rating	Qty	Note
C 47		CER CAP CK73381H104K		1	
C 48		CER CAP CK73381H104K		1	
C 49		CER CAP CK73381H104K		1	
C 50		CER CAP CK73381H104K		1	
C 51		CER CAP CK73381H104K		1	
C 52		CER CAP CK73381H104K		1	
C 53		CER CAP CK73381H104K		1	
C 54		CER CAP CK73381H104K		1	
C 55		CER CAP CK73381H104K		1	
C 56		CER CAP CK73381H104K		1	
C 57		CER CAP CK73381H104K		1	
C 58		CER CAP CK73381H104K		1	
J 1		PLUG DF1-8P2.5DS	8P	1	
J 2		RECEPTACLE HIF3H-60DA-2.54DSA		1	
Q 1		IC LH0080A		1	W/SOCKET
Q 2		IC 74LS244F		1	
Q 3		IC 74LS244F		1	
Q 4		IC 74LS245F		1	
Q 5		IC 74LS42F		1	
Q 6		IC EPROM32KX8-15C		1	W/SOCKET

* Selected at factory

DRAWING No. 66W05079 3/7

No.0073-1988.11

ANRITSU CORP.

Parts List of: A7 RS-232C (OPTION 01)

Ref. No.	Part Code	Description	Rating	Qty	Note
Q 7	1319-18133	IC SRAM8K×8-C		1	
Q 8		IC TL7705CPS-8		1	
Q 9		IC 74LS04F		1	
Q 10		IC 74LS08F		1	
Q 11		NOT ASSIGNED			
Q 12		IC 74LS08F		1	
Q 13		IC 74LS32F		1	
Q 14		IC 74LS74AF		1	
Q 15		IC 74LS155F		1	
Q 16		IC 74LS74AF		1	
Q 17		IC 74LS244F		1	
Q 18		IC 74LS32F		1	
Q 19		IC 74LS00F		1	
Q 20		IC 74LS14F		1	
Q 21		IC 74LS32F		1	
Q 22		IC 74LS138F		1	
Q 23		IC 74LS244F		1	
Q 24		IC μPD71059C-/10		1	
Q 25		IC 74LS138F		1	
Q 26		IC 74LS245F		1	
Q 27		IC 74LS00F		1	
Q 28		IC LN28RP		1	
Q 29		IC LN28RP		1	

* Selected at factory

DRAWING No. 66W05079 4/7

No.0073-1988.11

ANRITSU CORP.

Parts List of: A7 RS-232C (OPTION 01)

Ref. No.	Part Code	Description	Rating	Qty	Note
Q 30		IC LM339P		1	
Q 31		IC 74LS240F		1	
Q 32		IC μPD8251AFC		1	
Q 33		IC SN75188N		1	
Q 34		IC SN75189AN		1	
Q 35		IC 74LS04F		1	
Q 36		IC COM8146		1	
Q 37		IC 74LS74AF		1	
Q 38		NOT ASSIGNED			
Q 39		NOT ASSIGNED			
Q 40		IC 74LS32F		1	
Q 41		IC 74LS245F		1	
Q 42		IC 74LS541F		1	
Q 43		IC 74LS541F		1	
Q 44	1319-18133	IC SRAM8K×8-C		1	
Q 45		IC 74LS245F		1	
Q 46		IC 74LS541F		1	
Q 47		IC 74LS541F		1	
Q 48		IC 74LS138F		1	
Q 49		IC 74LS74AF		1	
Q 50		IC 74LS08F		1	
Q 51		IC 74LS161F		1	
Q 52		IC 74LS125F		1	

* : Selected at factory

DRAWING No. 44W95079 5/7

ANRITSU CORP.

Parts List of: A7 RS-232C (OPTION 01)

Ref. No.	Part Code	Description	Rating	Qty	Note
Q 53		IC 74LS32F		1	
Q 54		NOT ASSIGNED			
Q 55		IC LM339P		1	
Q 56		IC LM339P		1	
R 1		RES ARRAY RRS-6-103JA	10kΩ ± 5%	1	
R 2		NOT ASSIGNED			
R 3		CERMET RESISTOR RK73M2A103J	10kΩ ± 5%,1/10W	1	
R 4		NOT ASSIGNED			
R 5		RES ARRAY RRS-6-103JA	10kΩ ± 5%	1	
R 6		CERMET RESISTOR RK73M2A821J	820Ω ± 5%,1/10W	1	
R 7		CERMET RESISTOR RK73M2A821J	820Ω ± 5%,1/10W	1	
R 8		CERMET RESISTOR RK73M2A821J	820Ω ± 5%,1/10W	1	
R 9		RES ARRAY RRS-8-472JA	4.7kΩ ± 5%	1	
R 10		RES ARRAY RRS-8-472JA	4.7kΩ ± 5%	1	
R 11		RES ARRAY RRS-8-472JA	4.7kΩ ± 5%	1	
R 12		RES ARRAY RRS-8-103JA	10kΩ ± 5%	1	
R 13		CERMET RESISTOR RK73M2A472J	4.7kΩ ± 5%,1/10W	1	
R 14		CERMET RESISTOR RK73M2A332J	3.3kΩ ± 5%,1/10W	1	
R 15		CERMET RESISTOR RK73M2A472J	4.7kΩ ± 5%,1/10W	1	
R 16		CERMET RESISTOR RK73M2A821J	820Ω ± 5%,1/10W	1	
R 17		CERMET RESISTOR RK73M2A821J	820Ω ± 5%,1/10W	1	
R 18		RES ARRAY RRS-6-103JA	10kΩ ± 5%	1	

* : Selected at factory

DRAWING No. 44W95079 6/7

ANRITSU CORP.

Parts List of: A7 RS-232C (OPTION 01)

Ref. No.	Part Code	Description	Rating	Qty	Note
R 19		RES ARRAY RRS-8-103JA	10kΩ ± 5%	1	
R 20		METAL FILM RESISTOR RN14K2E2001D	2k Ω ± 0.5%,1/4W	1	
S 1		SWITCH DISS8A		1	
S 2		SWITCH DISS8A		1	
S 3		SWITCH DISS4A		1	
X 1		XTAL 34X73400		1	
Z 1		XTAL OSC EXO-3C16MHZ		1	

* : Selected at factory

DRAWING No. 44W95079 7/7

ANRITSU CORP.

Parts List of: AE4510B 11
DMSA RX
OVERALL

Ref. No.	Part Code	Description	Rating	Qty	Note
A 1		LOCAL OSC		1	44W86741
A 2		RF INPUT & IF AMP PC BOARD		1	44W86742
A 3		IF BPF & LOG & DET BOARD 422U13564		1	44W86743
A 4		DELAY & PHASE DETEC BOARD 422U13586		1	44W86744
A 5		NOT ASSIGN			
A 6		CPU & A/D 422U13590		1	44W86746
A 7		HORIZONTAL 422U13594		1	44W86747
A 8		CRT CONTROL 422U13596		1	44W86748
A 9		FRONT BOARD 422U13598		1	44W86749
A 10		LED BOARD 422U13598		1	44W86750
A 11		FILTER 422U89797		1	44W86751
A 12		MOTHER BOARD BOARD 422U13600		1	44W86752
A 13		GP-IB CONNECTOR BOA PC BOARD 422U35477		1	44W86753
A 14		CRT QB0881A-01 CRT		1	
A 15		POWER SUPPLY UNIT		1	
A 16		RS-232C BOARD			(OPTION) 44W95081
F 1		FUSE TSA250V	5A.250V	1	
F 2		FUSE TSA250V	5A.250V	1	
G 1		FAN FBK-06A12H		1	
G 2		FAN MME-12B12DL-R			

DRAWING No. 44W86740 -02 1/2

ANRITSU CORP.

Ref. No.	Part Code	Description	Rating	Qty	Note
J 1		JACK BNC-PJ608		1	IF INPUT
J 2		JACK KC-LP003		1	
J 3		JACK BNC-PJ608		1	SUB IF INPUT
J 4		PLUG KC-LP003		1	
J 5		PLUG BNC-PJ2-NI		1	1ST LOCAL OUTPUT
J 6		PLUG SMA-P-3T-NI(8)		1	
J 7		NOT ASSIGN			
J 8		NOT ASSIGN			
J 9					
J 10		SEMI-RIGID CABLE SEMI-RIGID CABLE		1 1	
J 11		JACK DF1-5S2.5R28		1	
J 12		JACK DF1-2S2.5R24		1	
J 13		JACK DF1-2S2.5R28		1	
J 14		JACK DF1-8S2.5R28		1	
J 15		NOT ASSIGN			
J 16		INLET NC-16S		1	
J 17		EARTH PLATE 44E87532		1	
J 18		NOT ASSIGN			
J 19		PLUG BNC-R-NI		1	
J 20		PLUG BNC-R-NI		1	
J 21		PLUG BNC-R-NI		1	

* Selected at factory

DRAWING No. 44W86740 -03 2/3

ANRITSU CORP.

Ref. No.	Part Code	Description	Rating	Qty	Note
R 1	4171-J010S	CARBON FILM RES ARD2ST105J	1.0MΩ ± 5%.1/4W	1	
S 1		SWITCH ESB98S82V		1	
W 1		CABLE 27DP-P-LP	10CM	1	
W 2		CABLE 27DP-P-LP	10CM	1	
W 3		CABLE 27DP-P-LP	30CM	1	
W 4		CABLE 27DP-P-LP	50CM	1	
W 5		CABLE 27DP-P-P	25CM	1	
W 6		CABLE 27DP-P-P	40CM	1	
W 7		NOT ASSIGN			
W 8		NOT ASSIGN			
W 9		CABLE DF1-15S-2.5R24-32C-		1	
W 10		CABLE 342J108905 DF1(Y)	24CM	1	
W 11		CABLE DF1-10S-2.5R24-20C-		1	
W 12		CABLE 342W9834S DF1(Y)	21CM/18CM	1	
W 13		NOT ASSIGN			
W 14		CABLE DF1-5S-2.5R24-16C-1		1	
Z 1		NOISE FILTER MBW-1203-22		1	

* Selected at factory

DRAWING No. 44W86740 -03 3/3

ANRITSU CORP.

Parts List of: ME4510B 12
RX
A1 LOCAL

Ref. No.	Part Code	Description	Rating	Qty	Note
A 1		BOARD 422U13576 A1-A1 VCO-1		1	44W87141
A 2		BOARD 422U13576 A1-A2 LOCAL AMP		1	44W87142
A 3		BOARD 422U13576 A1-A3 PLL-1		1	44W87143
A 4		BOARD 422U13576 A1-A4 VCO-2		1	44W87144
A 5		AMP PC BOARD 422U13 A1-A5 2MHZ STEP PLL		1	44W87145
A 6		NOT ASSIGN			
A 7		BOARD 422U13576 A1-A7 VCO-3		1	44W87147
A 8		BOARD 422U13576 A1-A8 AFC-3		1	44W87148
A 9		PC BOARD 422U13578 A1-A9 CONTROLLER		1	44W87149
C 1		CER DFT301-801X7R102S50		1	
C 2		CER DFT301-801X7R102S50		1	
C 3		CER DFT301-801X7R102S50		1	
C 4		CER DFT301-801X7R102S50		1	
C 5		CER DFT301-801X7R102S50		1	
C 6		CER DFT301-801X7R102S50		1	
C 7		CER DFT301-801X7R102S50		1	
C 8		CER DFT301-801X7R102S50		1	
C 9		CER DFT301-801X7R102S50		1	
C 10		CER DFT301-801X7R102S50		1	
C 11		CER DFT301-801X7R102S50		1	
C 12		NOT ASSIGN			
C 13		CER DFT301-801X7R102S50		1	

* Selected at factory

DRAWING No. 44W86741 -01 1/3

ANRITSU CORP.

Ref. No.	Part Code	Description	Rating	Qty	Note
C 14		CER DFT301-801X7R102S50		1	
C 15		CER DFT301-801X7R102S50		1	
C 16		CER DFT301-801X7R102S50		1	
C 17		NOT ASSIGN			
C 18		CER DFT301-801X7R102S50		1	
C 19		CER DFT301-801X7R102S50		1	
C 20		CER DFT301-801X7R102S50		1	
C 21		NOT ASSIGN			
C 22		NOT ASSIGN			
C 23		CER DFT301-801X7R102S50		1	
C 24		CER DFT301-801X7R102S50		1	
C 25		CER DFT301-801X7R102S50		1	
C 26		CER DFT301-801X7R102S50		1	
C 27		NOT ASSIGN			
E 1		TERMINAL WTB-1		1	
E 2		TERMINAL WTB-1		1	
J 1		PLUG (DIN41612-90PB)		1	REFER TO A1-A9
J 2		RECEPTACLE SMA-LR2-NI(12)		1	
J 3		RECEPTACLE SMA-LR2-NI(12)		1	
J 4		NOT ASSIGN			
J 5		RECEPTACLE (2PDP-LR-PC)		1	REFER TO A1-A9

* Selected at factory

DRAWING No. 44W86741 -01 2/3

ANRITSU CORP.

Parts List of: A1-A1 VC0-1 13

Ref. No.	Part Code	Description	Rating	Qty	Note
J 6		PLUG	15P		REFER TO
		(DF1-15P2.5DS)		1	A1-A3
J 7		PLUG	8P		REFER TO
		(DF1-8P2.5DS)		1	A1-A8
J 8		PLUG	5P		REFER TO
		(DF1-5P2.5DS)		1	A1-A3
J 9		PLUG	5P		REFER TO
		(DF1-5P2.5DSA)		1	A1-A9
J 10		PLUG	8P		REFER TO
		(DF1-8P2.5DSA)		1	A1-A9
J 11		PLUG	5P		REFER TO
		(DF1-5P2.5DSA)		1	A1-A9
J 12		CABLE			
		DF1-5S2.5R28-10B		1	
		JACK			
		DF1-5S2.5R28		1	
J 13		CABLE			
		DF1-15S2.5R28-10B		1	
		JACK			
		DF1-15S2.5R28		1	
J 14		CABLE			
		DF1-8S2.5R28-10A		1	
		JACK			
		DF1-8S2.5R28		1	
J 15		NOT ASSIGN			
J 16		CABLE			
		DF1-8S2.5R28-10B		1	
		JACK			
		DF1-8S2.5R28		1	
J 17		CABLE			
		DF1-8S2.5R28-10B		1	
		JACK			
		DF1-8S2.5R28		1	
J 18		CABLE			
		DF1-5S2.5R28-10B		1	
		JACK			
		DF1-5S2.5R28		1	
J 19		PLUG	8P		REFER TO
		(DF1-8P2.5DSA)		1	A1-A9
J 20		NOT ASSIGN			
J 21		CABLE			
		DF1-5S2.5R28-10B		1	
		JACK			
		DF1-5S2.5R28		1	

Rev. No./Date

DESIGNED BY

APPROVED BY

Dep.

* : Selected at factory

DRAWING No. 44W86741 -01

3/3

No.0073-1988.11

ANRITSU CORP.

Ref. No.	Part Code	Description	Rating	Qty	Note
C 1		CER CAP	2p F.50V		
		CC732CK1H020C (H b	± 0.25p F	1	
C 2		CER CAP	10p F		
		CC732CH1H100D (A b	± 0.5%.50V	1	
C 3		CER CAP	10p F.50V		
		CC732CH1H100D (A b	± 0.5p F	1	
C 4		CER CAP	8p F.50V		
		CC732CH1H080D (t b	± 0.5p F	1	
C 5		CER CAP	10p F.50V		
		CC732CH1H100D (A b	± 0.5p F	1	
C 6	2387-02958	CER CAP	7p F.50V		
		CC732CH1H070D (n b	± 0.5p F	1	
C 7	2387-10262	CER CAP	0.1μ F.50V		
		CK733F1H104Z (A 5	+80/-20%	1	
C 8		CER CAP			
		CC733CH1H102J (¯ b		1	
C 9		CER CAP			
		CC733CH1H102J (¯ b		1	
C 10		CER CAP	0.5p F.50V		
		CC732CK1H0R5C (f b	± 0.25p F	1	
C 11		CER CAP	1p F.50V		
		CC732CK1H010C (A b	± 0.25p F	1	
C 12		CER CAP	2p F.50V		
		CC732CK1H020C (H b	± 0.25p F	1	
C 13		CER CAP	0.5p F.50V		
		CC732CK1H0R5C (f b	± 0.25p F	1	
C 14		CER CAP	4p F.50V		
		CC732CH1H040D (d b	± 0.5p F	1	
C 15		TA ELECTLT CAP	15μ F		
		CS734E1D156M	± 20%.20V	1	
C 16	2387-02988	CER CAP			
		CC733CH1H102J (¯ b		1	
C 17		CER CAP	0.5p F.50V		
		CC732CK1H0R5C (f b	± 0.25p F	1	
C 18	2387-10262	CER CAP	0.1μ F.50V		
		CK733F1H104Z (A 5	+80/-20%	1	
C 19		CER CAP	10p F		
		CC732CH1H100D (A b	± 0.5%.50V	1	
C 20	2387-10262	CER CAP	0.1μ F.50V		
		CK733F1H104Z (A 5	+80/-20%	1	
C 21	2387-02988	CER CAP			
		CC733CH1H102J (¯ b		1	
C 22	2387-02988	CER CAP			
		CC733CH1H102J (¯ b		1	
C 23		AL ELECTLT CAP	220μ F		
		CE04C1E221A	± 20%.25V	1	

Rev. No./Date

DESIGNED BY

APPROVED BY

CHECKED BY

Dep.

* Selected at factory

DRAWING No. 44W87141

1/3

No.0073-1988.11

ANRITSU CORP.

Parts List of: A1-A1 VC0-1

Ref. No.	Part Code	Description	Rating	Qty	Note
L 1		INDUCTOR	0.22μ H ± 10%		
		NL322522-R22K		1	
L 2		CABLE,RESONATOR			
		UT-85A		1	
L 3					
		PATTERN COIL			
L 4					
		PATTERN COIL			
L 5		NOT ASSIGNED			
L 6		INDUCTOR	0.47μ H ± 10%		
		NL322522-R47K		1	
L 7		INDUCTOR	100μ H, ± 10%		
		NL453232-101K		1	
Q 1		DI			
		1S2208		1	
Q 2		TRANSISTOR			
		2SC3603		1	
Q 3		TRANSISTOR			
		2SC3603		1	
Q 4		ZENER DIODE			
		RD2.7MB (27F,)		1	
Q 5		NOT ASSIGNED			
Q 6		DII			
		MWA330		1	
R 1		CERMET RESISTOR	820Ω		
		RK73M2A821J	± 5%.1/10W	1	
R 2		CERMET RESISTOR	470Ω		
		RK73M2A471J	± 5%.1/10W	1	
R 3		CERMET RESISTOR	22kΩ		
		RK73M2A223J	± 5%.1/10W	1	
R 4		CERMET RESISTOR	4.7kΩ		
		RK73M2A472J	± 5%.1/10W	1	
R 5		CERMET RESISTOR	22kΩ		
		RK73M2A223J	± 5%.1/10W	1	
R 6		CERMET RESISTOR	22kΩ		
		RK73M2A223J	± 5%.1/10W	1	
R 7		CERMET RESISTOR	51Ω		
		RK73M2A510J	± 5%.1/10W	1	

DESIGNED BY

APPROVED BY

Dep.

* Selected at factory

DRAWING No. 44W87141

1/3

No.0073-1988.11

ANRITSU CORP.

Parts List of: A1-A1 VC0-1

Ref. No.	Part Code	Description	Rating	Qty	Note
R 8		CERMET RESISTOR	220Ω		
		RK73M2A221J	± 5%.1/10W	1	
R 9		CERMET RESISTOR	180Ω		
		RK73M2A181J	± 5%.1/10W	1	
R 10		CERMET RESISTOR	33Ω		
		RK73M2A330J	± 5%.1/10W	1	
R 11		CERMET RESISTOR	180Ω		
		RK73M2A181J	± 5%.1/10W	1	
R 12		CERMET RESISTOR	10Ω		
		RK73M2A100J	± 5%.1/10W	1	
R 13		CERMET RESISTOR	820Ω		
		RK73M2A821J	± 5%.1/10W	1	
R 14		MF			
		RS1FS121JL		1	
R 15		CERMET RESISTOR	47Ω		
		RK73M2A470J	± 5%.1/10W	1	
R 16		CERMET RESISTOR	47Ω		
		RK73M2A470J	± 5%.1/10W	1	

DESIGNED BY

APPROVED BY

CHECKED BY

Dep.

* Selected at factory

DRAWING No. 44W87141

3/3

No.0073-1988.11

ANRITSU CORP.

Parts List of: A1-A2 LOCAL AMP 13

Ref. No.	Part Code	Description	Rating	Qty	Note
C 1		CER CAP			
		CC732CH1H102J		1	
C 2		CER CAP			
		CC732CH1H102J		1	
C 3		CER CAP			
		CC732CH1H102J		1	
C 4		CER CAP			
		CC732CH1H102J		1	
C 5		CER CAP			
		CC732CH1H102J		1	
C 6		CER CAP			
		CC732CH1H102J		1	
C 7	2387-10262	CER CAP	0.1μF,50V		
		CK733F1H104Z (A 5	+80/-20%	1	
C 8	2387-10262	CER CAP	0.1μF,50V		
		CK733F1H104Z (A 5	+80/-20%	1	
C 9	2387-10262	CER CAP	0.1μF,50V		
		CK733F1H104Z (A 5	+80/-20%	1	
C 10		NOT ASSIGNED			
C 11	2387-10262	CER CAP	0.1μF,50V		
		CK733F1H104Z (A 5	+80/-20%	1	
L 1		INDUCTOR	0.47μH± 10%		
		NL322522-R47K		1	
L 2		INDUCTOR	0.47μH± 10%		
		NL322522-R47K		1	
L 3		INDUCTOR	0.47μH± 10%		
		NL322522-R47K		1	
Q 1		IC			
		MWA330		1	
Q 2		IC			
		MWA330		1	
Q 3		IC			
		MWA320		1	
R 1		NOT ASSIGNED			
R 2		NOT ASSIGNED			

Dep.

* : Selected at factory

DRAWING No. 44W87142 -02

1/2

No.0073-1988.11

ANRITSU CORP.

Parts List of: A1-A2 LOCAL AMP

Ref. No.	Part Code	Description	Rating	Qty	Note
R 3		CERMET RESISTOR	470Ω		
		RK73M2A471J	± 5%,1/10W	1	
R 4		CERMET RESISTOR	56Ω		
		RK73M2A560J	± 5%,1/10W	1	
R 5		CERMET RESISTOR	4.7Ω		
		RK73M2A4R7J	± 5%,1/10W	1	
R 6		MF			
		RS1FS121JL		1	
R 7		MF			
		RS1FS121JL		1	
R 8		MF			
		RS1FS391JL		1	
R 9		METAL FILM RESISTOR	12Ω		
		RN73G2A12DD	± 0.5%,1/10W	1	
R 10		METAL FILM RESISTOR	430Ω		
		RN73G2A431D	± 0.5%,1/10W	1	
R 11		METAL FILM RESISTOR	430Ω		
		RN73G2A431D	± 0.5%,1/10W	1	

Dep.

* : Selected at factory

DRAWING No. 44W87142 -02

2/2

No.0073-1988.11

ANRITSU CORP.

Parts List of: ME4510B 13
DMSA RX
A1-A3 PLL-1

Ref. No.	Part Code	Description	Rating	Qty	Note
C 1		CER CAP			
		CC732CH1H102J		1	
C 2		CER CAP			
		CC732CH1H102J		1	
C 3		CER CAP			
		CC732CH1H102J		1	
C 4		CER CAP	0.1μF,50V		
		CK733F1H104Z	+80/-20%	1	
C 5		CER CAP	0.1μF,50V		
		CK733F1H104Z	+80/-20%	1	
C 6		CER CAP	27p F		
		CC732CH1H270J	± 5%,50V	1	
C 7		CER CAP	0.01μF		
		CK732B1H103K	± 10%,50V	1	
C 8		CER CAP	0.01μF		
		CK732B1H103K	± 10%,50V	1	
C 9		CER CAP	220p F		
		CC732CH1H221J	± 5%,50V	1	
C 10		CER CAP	220p F		
		CC732CH1H221J	± 5%,50V	1	
C 11		AL ELECTLT CAP	100μF		
		CE04C1E101A	± 20%,25V	1	
C 12		CER CAP	0.01μF		
		CK732B1H103K	± 10%,50V	1	
C 13		CER CAP	0.1μF,50V		
		CK733F1H104Z	+80/-20%	1	
C 14		CER CAP	0.1μF,50V		
		CK733F1H104Z	+80/-20%	1	
C 15		CER CAP	0.1μF,50V		
		CK733F1H104Z	+80/-20%	1	
C 16		CER CAP	0.1μF,50V		
		CK733F1H104Z	+80/-20%	1	
C 17		CER CAP	0.1μF,50V		
		CK733F1H104Z	+80/-20%	1	
C 18		CER CAP	0.1μF,50V		
		CK733F1H104Z	+80/-20%	1	
C 19		CER CAP	22p F		
		CC732CH1H220J	± 5%,50V	1	
C 20		CER CAP	0.22μF		
		CK737B1H224K	± 10%,50V	1	
C 21		CER CAP	0.22μF		
		CK737B1H224K	± 10%,50V	1	
C 22		CER CAP	0.1μF,50V		
		CK733F1H104Z	+80/-20%	1	
C 23		CER CAP	0.1μF,50V		
		CK733F1H104Z	+80/-20%	1	

Dep.

* : Selected at factory

DRAWING No. 44W87143 -05

1/9

ANRITSU CORP.

Ref. No.	Part Code	Description	Rating	Qty	Note
C 24		CER CAP	2200p F		
		CK732B1H222K	± 10%,50V	1	
C 25		CER CAP	2200p F		
		CK732B1H222K	± 10%,50V	1	
C 26		NOT ASSIGN			
C 27		CER CAP			
		CK732B1H223K		1	
C 28		CER CAP			
		CK732B1H223K		1	
C 29		NOT ASSIGN			
C 30		PLSTC FILM CAP	0.1μF		
		ECQ-V1H104JW	± 5%,50V	1	
C 31		CER CAP	47p F		
		CC732CH1H470J	± 5%,50V	1	
C 32		CER CAP	47p F		
		CC732CH1H470J	± 5%,50V	1	
C 33		CER CAP	82p F		
		CC732CH1H820J	± 5%,50V	1	
C 34		CER CAP	82p F		
		CC732CH1H820J	± 5%,50V	1	
C 35		CER CAP	47p F		
		CC732CH1H470J	± 5%,50V	1	
C 36		CER CAP			
		CC732CH1H102J		1	
C 37		CER CAP			
		CC732CH1H102J		1	
C 38		CER CAP	0.1μF,50V		
		CK733F1H104Z	+80/-20%	1	
C 39		TA ELECTLT CAP	47μF		
		CS735E1A476M	± 20%,10V	1	
C 40		TA ELECTLT CAP	47μF		
		CS735E1A476M	± 20%,10V	1	
C 41		TA ELECTLT CAP			
		CC732CH1H102J		1	
C 42		CER CAP	0.1μF,50V		
		CK733F1H104Z	+80/-20%	1	
C 43		CER CAP	150p F		
		CC732CH1H151J	± 5%,50V	1	
C 44		CER CAP	150p F		
		CC732CH1H151J	± 5%,50V	1	
C 45		CER CAP	0.1μF,50V		
		CK733F1H104Z	+80/-20%	1	
C 46		CER CAP	0.1μF,50V		
		CK733F1H104Z	+80/-20%	1	

* : Selected at factory

DRAWING No. 44W87143 -05

2/9

ANRITSU CORP.

Ref. No.	Part Code	Description	Rating	Qty	Note
C 47		CER CAP	220p F		
		CC732CH1H221J	± 5%,50V	1	
C 48		CER CAP	220p F		
		CC732CH1H221J	± 5%,50V	1	
C 49		TA ELECTLT CAP	22μ F		
		CS733E1A226M	± 20%,10V	1	
C 50		TA ELECTLT CAP	22μ F		
		CS733E1A226M	± 20%,10V	1	
C 51		CER CAP	0.1μ F,50V		
		CK733F1H104Z	+80/-20%	1	
C 52		CER CAP	0.1μ F,50V		
		CK733F1H104Z	+80/-20%	1	
C 53		CER CAP	0.1μ F,50V		
		CK733F1H104Z	+80/-20%	1	
C 54		CER CAP	0.1μ F,50V		
		CK733F1H104Z	+80/-20%	1	
C 55		CER CAP	0.1μ F,50V		
		CK733F1H104Z	+80/-20%	1	
C 56		CER CAP	0.1μ F,50V		
		CK733F1H104Z	+80/-20%	1	
C 57		CER CAP	0.1μ F,50V		
		CK733F1H104Z	+80/-20%	1	
C 58		NOT ASSIGN			
C 59		AL ELECTLT CAP	10μ F		
		CE04C1H100A	± 20%,50V	1	
C 60		AL ELECTLT CAP	33μ F		
		CE04C1V330A	± 20%,35V	1	
C 61		AL ELECTLT CAP	220μ F		
		CE04C1A221A	± 20%,10V	1	
C 62		AL ELECTLT CAP	33μ F		
		CE04C1V330A	± 20%,35V	1	
C 63		NOT ASSIGN			
C 64		CER CAP	0.1μ F		
		CK733B1H104K	± 10%,50V	1	
C 65		CER CAP	0.1μ F		
		CK733B1H104K	± 10%,50V	1	
C 66		NOT ASSIGN			
C 67		NOT ASSIGN			
C 68		PLSTC FILM CAP	0.68μ F		
		ECQ-V1H684JW	± 5%,50V	1	
C 69		PLSTC FILM CAP	47000p F		
		ECQ-V1H473JW	± 5%,50V	1	

*: Selected at factory

DRAWING No. 44W87143 -05 3/9

ANRITSU CORP.

Ref. No.	Part Code	Description	Rating	Qty	Note
C 70		PLSTC FILM CAP	0.1μ F		
		ECQ-V1H104JW	± 5%,50V	1	
C 71		AL ELECTLT CAP	47μ F		
		CE04C1E470A	± 20%,25V	1	
C 72		AL ELECTLT CAP	47μ F		
		CE04C1E470A	± 20%,25V	1	
J 1		NOT ASSIGN			
J 2		NOT ASSIGN			
J 3		NOT ASSIGN			
J 4		NOT ASSIGN			
J 5		NOT ASSIGN			
J 6		PLUG	15P		
		DF1-15P-2.5DS		1	
L 1		INDUCTOR	1.0mH.± 10%		
		NL453232-102K		1	
L 2		INDUCTOR			
		34L74431D		1	
L 3		INDUCTOR	0.22μ H± 10%		
		NL322522-R22K		1	
L 4		INDUCTOR	0.15μ H± 10%		
		NL322522-R15K		1	
L 5		INDUCTOR	47μ H.± 10%		
		NL453232-470K		1	
L 6		INDUCTOR	47μ H.± 10%		
		NL453232-470K		1	
L 7		INDUCTOR	47μ H.± 10%		
		NL453232-470K		1	
L 8		INDUCTOR			
		FS0810-120K		1	
L 9		INDUCTOR			
		FS0810-120K		1	
Q 1		IC			
		μ PBS97CX		1	

*: Selected at factory

DRAWING No. 44W87143 -05 4/9

ANRITSU CORP.

Ref. No.	Part Code	Description	Rating	Qty	Note
Q 2		DIODE			
		1S2835		1	
Q 3		DI			
		2SC2351		1	
Q 4		IC			
		74HC74F		1	
Q 5		IC			
		74121		1	
Q 6		TR,TWIN			
		μ PA39A		1	
Q 7		TR			
		2SC1623		1	
Q 8		IC			
		LT1013DS8		1	
Q 9		IC			
		μ PD5201G		1	
Q 10		IC			
		LM833M		1	
Q 11		IC			
		LM833M		1	
Q 12		IC			
		LM833M		1	
Q 13		IC			
		μ PD5201G		1	
Q 14		DIODE			
		1SS123		1	
Q 15		IC			
		μ PC1652G		1	
Q 16		DIODE			
		1S2835		1	
Q 17		IC			
		MC12040L		1	
Q 18		IC			
		LM833M		1	
Q 19		IC			
		μ PC649C		1	
Q 20		IC			
		μ PD5201G		1	
Q 21		NOT ASSIGN			
Q 22		IC			
		μ PC1631H		1	
Q 23		IC			
		μ PC1430SH		1	
Q 24		DIODE			
		1SZ52		1	

*: Selected at factory

DRAWING No. 44W87143 -05 5/9

ANRITSU CORP.

Ref. No.	Part Code	Description	Rating	Qty	Note
Q 25		DIODE			
		1S953		1	
Q 26		ZENER DIODE			
		RD2.7EB		1	
R 1		CERMET RESISTOR	82Ω		
		RK73M2A820J	± 5%,1/10W	1	
R 2		CERMET RESISTOR	120Ω		
		RK73M2A121J	± 5%,1/10W	1	
R 3		CERMET RESISTOR	4.7Ω		
		RK73M2A4R7J	± 5%,1/10W	1	
R 4		CERMET RESISTOR	220Ω		
		RK73M2A221J	± 5%,1/10W	1	
R 5		CERMET RESISTOR	4.7k Ω		
		RK73M2A472J	± 5%,1/10W	1	
R 6		CERMET RESISTOR	330Ω		
		RK73M2A331J	± 5%,1/10W	1	
R 7		METAL FILM RESISTOR	12k Ω		
		RN73G2A123D	± 0.5%,1/10W	1	
R 8		CERMET RESISTOR	1k Ω		
		RK73M2A102J	± 5%,1/10W	1	
R 9		CERMET RESISTOR	1k Ω		
		RK73M2A102J	± 5%,1/10W	1	
R 10		CERMET RESISTOR	10k Ω		
		RK73M2A103J	± 5%,1/10W	1	
R 11		CERMET RESISTOR	10k Ω		
		RK73M2A103J	± 5%,1/10W	1	
R 12		CERMET RESISTOR	10k Ω		
		RK73M2A103J	± 5%,1/10W	1	
R 13		CERMET RESISTOR	10k Ω		
		RK73M2A103J	± 5%,1/10W	1	
R 14		VARIABLE RESISTOR	2k Ω		
		RG04B202H	1/4W	1	*
R 15		METAL FILM RESISTOR	2k Ω		
		RN73G2A202D	± 0.5%,1/10W	1	
R 16		METAL FILM RESISTOR	2k Ω		
		RN73G2A202D	± 0.5%,1/10W	1	
R 17		CERMET RESISTOR	2.2k Ω		
		RK73M2A222J	± 5%,1/10W	1	
R 18		METAL FILM RESISTOR	510Ω		
		RN73G2A511D	± 0.5%,1/10W	1	
R 19		CERMET RESISTOR	10k Ω		
		RK73M2A103J	± 5%,1/10W	1	
R 20		CERMET RESISTOR	1k Ω		
		RK73M2A102J	± 5%,1/10W	1	

*: Selected at factory

DRAWING No. 44W87143 -05 6/9

ANRITSU CORP.

Ref. No.	Part Code	Description	Rating	Qty	Note
R 21		VARIABLE RESISTOR	1k Ω		
		RG04B102H	1/4W	1	•
R 22		CERMET RESISTOR	4.7k Ω		
		RK73M2A472J	± 5%.1/10W	1	
R 23		CERMET RESISTOR	39k Ω		
		RK73M2A393J	± 5%.1/10W	1	
R 24		CERMET RESISTOR	10k Ω		
		RK73M2A103J	± 5%.1/10W	1	
R 25		CERMET RESISTOR	10k Ω		
		RK73M2A103J	± 5%.1/10W	1	
R 26		CERMET RESISTOR	220k Ω		
		RK73M2A224J	± 5%.1/10W	1	
R 27		METAL FILM RESISTOR	13k Ω		
		RN73G2A133D	± 0.5%.1/10W	1	
R 28		CERMET RESISTOR	10k Ω		
		RK73M2A103J	± 5%.1/10W	1	
R 29		CERMET RESISTOR	4.7k Ω		
		RK73M2A472J	± 5%.1/10W	1	
R 30		VARIABLE RESISTOR	100k Ω		
		RG04B104H	1/4W	1	•
R 31		METAL FILM RESISTOR	3.9k Ω		
		RN73G2A392D	± 0.5%.1/10W	1	
R 32		METAL FILM RESISTOR	820Ω		
		RN73G2A821D	± 0.5%.1/10W	1	
R 33		CERMET RESISTOR	1k Ω		
		RK73M2A102J	± 5%.1/10W	1	
R 34		CERMET RESISTOR	1k Ω		
		RK73M2A102J	± 5%.1/10W	1	
R 35		CERMET RESISTOR	1k Ω		
		RK73M2A102J	± 5%.1/10W	1	
R 36		CERMET RESISTOR	22k Ω		
		RK73M2A223J	± 5%.1/10W	1	
R 37		CERMET RESISTOR	12k Ω		
		RK73M2A123J	± 5%.1/10W	1	
R 38		VARIABLE RESISTOR	10k Ω		
		RG04B103H	1/4W	1	•
R 39		CERMET RESISTOR	10k Ω		
		RK73M2A103J	± 5%.1/10W	1	
R 40		CERMET RESISTOR	10k Ω		
		RK73M2A103J	± 5%.1/10W	1	
R 41		CERMET RESISTOR	22k Ω		
		RK73M2A223J	± 5%.1/10W	1	
R 42		CERMET RESISTOR	22k Ω		
		RK73M2A223J	± 5%.1/10W	1	
R 43		VARIABLE RESISTOR	10k Ω		
		RG04B103H	1/4W	1	•

• Selected at factory

DRAWING No 44W87143 -05 7/9

b 7221 1993.07

ANRITSU CORP.

Ref. No.	Part Code	Description	Rating	Qty	Note
R 44		CERMET RESISTOR	220Ω		
		RK73M2A221J	± 5%.1/10W	1	
R 45		CERMET RESISTOR	220Ω		
		RK73M2A221J	± 5%.1/10W	1	
R 46		CERMET RESISTOR	22Ω		
		RK73M2A220J	± 5%.1/10W	1	
R 47		VARIABLE RESISTOR	1k Ω		
		RG04B102H	1/4W	1	•
R 48		VARIABLE RESISTOR	500Ω		
		RG04B501H	1/4W	1	•
R 49		VARIABLE RESISTOR	500Ω		
		RG04B501H	1/4W	1	•
R 50		CERMET RESISTOR	51Ω		
		RK73M2A510J	± 5%.1/10W	1	
R 51		METAL FILM RESISTOR	150Ω		
		RN73G2A151D	± 0.5%.1/10W	1	
R 52		METAL FILM RESISTOR	1.5k Ω		
		RN73G2A152D	± 0.5%.1/10W	1	
R 53		METAL FILM RESISTOR	150Ω		
		RN73G2A151D	± 0.5%.1/10W	1	
R 54		METAL FILM RESISTOR	1k Ω		
		RN73G2A102D	± 0.5%.1/10W	1	
R 55		METAL FILM RESISTOR	510Ω		
		RN73G2A511D	± 0.5%.1/10W	1	
R 56		METAL FILM RESISTOR	510Ω		
		RN73G2A511D	± 0.5%.1/10W	1	
R 57		METAL FILM RESISTOR	510Ω		
		RN73G2A511D	± 0.5%.1/10W	1	
R 58		METAL FILM RESISTOR	510Ω		
		RN73G2A511D	± 0.3%.1/10W	1	
R 59		METAL FILM RESISTOR	510Ω		
		RN73G2A511D	± 0.5%.1/10W	1	
R 60		METAL FILM RESISTOR	82Ω		
		RN73G2A820D	± 0.5%.1/10W	1	
R 61		METAL FILM RESISTOR	430Ω		
		RN73G2A431D	± 0.5%.1/10W	1	
R 62		METAL FILM RESISTOR	2.7k Ω		
		RN73G2A272D	± 0.5%.1/10W	1	
R 63		CERMET RESISTOR	1k Ω		
		RK73M2A102J	± 5%.1/10W	1	
R 64		CERMET RESISTOR	1k Ω		
		RK73M2A102J	± 5%.1/10W	1	
R 65		CERMET RESISTOR	6.8k Ω		
		RK73M2A682J	± 5%.1/10W	1	
R 66		CERMET RESISTOR	1k Ω		
		RK73M2A102J	± 5%.1/10W	1	

• Selected at factory

DRAWING No 44W87143 -05 8/9

b TCC 1993.07

ANRITSU CORP.

Ref. No.	Part Code	Description	Rating	Qty	Note
R 67		CERMET RESISTOR	10k Ω		
		RK73M2A103J	± 5%.1/10W	1	
R 68		CERMET RESISTOR	10k Ω		
		RK73M2A103J	± 5%.1/10W	1	
R 69		CERMET RESISTOR	4.7k Ω		
		RK73M2A472J	± 5%.1/10W	1	
R 70		CERMET RESISTOR	820Ω		
		RK73M2A821J	± 5%.1/10W	1	
R 71		CERMET RESISTOR	820Ω		
		RK73M2A821J	± 5%.1/10W	1	
R 72		CERMET RESISTOR	330Ω		
		RK73M2A331J	± 5%.1/10W	1	
R 73		CERMET RESISTOR	4.7k Ω		
		RK73M2A472J	± 5%.1/10W	1	
R 74		CERMET RESISTOR	1.2k Ω		
		RK73M2A122J	± 5%.1/10W	1	
R 75		VARIABLE RESISTOR	1k Ω		
		RG04B102H	1/4W	1	•
R 76		CERMET RESISTOR	1k Ω		
		RK73M2A102J	± 5%.1/10W	1	
R 77		CERMET RESISTOR	1k Ω		
		RK73M2A102J	± 5%.1/10W	1	
R 78		CERMET RESISTOR	5.6k Ω		
		RK73M2A562J	± 5%.1/10W	1	
R 79		CERMET RESISTOR	10k Ω		
		RK73M2A103J	± 5%.1/10W	1	
R 80		NOT ASSIGN			
Z 1		MIXER			
		M-2(TO-5)		1	

• Selected at factory

DRAWING No 44W87143 -05 9/9

b 7221 1993.07

ANRITSU CORP.

Ref. No.	Part Code	Description	Rating	Qty	Note
C 1		NOT ASSIGNED			
C 2		CER CAP			
		CC732CH1H102J		1	
C 3		CER CAP	22p F		
		CC732CH1H220J (Jb	± 5%.50V	1	
C 4	2387-02955	CER CAP	4p F.50V		
		CC732CH1H040D (db	± 0.5p F	1	
C 5	2387-02955	CER CAP	4p F.50V		
		CC732CH1H040D (db	± 0.5p F	1	
C 6	2387-02988	CER CAP			
		CC733CH1H102J (¯b		1	
C 7	2387-02988	CER CAP			
		CC733CH1H102J (¯b		1	
C 8	2387-02988	CER CAP			
		CC733CH1H102J (¯b		1	
C 9		AL ELECTLT CAP	47μF		
		CE04C1H470A	± 20%.50V	1	
C 10		PLSTC FILM CAP	1μF		
		ECQ-V1H105JW	± 5%.50V	1	
C 11		CER CAP	0.1μF.50V		
		CK733F1H104Z (A5	+80/-20%	1	
C 12		CER CAP			
		CC732CH1H102J		1	
C 13		CER CAP	22p F		
		CC732CH1H220J (Jb	± 5%.50V	1	
C 14	2387-02956	CER CAP	5p F.50V		
		CC732CH1H050D (fb	± 0.5p F	1	
C 15	2387-02956	CER CAP	5p F.50V		
		CC732CH1H050D (fb	± 0.5p F	1	
C 16	2387-02988	CER CAP			
		CC732CH1H102J		1	
C 17	2387-02988	CER CAP			
		CC732CH1H102J		1	
C 18	2387-02988	CER CAP			
		CC732CH1H102J		1	
C 19		AL ELECTLT CAP	47μF		
		CE04C1H470A	± 20%.50V	1	
C 20		AL ELECTLT CAP	47μF		
		CE04C1H470A	± 20%.50V	1	
C 21		CER CAP	0.1μF.50V		
		CK733F1H104Z (A5	+80/-20%	1	

DESIGNED BY N. Nakamura

CHECKED BY

APPROVED BY

Dep.

• Selected at factory

DRAWING No 44W87144 1/4

No D073-1988 11

ANRITSU CORP.

Parts List of: A1-A4 VCO-2

Ref. No.	Part Code	Description	Rating	Qty	Note
J 1		NOT ASSIGNED			
J 2		NOT ASSIGNED			
J 3		NOT ASSIGNED			
J 4		NOT ASSIGNED			
J 5		NOT ASSIGNED			
J 6		NOT ASSIGNED			
J 7		NOT ASSIGNED			
J 8		PLUG 0F1-5P-2.50S	5P	1	
L 1		INDUCTOR NL322522-R22K	0.22μH±10%	1	
L 2		INDUCTOR 34L74431	60n H	1	
L 3		NOT ASSIGNED			
L 4		INDUCTOR 342T61287B		1	
L 5		INDUCTOR NL322522-R22K	0.22μH±10%	1	
L 6		INDUCTOR 34L74431	98n H	1	
L 7		NOT ASSIGNED			
L 8		INDUCTOR 342T61287B		1	
L 9		INDUCTOR NL453232-102K	1.0mH±10%	1	
L 10		INDUCTOR NL453232-102K	1.0mH±10%	1	
Q 1		DI.VARI-CAP 1SV166		1	
Q 2		DI.PIN 1S2208		1	
Q 3		FET 2SK152-2		1	

* Selected at factory

DRAWING No. ●●W87144 2/6

No.D073-1988.11

ANRITSU CORP.

Parts List of: A1-A4 VCO-2

Ref. No.	Part Code	Description	Rating	Qty	Note
Q 4		DIODE 1SS279		1	
Q 5		DIODE 1S2835 (A3)		1	
Q 6		DI.VARI-CAP 1SV166		1	
Q 7		DI 1S2208		1	
Q 8		FET 2SK152-2		1	
Q 9		DIODE 1SS279		1	
Q 10		DIODE 1S2835 (A3)		1	
Q 11		IC 74HC32F		1	
Q 12		NOT ASSIGNED			
Q 13		IC μPDS201G		1	
R 1		CERMET RESISTOR RK73M2A123J	12kΩ ±5%,1/10W	1	
R 2		CERMET RESISTOR RK73M2A221J	220Ω ±5%,1/10W	1	
R 3		CERMET RESISTOR RK73M2A470J	47Ω ±5%,1/10W	1	
R 4		CERMET RESISTOR RK73M2A103J	10kΩ ±5%,1/10W	1	
R 5		CERMET RESISTOR RK73M2A391J	390Ω ±5%,1/10W	1	
R 6		CERMET RESISTOR RK73M2A103J	10kΩ ±5%,1/10W	1	
R 7		CERMET RESISTOR RK73M2A682J	6.8kΩ ±5%,1/10W	1	
R 8		CERMET RESISTOR RK73M2A472J	4.7kΩ ±5%,1/10W	1	
R 9		CERMET RESISTOR RK73M2A102J	1kΩ ±5%,1/10W	1	
R 10		NOT ASSIGNED			
R 11		CERMET RESISTOR RK73M2A562J	5.6kΩ ±5%,1/10W	1	
R 12		CERMET RESISTOR RK73M2A560J	56Ω ±5%,1/10W	1	

* Selected at factory

DRAWING No. ●●W871●● 3/6

No.D073-1988.11

ANRITSU CORP.

Parts List of: A1-A4 VCO-2

Ref. No.	Part Code	Description	Rating	Qty	Note
R 13		CERMET RESISTOR RK73M2A470J	47Ω ±5%,1/10W	1	
R 14		CERMET RESISTOR RK73M2A103J	10kΩ ±5%,1/10W	1	
R 15		CERMET RESISTOR RK73M2A391J	390Ω ±5%,1/10W	1	
R 16		CERMET RESISTOR RK73M2A103J	10kΩ ±5%,1/10W	1	
R 17		CERMET RESISTOR RK73M2A682J	6.8kΩ ±5%,1/10W	1	
R 18		CERMET RESISTOR RK73M2A472J	4.7kΩ ±5%,1/10W	1	
R 19		CERMET RESISTOR RK73M2A102J	1kΩ ±5%,1/10W	1	
R 20		NOT ASSIGNED			
R 21		CERMET RESISTOR RK73M2A331J	330Ω ±5%,1/10W	1	
R 22		CERMET RESISTOR RK73M2A331J	330Ω ±5%,1/10W	1	
R 23		CERMET RESISTOR RK73M2A150J	15Ω ±5%,1/10W	1	
R 24		CERMET RESISTOR RK73M2A472J	4.7kΩ ±5%,1/10W	1	
R 25		CERMET RESISTOR RK73M2A472J	4.7kΩ ±5%,1/10W	1	
R 26		METAL FILM RESISTOR RN73G2A133D	13kΩ ±0.5%,1/10W	1	
R 27		METAL FILM RESISTOR RN73G2A9120	9.1kΩ ±0.5%,1/10W	1	
R 28		CERMET RESISTOR RK73M2A472J	4.7kΩ ±5%,1/10W	1	

* Selected at factory

DRAWING No. ●●W87144 4/6

No.D073-1988.11

ANRITSU CORP.

Parts List of: A1-A5 2MHZ STEP PLL AMP 13

Ref. No.	Part Code	Description	Rating	Qty	Note
C 1		CER CAP CC732CH1H102J		1	
C 2		CER CAP CC732CH1H102J		1	
C 3	2387-10262	CER CAP CK733F1H104Z (A5	0.1μF,50V +80/-20%	1	
C 4		CER CAP CC732CH1H102J		1	
C 5		CER CAP CC732CH1H102J		1	
C 6	2387-10262	CER CAP CK733F1H104Z (A5	0.1μF,50V +80/-20%	1	
C 7	2387-02958	CER CAP CC732CH1H070D (no b	7p F,50V ±0.5p F	1	
C 8		CER CAP CC732CH1H102J		1	
C 9		CER CAP CC732CH1H102J		1	
C 10	2387-10262	CER CAP CK733F1H104Z (A5	0.1μF,50V +80/-20%	1	
C 11		CER CAP CC732CH1H102J		1	
C 12		CER CAP CC732CH1H102J		1	
C 13	2387-10262	CER CAP CK733F1H104Z (A5	0.1μF,50V +80/-20%	1	
C 14		CER CAP CC732CH1H102J		1	
L 1		INDUCTOR NL322522-R15K	0.15μH±10%	1	
Q 2		IC μPC1651G		1	
Q 3		IC μPC1654A		1	
Q 5		IC MWA320		1	
Q 6		IC μPC1651G		1	

* Selected at factory

DRAWING No. ●●W871●● 1/6

No.D073-1988.11

ANRITSU CORP.

Parts List of: A1-A5 2MHZ STEP PLL AMP

Ref. No.	Part Code	Description	Rating	Qty	Note
R 1		CERMET RESISTOR	47Ω		
		RK73M2A470J	± 5%,1/10W	1	
R 2		CERMET RESISTOR	51Ω		
		RK73M2A510J	± 5%,1/10W	1	
R 3		CERMET RESISTOR	330Ω		
		RK73M2A331J	± 5%,1/10W	1	
R 4		CERMET RESISTOR	47Ω		
		RK73M2A470J	± 5%,1/10W	1	
R 5		CERMET RESISTOR	470Ω		
		RK73M2A471J	± 5%,1/10W	1	
R 6		CERMET RESISTOR	470Ω		
		RK73M2A471J	± 5%,1/10W	1	
R 7		CERMET RESISTOR	100Ω		
		RK73M2A100J	± 5%,1/10W	1	
R 8		CERMET RESISTOR	330Ω		
		RK73M2A331J	± 5%,1/10W	1	
R 9		CERMET RESISTOR	330Ω		
		RK73M2A331J	± 5%,1/10W	1	
R 10		CERMET RESISTOR	15Ω		
		RK73M2A150J	± 5%,1/10W	1	
R 11					
		RS1FS391JL		1	
R 12		CERMET RESISTOR	330Ω		
		RK73M2A331J	± 5%,1/10W	1	
R 13		CERMET RESISTOR	330Ω		
		RK73M2A331J	± 5%,1/10W	1	
R 14		CERMET RESISTOR	15Ω		
		RK73M2A150J	± 5%,1/10W	1	
R 15		CERMET RESISTOR	330Ω		
		RK73M2A331J	± 5%,1/10W	1	
R 16		CERMET RESISTOR	330Ω		
		RK73M2A331J	± 5%,1/10W	1	
R 17		CERMET RESISTOR	330Ω		
		RK73M2A331J	± 5%,1/10W	1	
R 18		CERMET RESISTOR	15Ω		
		RK73M2A150J	± 5%,1/10W	1	
Z 1		DOUBLER			
		DB-2(8PIN)		1	

Rev. No./Date

DESIGNED BY

CHECKED BY APPROVED BY

Dep.

* : Selected at factory

DRAWING No. 66W87165 2/2 1

No.0073-1988.11

ANRITSU CORP.

Parts List of: A1-A7 VCO-3 13

Ref. No.	Part Code	Description	Rating	Qty	Note
C 1		CER CAP			
		CC732CH1H102J		1	
C 2		CER CAP	6pF		
		CC732CH1H060D	±0.5pF,50V	1	
C 3	2387-10262	CER CAP			
		CK733F1H104Z		1	
C 4	2387-10248	CER CAP	0.01μF		
		CK73281H103K	± 10%, 50V	1	
C 5	2387-10262	CER CAP			
		CK733F1H104Z		1	
C 6	2387-10262	CER CAP			
		CK733F1H104Z		1	
C 7	2387-10262	CER CAP			
		CK733F1H104Z		1	
L 1		INDUCTOR	0.22μH± 10%		
		NL322522-R22K		1	
L 2		INDUCTOR	0.47μH± 10%		
		NL322522-R47K		1	
Q 1		DI.VARI-CAP			
		FCS2M		1	
Q 2		IC			
		MT-18		1	
Q 3		TR			
		2SC2223 (F13 OR F1		1	
Q 4		DIODE			
		1S2835 (A3)		1	
Q 5		TR			
		2SC2351 (R2 OR R3)		1	
Q 6		IC			
		74AS74F		1	
Q 7		IC			
		74AS74F		1	
Q 8		DI.VARI-CAP			
		FCS2M		1	
R 1		CERMET RESISTOR	22KΩ		
		RK73M2A223J	± 5%,1/10W	1	
R 2		CERMET RESISTOR	1.2KΩ		
		RK73M2A122J	± 5%,1/10W	1	

Rev. No./Date

DESIGNED BY N.Nakamura

CHECKED BY APPROVED BY K. Sakagawa K. Tada

Dep.

* Selected at factory

DRAWING No. 66W87167 1/2

No.0073-1988.11

ANRITSU CORP.

Parts List of: A1-A7 VCO-3

Ref. No.	Part Code	Description	Rating	Qty	Note
R 3		CERMET RESISTOR	10KΩ		
		RK73M2A103J	± 5%,1/10W	1	
R 4		CERMET RESISTOR	220Ω		
		RK73M2A221J	± 5%,1/10W	1	
R 5		CERMET RESISTOR	2.2KΩ		
		RK73M2A222J	± 5%,1/10W	1	
R 6		CERMET RESISTOR	330Ω		
		RK73M2A331J	± 5%,1/10W	1	
R 7		CERMET RESISTOR	75Ω		
		RK73M2A750J	± 5%,1/10W	1	

Rev. No./Date

DESIGNED BY

CHECKED BY APPROVED BY

Dep.

* Selected at factory

DRAWING No. 66W87167 2/2

No.0073-1988.11

ANRITSU CORP.

Parts List of: A1-A8 AFC-3 13

Ref. No.	Part Code	Description	Rating	Qty	Note
C 1	2387-10248	CER CAP	0.01μF		
		CK73281H103K (A4	± 10%,50V	1	
C 2		CER CAP	0.1μF,50V		
		CK733F1H104Z (A5	+80/-20%	1	
C 3		PLSTC FILM CAP	0.47μF		
		ECQ-V1H474JW	± 5%,50V	1	
C 4		CER CAP	0.1μF,50V		
		CK733F1H104Z (A5	+80/-20%	1	
C 5	2387-10262	CER CAP	0.1μF,50V		
		CK733F1H104Z (A5	+80/-20%	1	
C 6		CER CAP	47p F		
		CC732CH1H470J (Sb	± 5%,50V	1	
C 7	2387-10248	CER CAP	0.01μF		
		CK73281H103K (A4	± 10%,50V	1	
C 8	2387-10248	CER CAP	0.01μF		
		CK73281H103K (A4	± 10%,50V	1	
C 9	2387-02979	CER CAP	220p F		
		CC732CH1H221J (Jb	± 5%,50V	1	
C 10	2387-02979	CER CAP	220p F		
		CC732CH1H221J (Jb	± 5%,50V	1	
C 11		NOT ASSIGNED			
C 12	2387-10248	CER CAP	0.01μF		
		CK73281H103K (A4	± 10%,50V	1	
C 13	2387-10262	CER CAP	0.1μF,50V		
		CK733F1H104Z (A5	+80/-20%	1	
C 14	2387-10262	CER CAP	0.1μF,50V		
		CK733F1H104Z (A5	+80/-20%	1	
C 15	2387-10267	CER CAP	0.22μF		
		CK73781H224K (IJ	± 10%,50V	1	
C 16	2387-10267	CER CAP	0.22μF		
		CK73781H224K (IJ	± 10%,50V	1	
C 17	2387-10262	CER CAP	0.1μF,50V		
		CK733F1H104Z (A5	+80/-20%	1	
C 18	2387-10262	CER CAP	0.1μF,50V		
		CK733F1H104Z (A5	+80/-20%	1	
C 19		CER CAP	2200p F		
		CK73281H222K (J3	± 10%,50V	1	
C 20		CER CAP	2200p F		
		CK73281H222K (J3	± 10%,50V	1	
C 21		NOT ASSIGNED			
C 22	2387-10262	CER CAP	0.1μF,50V		
		CK733F1H104Z (A5	+80/-20%	1	
C 23		NOT ASSIGNED			

Rev. No./Date

DESIGNED BY M.Nakamura

CHECKED BY APPROVED BY K. Sakagawa K. Tada

Dep.

* Selected at factory

DRAWING No. 66W87168 1/4

No.0073-1988.11

ANRITSU CORP.

Parts List of: A1-A8 AFC-3

Ref. No.	Part Code	Description	Rating	Qty	Note
C 24	2387-10262	CER CAP CK733F1H104Z (A 6	0.1μ F.50V +80/-20%	1	
C 25		CER CAP CK73381H104K		1	
J 1		NOT ASSIGNED			
J 2		NOT ASSIGNED			
J 3		NOT ASSIGNED			
J 4		NOT ASSIGNED			
J 5		NOT ASSIGNED			
J 6		NOT ASSIGNED			
J 7		PLUG DF1-8P-2.5DS	8P	1	
L 1		NOT ASSIGNED			
L 2		INDUCTOR NL453232-102K	1.0mH,± 10%	1	
Q 1		NOT ASSIGNED			
Q 2		IC 74ALS74F		1	
Q 3		IC 74121		1	
Q 4		TR,TWIN μ PA39A		1	
Q 5		TR 2SC1623 (L5 OR L6)		1	
Q 6		IC OP07CP		1	
Q 7		IC LM833M		1	
Q 8		NOT ASSIGNED			

Dep.

* Selected at factory

DRAWING No. 44W87148 2/4

No.D073-1988.11

ANRITSU CORP.

Parts List of: A1-A8 AFC-3

Ref. No.	Part Code	Description	Rating	Qty	Note
D 9		ダイオード 1SZ52		1	
R 1		METAL FILM RESISTOR RN73G2AS62D	5.6kΩ ± 0.5%,1/10W	1	
R 2		CERMET RESISTOR RK73M2A102J	1kΩ ± 5%,1/10W	1	
R 3		CERMET RESISTOR RK73M2A102J	1kΩ ± 5%,1/10W	1	
R 4		CERMET RESISTOR RK73M2A103J	10kΩ ± 5%,1/10W	1	
R 5		CERMET RESISTOR RK73M2A103J	10kΩ ± 5%,1/10W	1	
R 6		CERMET RESISTOR RK73M2A103J	10kΩ ± 5%,1/10W	1	
R 7		CERMET RESISTOR RK73M2A103J	10kΩ ± 5%,1/10W	1	
R 8		NOT ASSIGNED			
R 9		METAL FILM RESISTOR RN73G2A202D	2kΩ ± 0.5%,1/10W	1	
R 10		NOT ASSIGNED			
R 11		METAL FILM RESISTOR RN73G2A202D	2kΩ ± 0.5%,1/10W	1	
R 12		METAL FILM RESISTOR RN73G2AS11D	510Ω ± 0.5%,1/10W	1	
R 13		CERMET RESISTOR RK73M2A103J	10kΩ ± 5%,1/10W	1	
R 14		CERMET RESISTOR RK73M2A821J	820Ω ± 5%,1/10W	1	
R 15		VARIABLE RESISTOR RG0481D2H	1kΩ 1/4W	1	*
R 16		METAL FILM RESISTOR RN73G2A392D	3.9kΩ ± 0.5%,1/10W	1	
R 17		METAL FILM RESISTOR RN73G2A471D	470Ω ± 0.5%,1/10W	1	
R 18		CERMET RESISTOR RK73M2A102J	1kΩ ± 5%,1/10W	1	
R 19		CERMET RESISTOR RK73M2A102J	1kΩ ± 5%,1/10W	1	
R 20		CERMET RESISTOR RK73M2A102J	1kΩ ± 5%,1/10W	1	

Dep.

* Selected at factory

DRAWING No. 44W87148 3/4

No.D073-1988.11

ANRITSU CORP.

Parts List of: A1-A8 AFC-3

Ref. No.	Part Code	Description	Rating	Qty	Note
R 21		CERMET RESISTOR RK73M2A223J	22kΩ ± 5%,1/10W	1	
R 22		METAL FILM RESISTOR RN73G2A392D	3.9kΩ ± 0.5%,1/10W	1	
R 23		VARIABLE RESISTOR RG0485D1H	500Ω 1/4W	1	*
R 24		METAL FILM RESISTOR RN73G2A202D	2kΩ ± 0.5%,1/10W	1	
R 25		CERMET RESISTOR RK73M2A821J	820Ω ± 5%,1/10W	1	
R 26		VARIABLE RESISTOR RG0482D3H	20kΩ 1/4W	1	*
R 27		CERMET RESISTOR RK73M2AS61J	560Ω ± 5%,1/10W	1	
R 28		CERMET RESISTOR RK73M2A392J	3.9kΩ ± 5%,1/10W	1	
R 29		CERMET RESISTOR RK73M2A272J	2.7kΩ ± 5%,1/10W	1	
R 30		VARIABLE RESISTOR RG0482D2H	2kΩ 1/4W	1	*

Dep.

* Selected at factory

DRAWING No. 44W87148 4/4

No.D073-1988.11

ANRITSU CORP.

Parts List of: ME4510B 13
DMSA RX
A1-A9 CONTROLLER

Ref. No.	Part Code	Description	Rating	Qty	Note
C 1		CER CAP CK733F1H104Z	0.1μ F.50V +80/-20%	1	
C 2		CER CAP CK733F1H104Z	0.1μ F.50V +80/-20%	1	
C 3		CER CAP CK733F1H104Z	0.1μ F.50V +80/-20%	1	
C 4		CER CAP CK733F1H104Z	0.1μ F.50V +80/-20%	1	
C 5		CER CAP CK733F1H104Z	0.1μ F.50V +80/-20%	1	
C 6		NOT ASSIGN			
C 7		CER CAP CK733F1H104Z	0.1μ F.50V +80/-20%	1	
C 8		CER CAP CK733F1H104Z	0.1μ F.50V +80/-20%	1	
C 9		CER CAP CK733F1H104Z	0.1μ F.50V +80/-20%	1	
C 10		AL ELECTLT CAP CE04C1V330A	33μ F ± 20%.35V	1	
C 11		AL ELECTLT CAP CE04C1A221A	220μ F ± 20%.10V	1	
C 12		CER CAP CK733F1H104Z	0.1μ F.50V +80/-20%	1	
C 13		CER CAP CK733F1H104Z	0.1μ F.50V +80/-20%	1	
C 14		CER CAP CK733F1H104Z	0.1μ F.50V +80/-20%	1	
C 15		AL ELECTLT CAP CE04C1A101A	100μ F ± 20%.10V	1	
C 16		AL ELECTLT CAP CE04C1A101A	100μ F ± 20%.10V	1	
C 17		CER CAP CK733F1H104Z	0.1μ F.50V +80/-20%	1	
C 18		CER CAP CC732CH1H102J	1000p F ± 5%.50V	1	
C 19		CER CAP CC732CH1H102J	1000p F ± 5%.50V	1	
C 20		NOT ASSIGN			
C 21		CER CAP CC732CH1H221J	220p F ± 5%.50V	1	
C 22		CER CAP CC732CH1H221J	220p F ± 5%.50V	1	
C 23		CER CAP CK733F1H104Z	0.1μ F.50V +80/-20%	1	

Dep.

DRAWING No. 44W87149 -05 1/15

ANRITSU CORP.

Ref. No.	Part Code	Description	Rating	Qty	Note
C 24		CER CAP	0.1μ F,50V		
		CK733F1H104Z	+80/-20%	1	
C 25		NOT ASSIGN			
C 26		AL ELECTLT CAP	33μ F		
		CE04C1V330A	± 20%,35V	1	
C 27		AL ELECTLT CAP	220μ F		
		CE04C1A221A	± 20%,10V	1	
C 28		NOT ASSIGN			
C 29		NOT ASSIGN			
C 30		CER CAP	0.1μ F,50V		
		CK733F1H104Z	+80/-20%	1	
C 31		CER CAP	0.1μ F,50V		
		CK733F1H104Z	+80/-20%	1	
C 32		CER CAP	0.1μ F,50V		
		CK733F1H104Z	+80/-20%	1	
C 33		CER CAP	0.1μ F,50V		
		CK733F1H104Z	+80/-20%	1	
C 34		CER CAP	0.1μ F,50V		
		CK733F1H104Z	+80/-20%	1	
C 35		CER CAP	0.1μ F,50V		
		CK733F1H104Z	+80/-20%	1	
C 36		CER CAP	0.022μ F		
		CK733B1H223K	± 20%,50V	1	
C 37		CER CAP	0.022μ F		
		CK733B1H223K	± 20%,50V	1	
C 38		CER CAP	4700p F		
		CK732B1H472K	± 10%,50V	1	
C 39		CER CAP	4700p F		
		CK732B1H472K	± 10%,50V	1	
C 40	2238-J0105	PLSTC FILM CAP	1μ F		
		ECQ-V1H105JW	± 5%,50V	1	
C 41		NOT ASSIGN			
C 42		CER CAP	0.1μ F,50V		
		CK733F1H104Z	+80/-20%	1	
C 43		CER CAP	0.1μ F,50V		
		CK733F1H104Z	+80/-20%	1	
C 44		CER CAP	0.1μ F,50V		
		CK733F1H104Z	+80/-20%	1	
C 45		CER CAP	0.1μ F,50V		
		CK733F1H104Z	+80/-20%	1	
C 46		CER CAP	0.1μ F,50V		
		CK733F1H104Z	+80/-20%	1	

※ Selected at factory

© TTZC 1993.07

ANRITSU CORP.

Ref. No.	Part Code	Description	Rating	Qty	Note
C 47		CER CAP	0.1μ F,50V		
		CK733F1H104Z	+80/-20%	1	
C 48		CER CAP	0.1μ F,50V		
		CK733F1H104Z	+80/-20%	1	
C 49		CER CAP	0.1μ F,50V		
		CK733F1H104Z	+80/-20%	1	
C 50		CER CAP	0.1μ F,50V		
		CK733F1H104Z	+80/-20%	1	
C 51		AL ELECTLT CAP	100μ F		
		CE04C1E101A	± 20%,25V	1	
C 52		AL ELECTLT CAP	100μ F		
		CE04C1E101A	± 20%,25V	1	
C 53		AL ELECTLT CAP	47μ F		
		CE04C1E470A	± 20%,25V	1	
C 54		AL ELECTLT CAP	47μ F		
		CE04C1E470A	± 20%,25V	1	
C 55		NOT ASSIGN			
C 56		CER CAP	0.1μ F,50V		
		CK733F1H104Z	+80/-20%	1	
C 57		CER CAP	0.1μ F,50V		
		CK733F1H104Z	+80/-20%	1	
C 58		CER CAP	0.1μ F,50V		
		CK733F1H104Z	+80/-20%	1	
C 59		CER CAP	0.1μ F,50V		
		CK733F1H104Z	+80/-20%	1	
C 60		CER CAP	0.1μ F,50V		
		CK733F1H104Z	+80/-20%	1	
C 61		CER CAP	0.1μ F,50V		
		CK733F1H104Z	+80/-20%	1	
C 62		CER CAP	0.1μ F,50V		
		CK733F1H104Z	+80/-20%	1	
C 63		CER CAP	0.1μ F,50V		
		CK733F1H104Z	+80/-20%	1	
C 64		CER CAP	0.1μ F,50V		
		CK733F1H104Z	+80/-20%	1	
C 65		CER CAP	0.1μ F,50V		
		CK733F1H104Z	+80/-20%	1	
C 66		CER CAP	0.1μ F,50V		
		CK733F1H104Z	+80/-20%	1	
C 67		CER CAP	0.1μ F,50V		
		CK733F1H104Z	+80/-20%	1	
C 68		AL ELECTLT CAP	33μ F		
		CE04C1V330A	± 20%,35V	1	
C 69		AL ELECTLT CAP	220μ F		
		CE04C1A221A	± 20%,10V	1	

※ Selected at factory

© TTZC 1993.07

ANRITSU CORP.

Ref. No.	Part Code	Description	Rating	Qty	Note
C 70		AL ELECTLT CAP	220μ F		
		CE04C1A221A	± 20%,10V	1	
C 71		NOT ASSIGN			
C 72		NOT ASSIGN			
C 73		NOT ASSIGN			
C 74		CER CAP	0.1μ F,50V		
		CK733F1H104Z	+80/-20%	1	
C 75		CER CAP	0.1μ F,50V		
		CK733F1H104Z	+80/-20%	1	
C 76		CER CAP	0.1μ F,50V		
		CK733F1H104Z	+80/-20%	1	
C 77		CER CAP	0.1μ F,50V		
		CK733F1H104Z	+80/-20%	1	
C 78		CER CAP	0.1μ F,50V		
		CK733F1H104Z	+80/-20%	1	
C 79		CER CAP	0.1μ F,50V		
		CK733F1H104Z	+80/-20%	1	
C 80		CER CAP	0.1μ F,50V		
		CK733F1H104Z	+80/-20%	1	
C 81		CER CAP	0.1μ F,50V		
		CK733F1H104Z	+80/-20%	1	
C 82		CER CAP	0.1μ F,50V		
		CK733F1H104Z	+80/-20%	1	
C 83		CER CAP	0.1μ F,50V		
		CK733F1H104Z	+80/-20%	1	
C 84		CER CAP	0.1μ F,50V		
		CK733F1H104Z	+80/-20%	1	
C 85		CER CAP	0.1μ F,50V		
		CK733F1H104Z	+80/-20%	1	
C 86		CER CAP	0.1μ F,50V		
		CK733F1H104Z	+80/-20%	1	
C 87		CER CAP	0.1μ F,50V		
		CK733F1H104Z	+80/-20%	1	
C 88		CER CAP	0.1μ F,50V		
		CK733F1H104Z	+80/-20%	1	
C 89		CER CAP	0.1μ F,50V		
		CK733F1H104Z	+80/-20%	1	
C 90		CER CAP	0.1μ F,50V		
		CK733F1H104Z	+80/-20%	1	
C 91	2193-Y0336	AL ELECTLT CAP	33μ F		
		CE04C1V330A	± 20%,35V	1	
C 92		AL ELECTLT CAP	100μ F		
		CE04C1A101A	± 20%,10V	1	

※ Selected at factory

© TTZC 1993.07

ANRITSU CORP.

Ref. No.	Part Code	Description	Rating	Qty	Note
C 93		CER CAP	0.1μ F,50V		
		CK733F1H104Z	+80/-20%	1	
C 94		CER CAP	0.1μ F,50V		
		CK733F1H104Z	+80/-20%	1	
C 95		NOT ASSIGN			
C 96		CER CAP	0.1μ F,50V		
		CK733F1H104Z	+80/-20%	1	
C 97		CER CAP	0.1μ F,50V		
		CK733F1H104Z	+80/-20%	1	
C 98		CER CAP	0.1μ F,50V		
		CK733F1H104Z	+80/-20%	1	
C 99		CER CAP	0.1μ F,50V		
		CK733F1H104Z	+80/-20%	1	
C 100		CER CAP	0.1μ F,50V		
		CK733F1H104Z	+80/-20%	1	
C 101		CER CAP	0.1μ F,50V		
		CK733F1H104Z	+80/-20%	1	
C 102		CER CAP	0.1μ F,50V		
		CK733F1H104Z	+80/-20%	1	
C 103		NOT ASSIGN			
C 104		NOT ASSIGN			
C 105		NOT ASSIGN			
C 106		NOT ASSIGN			
C 107		CER CAP	0.1μ F,50V		
		CK733F1H104Z	+80/-20%	1	
C 108		CER CAP	0.1μ F,50V		
		CK733F1H104Z	+80/-20%	1	
C 109		CER CAP	0.1μ F,50V		
		CK733F1H104Z	+80/-20%	1	
C 110		CER CAP	0.1μ F,50V		
		CK733F1H104Z	+80/-20%	1	
C 111		NOT ASSIGN			
C 112		CER CAP	0.1μ F,50V		
		CK733F1H104Z	+80/-20%	1	
C 113	2194-Y0106	AL ELECTLT CAP	10μ F		
		CE04C1H100A	± 20%,50V	1	
C 114		AL ELECTLT CAP	100μ F		
		CE04C1E101A	± 20%,25V	1	
C 115		NOT ASSIGN			

※ Selected at factory

© TTZC 1993.07

ANRITSU CORP.

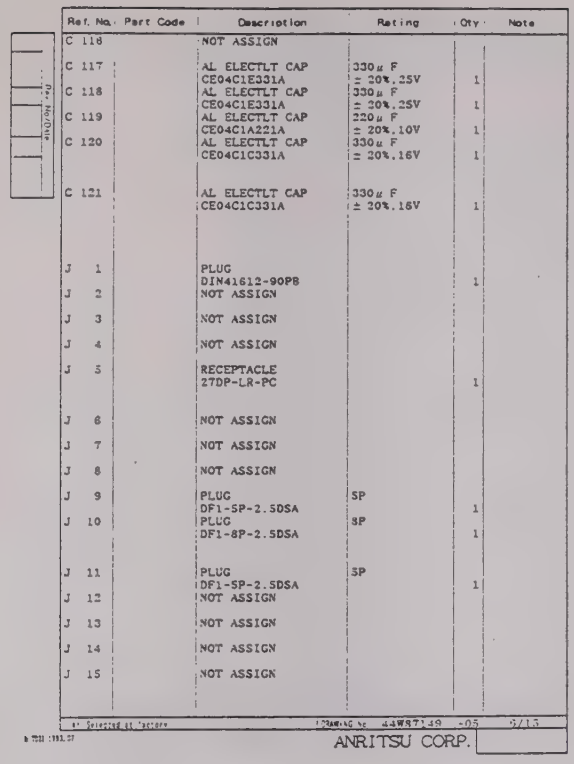

Ref. No.	Part Code	Description	Rating	Qty	Note
C 118		NOT ASSIGN			
C 117		AL ELECTLT CAP	330μ F		
		CE04C1E331A	± 20%,25V	1	
C 118		AL ELECTLT CAP	330μ F		
		CE04C1E331A	± 20%,25V	1	
C 119		AL ELECTLT CAP	220μ F		
		CE04C1A221A	± 20%,10V	1	
C 120		AL ELECTLT CAP	330μ F		
		CE04C1C331A	± 20%,16V	1	
C 121		AL ELECTLT CAP	330μ F		
		CE04C1C331A	± 20%,16V	1	
J 1		PLUG			
		DIN41612-90PB		1	
J 2		NOT ASSIGN			
J 3		NOT ASSIGN			
J 4		NOT ASSIGN			
J 5		RECEPTACLE			
		Z7DP-LR-PC		1	
J 6		NOT ASSIGN			
J 7		NOT ASSIGN			
J 8		NOT ASSIGN			
J 9		PLUG	5P		
		DF1-5P-2.5DSA		1	
J 10		PLUG	8P		
		DF1-8P-2.5DSA		1	
J 11		PLUG	5P		
		DF1-5P-2.5DSA		1	
J 12		NOT ASSIGN			
J 13		NOT ASSIGN			
J 14		NOT ASSIGN			
J 15		NOT ASSIGN			

ANRITSU CORP.

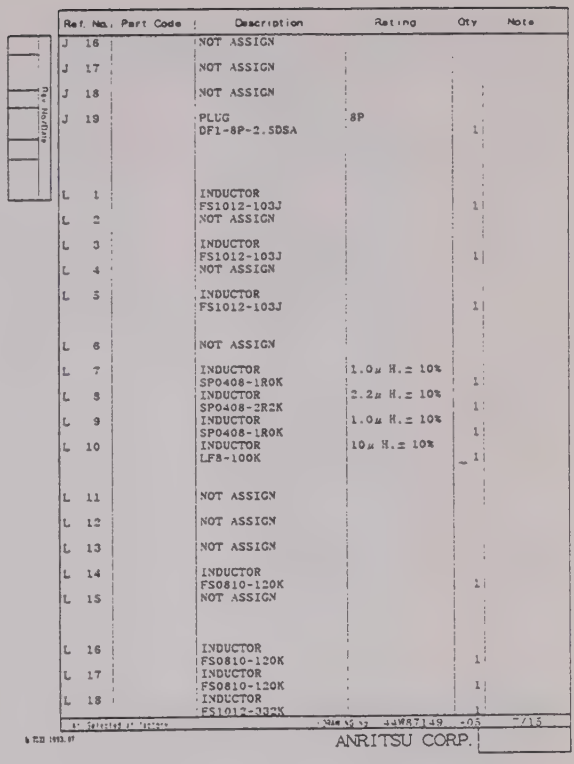

Ref. No.	Part Code	Description	Rating	Qty	Note
J 16		NOT ASSIGN			
J 17		NOT ASSIGN			
J 18		NOT ASSIGN			
J 19		PLUG	8P		
		DF1-8P-2.5DSA		1	
L 1		INDUCTOR			
		FS1012-103J		1	
L 2		NOT ASSIGN			
L 3		INDUCTOR			
		FS1012-103J		1	
L 4		NOT ASSIGN			
L 5		INDUCTOR			
		FS1012-103J		1	
L 6		NOT ASSIGN			
L 7		INDUCTOR	1.0μ H.± 10%		
		SP0408-1R0K		1	
L 8		INDUCTOR	2.2μ H.± 10%		
		SP0408-2R2K		1	
L 9		INDUCTOR	1.0μ H.± 10%		
		SP0408-1R0K		1	
L 10		INDUCTOR	10μ H.± 10%		
		LF8-100K		1	
L 11		NOT ASSIGN			
L 12		NOT ASSIGN			
L 13		NOT ASSIGN			
L 14		INDUCTOR			
		FS0810-120K		1	
L 15		NOT ASSIGN			
L 16		INDUCTOR			
		FS0810-120K		1	
L 17		INDUCTOR			
		FS0810-120K		1	
L 18		INDUCTOR			
		FS1012-332K		1	

ANRITSU CORP.

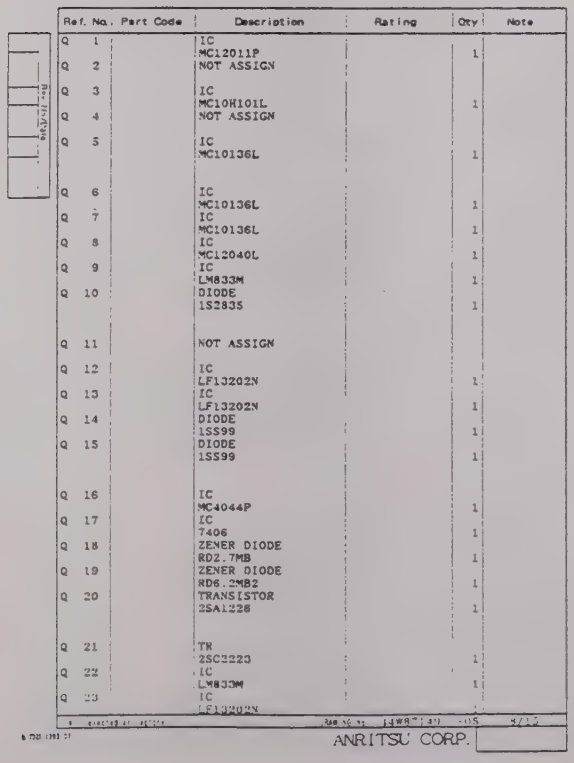

Ref. No.	Part Code	Description	Rating	Qty	Note
Q 1		IC			
		MC12011P		1	
Q 2		NOT ASSIGN			
Q 3		IC			
		MC10H101L		1	
Q 4		NOT ASSIGN			
Q 5		IC			
		MC10136L		1	
Q 6		IC			
		MC10136L		1	
Q 7		IC			
		MC10136L		1	
Q 8		IC			
		MC12040L		1	
Q 9		IC			
		LM833M		1	
Q 10		DIODE			
		1S2835		1	
Q 11		NOT ASSIGN			
Q 12		IC			
		LF13202N		1	
Q 13		IC			
		LF13202N		1	
Q 14		DIODE			
		1SS99		1	
Q 15		DIODE			
		1SS99		1	
Q 16		IC			
		MC4044P		1	
Q 17		IC			
		7406		1	
Q 18		ZENER DIODE			
		RD2.7MB		1	
Q 19		ZENER DIODE			
		RD6.2MB2		1	
Q 20		TRANSISTOR			
		2SA1226		1	
Q 21		TR			
		2SC2223		1	
Q 22		IC			
		LM833M		1	
Q 23		IC			
		LF13202N			

ANRITSU CORP.

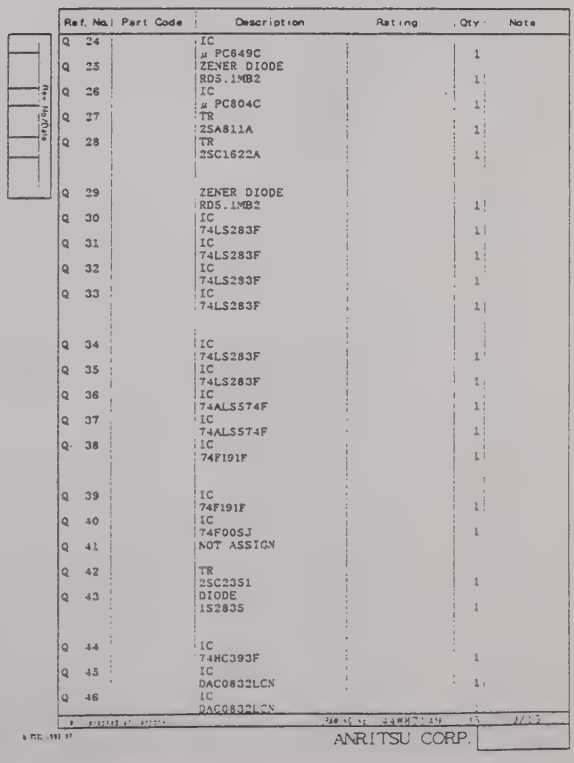

Ref. No.	Part Code	Description	Rating	Qty	Note
Q 24		IC			
		μ PC649C		1	
Q 25		ZENER DIODE			
		RD5.1MB2		1	
Q 26		IC			
		μ PC804C		1	
Q 27		TR			
		2SA811A		1	
Q 28		TR			
		2SC1622A		1	
Q 29		ZENER DIODE			
		RD5.1MB2		1	
Q 30		IC			
		74LS283F		1	
Q 31		IC			
		74LS283F		1	
Q 32		IC			
		74LS283F		1	
Q 33		IC			
		74LS283F		1	
Q 34		IC			
		74LS283F		1	
Q 35		IC			
		74LS283F		1	
Q 36		IC			
		74ALS574F		1	
Q 37		IC			
		74ALS574F		1	
Q 38		IC			
		74F191F		1	
Q 39		IC			
		74F191F		1	
Q 40		IC			
		74F00SJ		1	
Q 41		NOT ASSIGN			
Q 42		TR			
		2SC2351		1	
Q 43		DIODE			
		1S2835		1	
Q 44		IC			
		74HC393F		1	
Q 45		IC			
		DAC0832LCN		1	
Q 46		IC			
		DAC0832LCN			

ANRITSU CORP.

Ref. No.	Part Code	Description	Rating	Qty	Note
Q 47		IC			
		μ PC78L12		1	
Q 48		NOT ASSIGN			
Q 49		IC			
		DAC0832LCN		1	
Q 50		IC			
		DAC0832LCN		1	
Q 51		IC			
		LT1013DS8		1	
Q 52		IC			
		LT1001CS8		1	
Q 53		IC			
		LT1013DS8		1	
Q 54		IC			
		LT1001CS8		1	
Q 55		IC			
		NJM79L09A		1	
Q 56		IC			
		74HCS74F		1	
Q 57		IC			
		74HCS74F		1	
Q 58		IC			
		74HC174F		1	
Q 59		IC			
		74HCS74F		1	
Q 60		IC			
		74HC174F		1	
Q 61		IC			
		74ALS138F.		1	
Q 62		IC			
		74LS283F		1	
Q 63		NOT ASSIGN			
Q 64		NOT ASSIGN			
Q 65		NOT ASSIGN			
Q 66		NOT ASSIGN			
Q 67		TR			
		2SD1593		1	
Q 68		IC			
		NJM7805FA		1	
Q 69		IC			
		NJM7805FA		1	

* : Selected at Assembly

DRAWING No. 44WR7149 -05 10/13

ANRITSU CORP.

Ref. No.	Part Code	Description	Rating	Qty	Note
R 1		CERMET RESISTOR	4.7k Ω		
		RK73M2A472J	± 5%.1/10W	1	
R 2		CERMET RESISTOR	4.7k Ω		
		RK73M2A472J	± 5%.1/10W	1	
R 3		CERMET RESISTOR	100Ω		
		RK73M2A101J	± 5%.1/10W	1	
R 4		VARIABLE RESISTOR	1k Ω		
		RG04B102H	1/4W	1	*
R 5		METAL FILM RESISTOR	3.3k Ω		
		RN73G2A332D	± 0.5%.1/10W	1	
R 6		METAL FILM RESISTOR	2k Ω		
		RN73G2A202D	± 0.5%.1/10W	1	
R 7		NOT ASSIGN			
R 8		NOT ASSIGN			
R 9		NOT ASSIGN			
R 10		NOT ASSIGN			
R 11		CERMET RESISTOR	1k Ω		
		RK73M2A102J	± 5%.1/10W	1	
R 12		CERMET RESISTOR	1.5k Ω		
		RK73M2A152J	± 5%.1/10W	1	
R 13		CERMET RESISTOR	47Ω		
		RK73M2A470J	± 5%.1/10W	1	
R 14		RES ARRAY	470Ω		
		RRS-4-471JA	± 5%	1	
R 15		RES ARRAY	470Ω		
		RRS-6-471JA	± 5%	1	
R 16		RES ARRAY	3.3k Ω		
		RRS-4-332JA	± 5%	1	
R 17		RES ARRAY	3.3k Ω		
		RRS-4-332JA	± 5%	1	
R 18		RES ARRAY	3.3k Ω		
		RRS-4-332JA	± 5%	1	
R 19		CERMET RESISTOR	3.9k Ω		
		RK73M2A392J	± 5%.1/10W	1	
R 20		CERMET RESISTOR	3.9k Ω		
		RK73M2A392J	± 5%.1/10W	1	
R 21		CERMET RESISTOR	3.9k Ω		
		RK73M2A392J	± 5%.1/10W	1	
R 22		CERMET RESISTOR	3.9k Ω		
		RK73M2A392J	± 5%.1/10W	1	
R 23		CERMET RESISTOR	3.9k Ω		
		RK73M2A392J	± 5%.1/10W	1	

* : Selected at Assembly

DRAWING No. 44WR7149 -05 11/15

ANRITSU CORP.

Ref. No.	Part Code	Description	Rating	Qty	Note
R 24		CERMET RESISTOR	3.9k Ω		
		RK73M2A392J	± 5%.1/10W	1	
R 25		CERMET RESISTOR	3.9k Ω		
		RK73M2A392J	± 5%.1/10W	1	
R 26		CERMET RESISTOR	3.9k Ω		
		RK73M2A392J	± 5%.1/10W	1	
R 27		CERMET RESISTOR	3.9k Ω		
		RK73M2A392J	± 5%.1/10W	1	
R 28		NOT ASSIGN			
R 29		NOT ASSIGN			
R 30		NOT ASSIGN			
R 31		METAL FILM RESISTOR	470Ω		
		RN73G2A471D	± 0.5%.1/10W	1	
R 32		METAL FILM RESISTOR	1.5k Ω		
		RN73G2A152D	± 0.5%.1/10W	1	
R 33		METAL FILM RESISTOR	2k Ω		
		RN73G2A202D	± 0.5%.1/10W	1	
R 34		METAL FILM RESISTOR	150Ω		
		RN73G2A151D	± 0.5%.1/10W	1	
R 35		METAL FILM RESISTOR	150Ω		
		RN73G2A151D	± 0.5%.1/10W	1	
R 36		METAL FILM RESISTOR	510Ω		
		RN73G2A511D	± 0.5%.1/10W	1	
R 37		METAL FILM RESISTOR	510Ω		
		RN73G2A511D	± 0.5%.1/10W	1	
R 38		METAL FILM RESISTOR	1k Ω		
		RN73G2A102D	± 0.5%.1/10W	1	
R 39		METAL FILM RESISTOR	1k Ω		
		RN73G2A102D	± 0.5%.1/10W	1	
R 40		METAL FILM RESISTOR	10k Ω		
		RN73G2A103D	± 0.5%.1/10W	1	
R 41		METAL FILM RESISTOR	10k Ω		
		RN73G2A103D	± 0.5%.1/10W	1	
R 42		METAL FILM RESISTOR	2k Ω		
		RN73G2A202D	± 0.5%.1/10W	1	
R 43		METAL FILM RESISTOR	2k Ω		
		RN73G2A202D	± 0.5%.1/10W	1	
R 44		METAL FILM RESISTOR	82k Ω		
		RN73G2A823D	± 0.5%.1/10W	1	
R 45		METAL FILM RESISTOR	82k Ω		
		RN73G2A823D	± 0.5%.1/10W	1	
R 46		CERMET RESISTOR	470Ω		
		RK73M2A471J	± 5%.1/10W	1	

* : Selected at Assembly

DRAWING No. 44WR7149 -05 12/17

ANRITSU CORP.

Ref. No.	Part Code	Description	Rating	Qty	Note
R 47		CERMET RESISTOR	82k Ω		
		RK73M2A823J	± 5%.1/10W	1	
R 48		NOT ASSIGN			
R 49		NOT ASSIGN			
R 50		NOT ASSIGN			
R 51		RES ARRAY	1k Ω		
		RRS-6-102JA	± 5%	1	
R 52		CERMET RESISTOR	1.8k Ω		
		RK73M2A182J	± 5%.1/10W	1	
R 53		CERMET RESISTOR	8.2k Ω		
		RK73M2A822J	± 5%.1/10W	1	
R 54		METAL FILM RESISTOR	470Ω		
		RN73G2A471D	± 0.5%.1/10W	1	
R 55		METAL FILM RESISTOR	1k Ω		
		RN73G2A102D	± 0.5%.1/10W	1	
R 56		VARIABLE RESISTOR	1k Ω		
		RG04B102H	1/4W	1	*
R 57		METAL FILM RESISTOR	2.2k Ω		
		RN73G2A222D	± 0.5%.1/10W	1	
R 58		METAL FILM RESISTOR	10k Ω		
		RN73G2A103D	± 0.5%.1/10W	1	
R 59		METAL FILM RESISTOR	10k Ω		
		RN73G2A103D	± 0.5%.1/10W	1	
R 60		METAL FILM RESISTOR	4.7k Ω		
		RN73G2A472D	± 0.5%.1/10W	1	
R 61		METAL FILM RESISTOR	4.7k Ω		
		RN73G2A472D	± 0.5%.1/10W	1	
R 62		NOT ASSIGN			
R 63		NOT ASSIGN			
R 64		NOT ASSIGN			
R 65		NOT ASSIGN			
R 66		METAL FILM RESISTOR	1k Ω		
		RN73G2A102D	± 0.5%.1/10W	1	
R 67		METAL FILM RESISTOR	1k Ω		
		RN73G2A102D	± 0.5%.1/10W	1	
R 68		VARIABLE RESISTOR	10k Ω		
		RG04B103H	1/4W	1	*
R 69		CERMET RESISTOR	10k Ω		
		RK73M2A103J	± 5%.1/10W	1	

* : Selected at Assembly

DRAWING No. 44WR7149 -05 13/17

ANRITSU CORP.

Ref. No.	Part Code	Description	Rating	Qty	Note
R 70		METAL FILM RESISTOR	1k Ω		
		RN73G2A102D	± 0.5%,1/10W	1	
R 71		CERMET RESISTOR	10k Ω		
		RK73M2A103J	± 5%,1/10W	1	
R 72		METAL FILM RESISTOR	4.7k Ω		
		RN73G2A472D	± 0.5%,1/10W	1	
R 73		METAL FILM RESISTOR	10k Ω		
		RN73G2A103D	± 0.5%,1/10W	1	
R 74		METAL FILM RESISTOR	10k Ω		
		RN73G2A103D	± 0.5%,1/10W	1	
R 75		METAL FILM RESISTOR	100Ω		
		RN73G2A101D	± 0.5%,1/10W	1	
R 76		METAL FILM RESISTOR	100Ω		
		RN73G2A101D	± 0.5%,1/10W	1	
R 77		SIP.TPE			
		RRS-6-103JB		1	
R 78		CERMET RESISTOR	47k Ω		
		RK73M2A473J	± 5%,1/10W	1	
R 79		CERMET RESISTOR	2.7k Ω		
		RK73M2A272J	± 5%,1/10W	1	
R 80		NOT ASSIGN			
R 81		METAL FILM RESISTOR	68Ω		
		RN73G2A680D	± 0.5%,1/10W	1	
R 82		METAL FILM RESISTOR	300Ω		
		RN73G2A301D	± 0.5%,1/10W	1	
R 83		METAL FILM RESISTOR	3k Ω		
		RN73G2A302D	± 0.5%,1/10W	1	
R 84		METAL FILM RESISTOR	270Ω		
		RN73G2A271D	± 0.5%,1/10W	1	
R 85		NOT ASSIGN			
R 86		METAL FILM RESISTOR	910Ω		
		RN73G2A911D	± 0.5%,1/10W	1	
R 87		METAL FILM RESISTOR	1.3k Ω		
		RN73G2A132D	± 0.5%,1/10W	1	
R 88		VARIABLE RESISTOR	100Ω		
		RG04B101H	1/4W	1	•
R 89		METAL FILM RESISTOR	1k Ω		
		RN73G2A102D	± 0.5%,1/10W	1	
R 90	4242-D2003	METAL FILM RESISTOR	200k Ω		
		RN14K2E2003D	± 0.5%,1/4W	1	
R 91		METAL FILM RESISTOR	47k Ω		
		RN73G2A473D	± 0.5%,1/10W	1	
R 92		METAL FILM RESISTOR	4.7k Ω		
		RN73G2A472D	± 0.5%,1/10W	1	

• Selected at factory

DRAWING No 44W87149 -05 14/15

& TEL 1993.07

ANRITSU CORP.

Parts List of: A2 RF INPUT & IF OVERALL 14

Ref. No.	Part Code	Description	Rating	Qty	Note
R 93		METAL FILM RESISTOR	91Ω		
		RN73G2A910D	± 0.5%,1/10W	1	
R 94		METAL FILM RESISTOR	68Ω		
		RN73G2A680D	± 0.5%,1/10W	1	
R 95		METAL FILM RESISTOR	3k Ω		
		RN73G2A302D	± 0.5%,1/10W	1	
R 96		METAL FILM RESISTOR	910Ω		
		RN73G2A911D	± 0.5%,1/10W	1	
R 97		METAL FILM RESISTOR	1.5k Ω		
		RN73G2A152D	± 0.5%,1/10W	1	
R 98		VARIABLE RESISTOR	100Ω		
		RG04B101H	1/4W	1	•
R 99		METAL FILM RESISTOR	1k Ω		
		RN73G2A102D	± 0.5%,1/10W	1	
R 100	4242-D2003	METAL FILM RESISTOR	200k Ω		
		RN14K2E2003D	± 0.5%,1/4W	1	
R 101		METAL FILM RESISTOR	47k Ω		
		RN73G2A473D	± 0.5%,1/10W	1	
R 102		METAL FILM RESISTOR	2.4k Ω		
		RN73G2A242D	± 0.5%,1/10W	1	
R 103		NOT ASSIGN			
R 104		CERMET RESISTOR	1k Ω		
		RK73M2A102J	± 5%,1/10W	1	
R 105		NOT ASSIGN			
R 106		CERMET RESISTOR	4.7k Ω		
		RK73M2A472J	± 5%,1/10W	1	
R 107		CERMET RESISTOR	330Ω		
		RK73M2A331J	± 5%,1/10W	1	
R 108		CERMET RESISTOR	330Ω		
		RK73M2A331J	± 5%,1/10W	1	
X 1		XTAL OSC			
		NSA0117B		1	

• Selected at factory

DRAWING No 44W87149 -05 15/15

& TEL 1993.07

ANRITSU CORP.

Parts List of: A2 RF INPUT & IF OVERALL

Ref. No.	Part Code	Description	Rating	Qty	Note
A 1		A2-A1 MAIN CONVERTE			
		PC BOARD 422U1358O		1	44W87150
A 2		A2-A2 AUX CONVERTER			
		PC BOARD 422U1358O		1	44W87151
A 3		NOT ASSIGNED			
A 4		A2-A4 LST LOCAL AMP			
		PC BOARD 422U1358OP		1	44W87153
A 5		A2-A5 BPF			
		PC BOARD 422U1358O		1	44W87154
A 6		A2-A6 IF AMP			
		PC BOARD 422U1358O		1	44W87155
A 7		A2-A7 2ND LOCAL			
		PC BOARD 422U1358O		1	44W87156
A 8		A2-A8 3RD CONVERTER			
		PC BOARD 422U13582		1	44W87157
C 1		CER			
		DFT3D1-8D1X7R1D2S5D		1	
C 2		CER			
		DFT3D1-8D1X7R1D2S5D		1	
C 3		CER			
		DFT3D1-8D1X7R1D2S5D		1	
C 4		CER			
		DFT3D1-8D1X7R1D2S5D		1	
C 5		CER			
		DFT3D1-8D1X7R1D2S5D		1	
C 6		NOT ASSIGNED			
C 7		CER			
		DFT3D1-8D1X7R1D2S5D		1	
C 8		CER			
		DFT3D1-8D1X7R1D2S5D		1	
C 9		CER			
		DFT3D1-8D1X7R1D2S5D		1	
C 10		CER			
		DFT3D1-8D1X7R1D2S5D		1	
C		CER			
		DFT3D1-8D1X7R1D2S5D		1	
C 12		CER			
		DFT3D1-8D1X7R1D2S5D		1	
C 13		CER			
		DFT3D1-8D1X7R1D2S5D		1	
C 14		CER			
		DFT3D1-8D1X7R1D2S5D		1	

DESIGNED BY

CHECKED BY

APPROVED BY

Dep.

• Selected at factory

DRAWING No 44W87[illegible]

No 0073-1988 1

ANRITSU CORP.

Ref. No.	Part Code	Description	Rating	Qty	Note
C 15		CER			
		DFT3D1-8D1X7R1D2S5D		1	
C 16		CER			
		DFT3D1-8D1X7R1D2S5D		1	
C 17		NOT ASSIGNED			
C 18		NOT ASSIGNED			
C 19		CER			
		DFT3D1-8D1X7R1D2S5D		1	
C 20		CER			
		DFT3D1-8D1X7R1D2S5D		1	
J 1		NOT ASSIGNED			
J 2		RECEPTACLE			
		HRM-17D-1SS		1	
J 3		RECEPTACLE			
		KC-LR0D5		1	
J 4		RECEPTACLE			
		KC-LR0D5		1	
J 5		NOT ASSIGNED			
J 6		NOT ASSIGNED			
J 7		NOT ASSIGNED			
J 8		NOT ASSIGNED			
J 9		NOT ASSIGNED			
J 10		NOT ASSIGNED			
J		PLUG	2P		
		(DF1-5P-2.5DSA)		1	
J		PLUG	3P		
		(DF1-3P-2.5DSA)			
J		PLUG	2P		
		(DF1-2P-2.5DSA)		1	
J		PLUG	2P		
		(DF1-2P-2.5DSA)		1	
J		PLUG	10P		
		(DF1-10P-2.5DSA)			

DESIGNED BY

CHECKED BY

APPROVED BY

Dep.

• Selected at factory

DRAWING No 44W80-42 2/3

No 0073-1988 11

ANRITSU CORP.

Parts List of: A2 RF INPUT & IF OVERALL

Ref. No.	Part Code	Description	Rating	Qty	Note
J 16		PLUG (DF1-8P-2.5DSA)	8P	1	
J 17		PLUG (DF1-2P-2.5DSA)	2P	1	
J 18		NOT ASSIGNED			
J 19		CABLE DF1-5S-2.5R28-10B		1	
J 20		CABLE DF1-10S-2.5R28-10B		1	
J 21		CABLE DF1-8S-2.5R28-20A		1	
J 22		CABLE DF1-3S-2.5R28-10B		1	
J 23		CABLE DF1-2S-2.5R28-20A		1	
J 24		CABLE DF1-2S-2.5R28-10A		1	
J 25		NOT ASSIGNED			
J 26		NOT ASSIGNED			
J 27		CABLE DF1-5S-2.5R28-10B		1	
J 28		PLUG (DF1-5P-2.5DSA)	5P	1	
J 29		CABLE DF1-3S-2.5R28-10B		1	
J 30		PLUG (DF1-3P-2.5DSA)	3P	1	

Rev. No./Date | DESIGNED BY | CHECKED BY | APPROVED BY | Dep.

* : Selected at factory

DRAWING No. 46886762 3/5

No.0073-1988.11

ANRITSU CORP.

Parts List of: ME4510B 15
DMSA RX
A2-A1 MAIN CONV

Ref. No.	Part Code	Description	Rating	Qty	Note
C 1		CER CAP	5p F.50V		
		CC732CH1H050D	± 0.5p F	1	
C 2		CER CAP	0.5p F.50V		
		CC732CK1H0R5C	± 0.25p F	1	
C 3		CER CAP	8p F.50V		
		CC732CH1H080D	± 0.5p F	1	
C 4		CER CAP	0.5p F.50V		
		CC732CK1H0R5C	± 0.25p F	1	
C 5		CER CAP	6p F.50V		
		CC732CH1H060D	± 0.5p F	1	
C 6		CER CAP	0.1μ F.50V		
		CK733F1H104Z	+80/-20%	1	
C 7		CER CAP	0.1μ F.50V		
		CK733F1H104Z	+80/-20%	1	
C 8		CER CAP	0.1μ F.50V		
		CK733F1H104Z	+80/-20%	1	
C 9		CER CAP	0.1μ F.50V		
		CK733F1H104Z	+80/-20%	1	
C 10		CER CAP	15p F		
		CC732CH1H150J	± 5%.50V	1	
C 11		CER CAP	0.1μ F.50V		
		CK733F1H104Z	+80/-20%	1	
C 12		CER CAP	0.1μ F.50V		
		CK733F1H104Z	+80/-20%	1	
C 13		CER CAP	0.1μ F.50V		
		CK733F1H104Z	+80/-20%	1	
C 14		CER CAP	4700p F		
		CK732B1H472K	± 10%.50V	1	
C 15		CER CAP	0.1μ F.50V		
		CK733F1H104Z	+80/-20%	1	
C 16		CER CAP	0.1μ F.50V		
		CK733F1H104Z	+80/-20%	1	
C 17		CER CAP	0.1μ F.50V		
		CK733F1H104Z	+80/-20%	1	
C 18		CER CAP	0.1μ F.50V		
		CK733F1H104Z	+80/-20%	1	
C 19		CER CAP	15p F		
		CC732CH1H150J	± 5%.50V	1	*OPEN
C 20		CPA2		1	
C 21		CER CAP	8p F.50V		
		CC732CH1H080D	± 0.5p F	1	
C 22		CPA10		1	
C 23		CPA2		1	

Rev. No./Date | DESIGNED BY | CHECKED BY | APPROVED BY | Dep.

* : Selected at factory

DRAWING No. 44W87150 -05 1/8

ANRITSU CORP.

Ref. No.	Part Code	Description	Rating	Qty	Note
C 24		CER CAP	8p F.50V		
		CC732CH1H080D	± 0.5p F	1	
C 25		CPA10		1	
C 26		CER CAP	470p F		
		CC732CH1H471J	± 5%.50V	1	
C 27		CER CAP	0.5p F.50V		
		CC732CK1H0R5C	± 0.25p F	1	*OPEN
C 28		CER CAP	1000p F		
		CK732B1H102K	± 10%.50V	1	
C 29		CER CAP	4700p F		
		CK732B1H472K	± 10%.50V	1	
C 30		CER CAP	470p F		
		CC732CH1H471J	± 5%.50V	1	
C 31		CER CAP	0.1μ F.50V		
		CK733F1H104Z	+80/-20%	1	
C 32		CER CAP	0.1μ F.50V		
		CK733F1H104Z	+80/-20%	1	
C 33		CER CAP	0.1μ F.50V		
		CK733F1H104Z	+80/-20%	1	
C 34		CER CAP	0.1μ F.50V		
		CK733F1H104Z	+80/-20%	1	
C 35		CER CAP	0.1μ F.50V		
		CK733F1H104Z	+80/-20%	1	
C 36		NOT ASSIGN			
C 37		CER CAP	0.1μ F.50V		
		CK733F1H104Z	+80/-20%	1	
C 38		CER CAP	5p F.50V		
		CC732CH1H050D	± 0.5p F	1	
C 39		CER CAP	10p F.50V		
		CC732CH1H100D	± 0.5p F	1	
C 40		CER CAP	5p F.50V		
		CC732CH1H050D	± 0.5p F	1	
C 41		CER CAP			
		CK732B1H223K		1	
C 42		NOT ASSIGN			
C 43		NOT ASSIGN			
C 44		CER CAP	0.1μ F.50V		
		CK733F1H104Z	+80/-20%	1	
C 45		CER CAP	0.1μ F.50V		
		CK733F1H104Z	+80/-20%	1	
C 46		NOT ASSIGN			

Rev. No./Date

* : Selected at factory

DRAWING No. 44W87150 -05 2/8

ANRITSU CORP.

Ref. No.	Part Code	Description	Rating	Qty	Note
C 47		CER CAP	0.1μ F.50V		
		CK924F1H104Z	+80/-20%	1	
C 48		CER CAP	0.1μ F.50V		
		CK924F1H104Z	+80/-20%	1	
C 49		CER CAP	0.1μ F.50V		
		CK924F1H104Z	+80/-20%	1	
C 50		CER CAP	0.1μ F.50V		
		CK924F1H104Z	+80/-20%	1	
C 51		CER CAP	0.1μ F.50V		
		CK924F1H104Z	+80/-20%	1	
C 52		CER CAP	0.1μ F.50V		
		CK924F1H104Z	+80/-20%	1	
C 53		NOT ASSIGN			
J 1		NOT ASSIGN			
J 2		NOT ASSIGN			
J 3		NOT ASSIGN			
J 4		NOT ASSIGN			
J 5		NOT ASSIGN			
J 6		NOT ASSIGN			
J 7		NOT ASSIGN			
J 8		NOT ASSIGN			
J 9		NOT ASSIGN			
J 10		NOT ASSIGN			
J 11		PLUG DF1-5P-2.5DSA	05PINS	1	
J 12		NOT ASSIGN			
J 13		NOT ASSIGN			
J 14		NOT ASSIGN			
J 15		NOT ASSIGN			

Rev. No./Date

* : Selected at factory

DRAWING No. 44W87150 -05 3/8

ANRITSU CORP.

Ref. No.	Part Code	Description	Rating	Qty	Note
J 16		NOT ASSIGN			
J 17		NOT ASSIGN			
J 18		NOT ASSIGN			
J 19		NOT ASSIGN			
J 20		NOT ASSIGN			
J 21		NOT ASSIGN			
J 22		NOT ASSIGN			
J 23		NOT ASSIGN			
J 24		NOT ASSIGN			
J 25		NOT ASSIGN			
J 26		NOT ASSIGN			
J 27		NOT ASSIGN			
J 28		PLUG DF1-5P-2.5DSA	05PINS	1	
K 1		NOT ASSIGN			
K 2					
K 3		712-12		1	
K 4		712-12		1	
K 5		712-12		1	
K 6					
K 7		GSY-1-H DC12V NOT ASSIGN		1	
K 8					
K 9		GSY-1-H DC12V		1	
		GSY-1-H DC12V		1	

ANRITSU CORP.

Ref. No.	Part Code	Description	Rating	Qty	Note
L 1					
L 2		PATTERN COIL		1	
L 3		PATTERN COIL INDUCTOR 34L74431L	42n H	1	
L 4		INDUCTOR 34L74431L	42n H	1	
L 5		PATTERN COIL		1	
L 6					
L 7		PATTERN COIL		1	
L 8		PATTERN COIL		1	
L 9		PATTERN COIL INDUCTOR 34L74430L		1	
L 10		INDUCTOR 34L74430L		1	
L 11		INDUCTOR 34L74430L		1	
L 12		INDUCTOR 34L74430D		1	
L 13		INDUCTOR 34L74433F	160n H	1	
Q 1		IC μ PC1651G		1	
Q 2		DIODE 1SS97		1	
Q 3		DIODE 1SS97		1	
Q 4					
Q 5		OP07DPS IC μ PC1654A		1	
Q 6		TRANSISTOR 2SC3603		1	
Q 7		ZENER DIODE RD5.1MB2		1	
Q 8		IC μ PC1651G		1	
Q 9		NOT ASSIGN			

ANRITSU CORP.

Ref. No.	Part Code	Description	Rating	Qty	Note
R 1		METAL FILM RESISTOR NRN1/4C4 267Ω D	267Ω ± 0.5%,1/4W	1	
R 2		METAL FILM RESISTOR NRN1/4C4 267Ω D	267Ω ± 0.5%,1/4W	1	
R 3		METAL FILM RESISTOR NRN1/4C4 52.8Ω D	52.8Ω ± 0.5%,1/4W	1	
R 4		METAL FILM RESISTOR NRN1/4C4 144.4Ω D		1	
R 5		METAL FILM RESISTOR NRN1/4C4 144.4Ω D		1	
R 6		METAL FILM RESISTOR NRN1/4C4 116Ω D	116Ω ± 0.5%,1/4W	1	
R 7		METAL FILM RESISTOR NRN1/4C4 91.7Ω D	91.7Ω ± 0.5%,1/4W	1	
R 8		METAL FILM RESISTOR NRN1/4C4 91.7Ω D	91.7Ω ± 0.5%,1/4W	1	
R 9		METAL FILM RESISTOR NRN1/4C4 866Ω F	866Ω ± 1%,1/4W	1	
R 10		METAL FILM RESISTOR NRN1/4C4 91.7Ω D	91.7Ω ± 0.5%,1/4W	1	
R 11		METAL FILM RESISTOR NRN1/4C4 91.7Ω D	91.7Ω ± 0.5%,1/4W	1	
R 12		METAL FILM RESISTOR NRN1/4C4 866Ω F	866Ω ± 1%,1/4W	1	
R 13		METAL FILM RESISTOR RN73G2A150D	15Ω ± 0.5%,1/10W	1	
R 14		METAL FILM RESISTOR RN73G2A300D	30Ω ± 0.5%,1/10W	1	
R 15		METAL FILM RESISTOR RN73G2A300D	30Ω ± 0.5%,1/10W	1	
R 16		METAL FILM RESISTOR RN73G2A471D	470Ω ± 0.5%,1/10W	1	
R 17		METAL FILM RESISTOR RN73G2A471D	470Ω ± 0.5%,1/10W	1	
R 18		METAL FILM RESISTOR RN73G2A220D	22Ω ± 0.5%,1/10W	1	
R 19		METAL FILM RESISTOR RN73G2A431D	430Ω ± 0.5%,1/10W	1	
R 20		METAL FILM RESISTOR RN73G2A431D	430Ω ± 0.5%,1/10W	1	
R 21		METAL FILM RESISTOR RN73G2A110D	11Ω ± 0.5%,1/10W	1	
R 22		CERMET RESISTOR RK73M2A331J	330Ω ± 5%,1/10W	1	
R 23		METAL FILM RESISTOR RN73G2A301D	300Ω ± 0.5%,1/10W	1	

ANRITSU CORP.

Ref. No.	Part Code	Description	Rating	Qty	Note
R 24		METAL FILM RESISTOR RN73G2A104D	100k Ω ± 0.5%,1/10W	1	
R 25		METAL FILM RESISTOR RN73G2A104D	100k Ω ± 0.5%,1/10W	1	
R 26		METAL FILM RESISTOR RN73G2A273D	27k Ω ± 0.5%,1/10W	1	
R 27		METAL FILM RESISTOR RN73G2A152D	1.5k Ω ± 0.5%,1/10W	1	
R 28		METAL FILM RESISTOR RN73G2A121D	120Ω ± 0.5%,1/10W	1	
R 29		CERMET RESISTOR RK73M2A510J	51Ω ± 5%,1/10W	1	
R 30		CERMET RESISTOR RK73M2A510J	51Ω ± 5%,1/10W	1	
R 31		CERMET RESISTOR RK73M2A510J	51Ω ± 5%,1/10W	1	
R 32		CERMET RESISTOR RK73M2A510J	51Ω ± 5%,1/10W	1	
R 33		CERMET RESISTOR RK73M2A510J	51Ω ± 5%,1/10W	1	
R 34		CERMET RESISTOR RK73M2A331J	330Ω ± 5%,1/10W	1	
R 35		CERMET RESISTOR RK73M2A331J	330Ω ± 5%,1/10W	1	
R 36		NOT ASSIGN			
R 37		METAL FILM RESISTOR RN73G2A151D	150Ω ± 0.5%,1/10W	1	
R 38		NOT ASSIGN			
R 39		CERMET RESISTOR RK73M2A331J	330Ω ± 5%,1/10W	1	
R 40		NOT ASSIGN			
R 41		METAL FILM RESISTOR RN73G2A750D	75Ω ± 0.5%,1/10W	1	
R 42		RS1FS470JL		1	
R 43		NOT ASSIGN			
R 44		NOT ASSIGN			
R 45		VARIABLE RESISTOR RG064B203H	20k Ω ± 20%,1/4W	1	*
R 46		NOT ASSIGN			

ANRITSU CORP.

Parts List of: A2-A2 AUX CONV 15

Ref. No.	Part Code	Description	Rating	Qty	Note
R 47		METAL FILM RESISTOR	332Ω		
		NRN1/4C4 332Ω D	± 0.5%,1/4W	1	
R 48		METAL FILM RESISTOR	1.43k Ω		
		NRN1/4C4 1.43KΩ F	± 1%,1/4W	1	
R 49		METAL FILM RESISTOR	654Ω		
		NRN1/4C4 654Ω D	± 0.5%,1/4W	1	
R 50		METAL FILM RESISTOR	654Ω		
		NRN1/4C4 654Ω D	± 0.5%,1/4W	1	
R 51		METAL FILM RESISTOR	100Ω		
		RN73G2A101D	± 0.5%,1/10W	1	
R 52		CERMET RESISTOR	22Ω		
		RK73M2A220J	± 5%,1/10W	1	
R 53		METAL FILM RESISTOR	390Ω		
		RN73G2A391D	± 0.5%,1/10W	1	
R 54		METAL FILM RESISTOR	390Ω		
		RN73G2A391D	± 0.5%,1/10W	1	
R 55		METAL FILM RESISTOR	22Ω		
		RN73G2A220D	± 0.5%,1/10W	1	
R 56		METAL FILM RESISTOR	270Ω		
		RN73G2A271D	± 0.5%,1/10W	1	
R 57		METAL FILM RESISTOR	270Ω		
		RN73G2A271D	± 0.5%,1/10W	1	
R 58		METAL FILM RESISTOR	47Ω		
		RN73G2A470D	± 0.5%,1/10W	1	
R 59		NOT ASSIGN			
R 60		NOT ASSIGN			
R 61		NOT ASSIGN			
R 62		NOT ASSIGN			
R 63		NOT ASSIGN			
Z 1		WJ-2K5		1	
Z 2		ATT			
		PAT16J2C-02DB-T		1	

* : Selected at factory — DRAWING No. 44087150 -05 — 8/8

ANRITSU CORP.

Ref. No.	Part Code	Description	Rating	Qty	Note
C 1		CER CAP	8p F,50V		
		CC732CH1H080D (t b	± 0.5p F	1	
C 2		METAL FILM VAR CAP			
		CPA10		1	
C 3		METAL FILM VAR CAP			
		CPA2		1	
C 4		NOT ASSIGNED			
C 5	2387-10262	CER CAP	0.1μ F,50V		
		CK733F1H104Z (A 5	+80/-20%	1	
C 6	2387-10262	CER CAP	0.1μ F,50V		
		CK733F1H104Z (A 5	+80/-20%	1	
C 7		CER CAP	1000p F		
		CK73281H102K (A 3	± 10%,50V	1	
C 8		NOT ASSIGNED			
C 9		NOT ASSIGNED			
C 10		NOT ASSIGNED			
C 11		NOT ASSIGNED			
C 12		NOT ASSIGNED			
C 13		NOT ASSIGNED			
C 14		CER CAP	1000p F		
		CK73281H102K (A 3	± 10%,50V	1	
C 15	2387-10246	CER CAP	4700p F		
		CK73281H472K (S 3	± 10%,50V	1	
C 16		CER CAP	1000p F		
		CK73281H102K (A 3	± 10%,50V	1	
C 17	2387-10262	CER CAP	0.1μ F,50V		
		CK733F1H104Z (A 5	+80/-20%	1	
C 18		NOT ASSIGNED			
C 19		METAL FILM VAR CAP			
		CPA10		1	
C 20	2387-02975	CER CAP	100p F		
		CC732CH1H101J (A b	± 5%,50V	1	
C 21	2387-02961	CER CAP	10p F		
		CC732CH1H100D (A b	± 0.5%,50V	1	
C 22	2387-07995	VAR CER CAP	65p F,100V		
		TZ03P650A		1	*
C 23		NOT ASSIGNED			

Dep.

* : Selected at factory — DRAWING No. 44087151 — 1/7

ANRITSU CORP.

Parts List of: A2-A2 AUX CONV

Ref. No.	Part Code	Description	Rating	Qty	Note
C 24	2387-10246	CER CAP	4700p F		
		CK73281H472K (S 3	± 10%,50V	1	
C 25	2387-10246	CER CAP	4700p F		
		CK73281H472K (S 3	± 10%,50V	1	
C 26	2387-10246	CER CAP	4700p F		
		CK73281H472K (S 3	± 10%,50V	1	
C 27	2387-10246	CER CAP	4700p F		
		CK73281H472K (S 3	± 10%,50V	1	
C 28	2387-10246	CER CAP	4700p F		
		CK73281H472K (S 3	± 10%,50V	1	
C 29		NOT ASSIGNED			
C 30		NOT ASSIGNED			
C 31		NOT ASSIGNED			
C 32	2387-10262	CER CAP	0.1μ F,50V		
		CK733F1H104Z (A 5	+80/-20%	1	
C 33	2676-M4226	TA ELECTLT CAP	22μ F		
		CS734E1C226M	± 20%,16V	1	
C 34	2387-10242	CER CAP	1000p F		
		CK73281H102K (A 3	± 10%,50V	1	
C 35	2387-10242	CER CAP	1000p F		
		CK73281H102K (A 3	± 10%,50V	1	
C 36	2387-10242	CER CAP	1000p F		
		CK73281H102K (A 3	± 10%,50V	1	
C 37		CER CAP	1000p F		
		CK73281H102K (A 3	± 10%,50V	1	
C 38	2387-10242	CER CAP	1000p F		
		CK73281H102K (A 3	± 10%,50V	1	
C 39	2387-10242	CER CAP	1000p F		
		CK73281H102K (A 3	± 10%,50V	1	
C 40	2387-10242	CER CAP	1000p F		
		CK73281H102K (A 3	± 10%,50V	1	
C 41		CER CAP	1000p F		
		CK73281H102K (A 3	± 10%,50V	1	
C 42		CER CAP	1000p F		
		CK73281H102K (A 3	± 10%,50V	1	
C 43		CER CAP	0.1μ F,50V		
		CK733F1H104Z (A 5	+80/-20%	1	
J 1		NOT ASSIGNED			
J 2		NOT ASSIGNED			

Dep.

* : Selected at factory — DRAWING No. 44087151 — 2/7

ANRITSU CORP.

Parts List of: A2-A2 AUX CONV

Ref. No.	Part Code	Description	Rating	Qty	Note
J 3		NOT ASSIGNED			
J 4		NOT ASSIGNED			
J 5		NOT ASSIGNED			
J 6		NOT ASSIGNED			
J 7		PLUG			
		27DP-R-PC		1	
J 8		PLUG			
		27DP-R-PC		1	
J 9		NOT ASSIGNED			
J 10		NOT ASSIGNED			
J 11		NOT ASSIGNED			
J 12		PLUG	3P		
		DF1-3P-2.5DSA		1	
J 13		NOT ASSIGNED			
J 14		NOT ASSIGNED			
J 15		NOT ASSIGNED			
J 16		NOT ASSIGNED			
J 17		NOT ASSIGNED			
J 18		NOT ASSIGNED			
J 19		NOT ASSIGNED			
J 20		NOT ASSIGNED			
J 21		NOT ASSIGNED			
J 22		NOT ASSIGNED			
J 23		NOT ASSIGNED			
J 24		NOT ASSIGNED			
J 25		NOT ASSIGNED			

Dep.

* : Selected at factory — DRAWING No. 44087151 — 3/7

ANRITSU CORP.

Parts List of: A2-A2 AUX CONV

Ref. No.	Part Code	Description	Rating	Qty	Note
J 26		NOT ASSIGNED			
J 27		NOT ASSIGNED			
J 28		NOT ASSIGNED			
J 29		NOT ASSIGNED			
J 30		PLUG DF1-3P-2.5DSA	3P	1	
K 1		NOT ASSIGNED			
K 2		RELAY 712-12		1	
K 3		RELAY 712-12		1	
K 4		RELAY 712-12		1	
K 5		NOT ASSIGNED			
K 6		RELAY G5Y-1-H DC12V		1	
L 1					
L 2		PATTERN COIL			
L 3		PATTERN COIL INDUCTOR 34L7443DL		1	
L 4		INDUCTOR 34L7443DL		1	
L 5		NOT ASSIGNED			
L 6		INDUCTOR NL453232-1R5K	1.5μH±10%	1	
L 7		INDUCTOR NL322522-R15K	0.15μH±10%	1	
L 8		NOT ASSIGNED			
L 9		INDUCTOR	1.0mH±10%		
L 10		NL453232-102K INDUCTOR NL453232-102K	1.0mH±10%	1 1	

* : Selected at factory

DRAWING No. 44087151 4/7

No.D073-1988.11

ANRITSU CORP.

Parts List of: A2-A2 AUX CONV

Ref. No.	Part Code	Description	Rating	Qty	Note
Q 1		NOT ASSIGNED			
Q 2		NOT ASSIGNED			
Q 3		NOT ASSIGNED			
Q 4		NOT ASSIGNED			
Q 5		IC MWA220		1	
Q 6		ZENER DIODE RD5.1MB2 (S12)		1	
Q 7		TRANSISTOR 2SC2351 (R2 OR R3)		1	
Q 8		DIODE 1S2837 (AS)		1	
Q 9		DIODE 1S2837 (AS)		1	
Q 10		IC μPC1651G		1	
Q 11		NOT ASSIGNED			
R 1	4211-21002	METAL FILM RESISTOR NRN1/4C4 144.4Ω D		1	
R 2	4211-21002	METAL FILM RESISTOR NRN1/4C4 144.4Ω D		1	
R 3		METAL FILM RESISTOR NRN1/4C4 116Ω D	116Ω ±0.5%,1/4W	1	
R 4	4211-21002	METAL FILM RESISTOR NRN1/4C4 144.4Ω D		1	
R 5	4211-21002	METAL FILM RESISTOR NRN1/4C4 144.4Ω D		1	
R 6		METAL FILM RESISTOR NRN1/4C4 116Ω D	116Ω ±0.5%,1/4W	1	
R 7	4211-D91R7	METAL FILM RESISTOR NRN1/4C4 91.7Ω D	91.7Ω ±0.5%,1/4W	1	
R 8	4211-D91R7	METAL FILM RESISTOR NRN1/4C4 91.7Ω D	91.7Ω ±0.5%,1/4W	1	
R 9		METAL FILM RESISTOR NRN1/4C4 866Ω F	866Ω ±1%,1/4W	1	
R 10		METAL FILM RESISTOR RN73G2A471D	470Ω ±0.5%,1/10W	1	

* : Selected at factory

DRAWING No. 44087151 5/7

No.D073-1988.11

ANRITSU CORP.

Parts List of: A2-A2 AUX CONV

Ref. No.	Part Code	Description	Rating	Qty	Note
R 11		METAL FILM RESISTOR RN73G2A471D	470Ω ±0.5%,1/10W	1	
R 12		METAL FILM RESISTOR RN73G2A270D	27Ω ±0.5%,1/10W	1	
R 13		NOT ASSIGNED			
R 14		METAL FILM RESISTOR RN73G2A181D	180Ω ±0.5%,1/10W	1	
R 15		METAL FILM RESISTOR RN73G2A181D	180Ω ±0.5%,1/10W	1	
R 16		METAL FILM RESISTOR RN73G2A30DD	30Ω ±0.5%,1/10W	1	
R 17		NOT ASSIGNED			
R 18		NOT ASSIGNED			
R 19		METAL FILM RESISTOR RN73G2A331D	330Ω ±0.5%,1/10W	1	
R 20		METAL FILM RESISTOR RN73G2A331D	330Ω ±0.5%,1/10W	1	
R 21		METAL FILM RESISTOR RN73G2A150D	15Ω ±0.5%,1/10W	1	
R 22		CERMET RESISTOR RK73M2A510J	51Ω ±5%,1/10W	1	
R 23		CERMET RESISTOR RK73M2A510J	51Ω ±5%,1/10W	1	
R 24		METAL FILM RESISTOR RN73G2A471D	470Ω ±0.5%,1/10W	1	
R 25		METAL FILM RESISTOR RN73G2A100D	10Ω ±0.5%,1/10W	1	
R 26		METAL FILM RESISTOR RS1FS331JL		1	
R 27		CERMET RESISTOR RK73M2A510J	51Ω ±5%,1/10W	1	
R 28		CERMET RESISTOR RK73M2A510J	51Ω ±5%,1/10W	1	
R 29		METAL FILM RESISTOR RN73G2A471D	470Ω ±0.5%,1/10W	1	
R 30		METAL FILM RESISTOR RN73G2A681D	680Ω ±0.5%,1/10W	1	
R 31		CERMET RESISTOR RK73M2A221J	220Ω ±5%,1/10W	1	
R 32		CERMET RESISTOR RK73M2A4R7J	4.7Ω ±5%,1/10W	1	
R 33		NOT ASSIGNED			

* : Selected at factory

DRAWING No. 44087151 6/7

No.D073-1988.11

ANRITSU CORP.

Parts List of: A2-A2 AUX CONV

Ref. No.	Part Code	Description	Rating	Qty	Note
R 34		NOT ASSIGNED			
R 35		NOT ASSIGNED			
R 36		CERMET RESISTOR RK73M2A331J	330Ω ±5%,1/10W	1	
R 37		NOT ASSIGNED			
R 38		NOT ASSIGNED			
R 39		METAL FILM RESISTOR RN73G2A221D	220Ω ±0.5%,1/10W	1	
R 40		METAL FILM RESISTOR RN73G2A22DD	22Ω ±0.5%,1/10W	1	
R 41		METAL FILM RESISTOR RN73G2A221D	220Ω ±0.5%,1/10W	1	
R 42		METAL FILM RESISTOR NRN1/4C4 1.43KΩ F	1.43KΩ ±1%,1/4W	1	
R 43		METAL FILM RESISTOR NRN1/4C4 1.43KΩ F	1.43KΩ ±1%,1/4W	1	
R 44		METAL FILM RESISTOR NRN1/4C4 654Ω D	654Ω ±0.5%,1/4W	1	
R 45		METAL FILM RESISTOR RN73G2A221D	220Ω ±0.5%,1/10W	1	
R 46		METAL FILM RESISTOR RN73G2A221D	220Ω ±0.5%,1/10W	1	
R 47		METAL FILM RESISTOR RN73G2A240D	24Ω ±0.5%,1/10W	1	
R 48		METAL FILM RESISTOR RN73G2A330D	33Ω ±0.5%,1/10W	1	
Z 1		MIXER M2(T0-5)		1	
Z 2		MIXER M-16(T0-5)		1	
Z 3		ﾌｨﾙﾀ AHT-480M		1	

* : Selected at factory

DRAWING No. 44087151 7/7

No.D073-1988.11

ANRITSU CORP.

Parts List of: ME4510A 15
DMR-A RX
A2-A4 1ST LOCAL AMP

Ref. No.	Part Code	Description	Rating	Qty	Note
C 1		CER CAP	100p F		
		CC73ZCH1H101J	± 5%.50V	1	
C 2		CER CAP	100p F		
		CC73ZCH1H101J	± 5%.50V	1	
C 3		CER CAP	4700p F		
		CK73ZB1H472K	± 10%.50V	1	
C 4		CER CAP	2p F.50V		
		CC73ZCK1H020C	± 0.25p F	1	
C 5		CER CAP	2p F.50V		
		CC73ZCK1H020C	± 0.25p F	1	
C 6		CER CAP	3p F.50V		
		CC73ZCJ1H030C	± 0.25p F	1	
C 7		CER CAP	100p F		
		CC73ZCH1H101J	± 5%.50V	1	
C 8		CER CAP	100p F		
		CC73ZCH1H101J	± 5%.50V	1	
C 9		CER CAP	4700p F		
		CK73ZB1H472K	± 10%.50V	1	
C 10		CER CAP	4p F.50V		
		CC73ZCH1H040D	± 0.5p F	1	
C 11		CER CAP	3p F.50V		
		CC73ZCJ1H030C	± 0.25p F	1	
C 12		CER CAP	1000p F		
		CK73ZB1H102K	± 10%.50V	1	
C 13		CER CAP	4700p F		
		CK73ZB1H472K	± 10%.50V	1	
C 14		CER CAP	33p F		
		CC73ZCH1H330J	± 5%.50V	1	
C 15		CER CAP	4700p F		
		CK73ZB1H472K	± 10%.50V	1	
C 16		CER CAP	100p F		
		CC73ZCH1H101J	± 5%.50V	1	
C 17		CER CAP	4700p F		
		CK73ZB1H472K	± 10%.50V	1	
C 18		CER CAP	4700p F		
		CK73ZB1H472K	± 10%.50V	1	
C 19		CER CAP	1000p F		
		CK73ZB1H102K	± 10%.50V	1	
C 20		AL ELECTLT CAP	47μ F		
		CE04C1E470A	± 20%.25V	1	
C 21		CER CAP	0.1μ F.50V		
		CK733F1H104Z	+80/-20%	1	
C 22		CER CAP	4p F		
		CC73ZCH1H040C	± 0.5p F.50V	1	

* Selected at factory — DRAWING No. 44WR7153 -02 — 1/3

ANRITSU CORP.

Ref. No.	Part Code	Description	Rating	Qty	Note
L 1		INDUCTOR	0.15μ H± 10%		
		NL322522-R15K		1	
L 2		INDUCTOR	0.15μ H± 10%		
		NL322522-R15K		1	
L 3		PATTERN COIL		1	
L 4		INDUCTOR	0.10μ H± 10%		
		NL322522-R10K		1	
L 5		PATTERN COIL		1	
L 6		INDUCTOR	0.15μ H± 10%		
		NL322522-R15K		1	
L 7		INDUCTOR			
		34L7443GJ		1	
Q 1		MWA330		1	
Q 2		MWA330		1	
Q 3		NEL230153		1	
Q 4		ZENER DIODE			
		RD11EB		1	
Q 5		ZENER DIODE			
		RD5.1MB2		1	
Q 6		2SC3355		1	
R 1		CERMET RESISTOR	47Ω		
		RK73M2A470J	± 5%.1/10W	1	
R 2		CERMET RESISTOR	47Ω		
		RK73M2A470J	± 5%.1/10W	1	
R 3		RS1FS151JL		1	
R 4		RS1FS151JL		1	
R 5		NOT ASSIGN			
R 6		CERMET RESISTOR	220Ω		
		RK73M2A221J	± 5%.1/10W	1	
R 7		RS2FS220JL		1	
R 8		RS1FS151JL		1	

* Selected at factory — DRAWING No. 44WR7153 -02 — 2/3

ANRITSU CORP.

Ref. No.	Part Code	Description	Rating	Qty	Note
R 9		METAL FILM RESISTOR	100Ω		
		RN73G2A101D	± 0.5%.1/10W	1	
R 10		METAL FILM RESISTOR	1k Ω		
		RN73G2A102D	± 0.5%.1/10W	1	
R 11		CERMET RESISTOR	4.7Ω		
		RK73M2A4R7J	± 5%.1/10W	1	
R 12		METAL FILM RESISTOR	100Ω		
		RN73G2A101D	± 0.5%.1/10W	1	
R 13		NOT ASSIGNED			
R 14		NOT ASSIGNED			
R 15		CERMET RESISTOR	4.7Ω		
		RN73M2A4R7J	± 5%.1/10W	1	

* Selected at factory — DRAWING No. 44WR7153 -02 — 3/3

ANRITSU CORP.

Parts List of: A2-A5 BPF 15

Ref. No.	Part Code	Description	Rating	Qty	Note
C 1		CER CAP	0.1μ F.50V		
		CK733F1H104Z (A 5	+80/-20%	1	
C 2		NOT ASSIGNED			
C 3		NOT ASSIGNED			
C 4		NOT ASSIGNED			
C 5	2387-10246	CER CAP	4700p F		
		CK73281H472K (S 3	± 10%.50V	1	
C 6	2387-10246	CER CAP	4700p F		
		CK73281H472K (S 3	± 10%.50V	1	
L 1		INDUCTOR	0.15μ H± 10%		
		NL322522-R15K		1	
U 1		IC			
		MC5192		1	
Z 1		FILTER.BPF			
		231MT-1054A		1	
Z 2		FILTER.BPF			
		232MT-1040A		1	

* Selected at factory — DRAWING No. 44W87154 — 1/1

ANRITSU CORP.

Parts List of: A2-A6 IF AMP 15

Ref. No.	Part Code	Description	Rating	Qty	Note
C 1		CER CAP CC732CH1H102J		1	
C 2	2387-10246	CER CAP CK732B1H472K (S 3	4700p F ± 10%,50V	1	
C 3		CER CAP CC732CH1H102J		1	
C 4	2387-10246	CER CAP CK732B1H472K (S 3	4700p F ± 10%,50V	1	
C 5	2387-10246	CER CAP CK732B1H472K (S 3	4700p F ± 10%,50V	1	
C 6	2387-10246	CER CAP CK732B1H472K (S 3	4700p F ± 10%,50V	1	
C 7		CER CAP CK732B1H472K (S 3	4700p F ± 10%,50V	1	
C 8	2387-10246	CER CAP CK732B1H472K (S 3	4700p F ± 10%,50V	1	
C 9		NOT ASSIGNED			
C 10	2387-10262	CER CAP CK733F1H104Z (A 5	0.1μ F,50V +80/-20%	1	
C 11		NOT ASSIGNED			
C 12	2387-10262	CER CAP CK733F1H104Z (A 5	0.1μ F,50V +80/-20%	1	
C 13		METAL FILM VAR CAP CPA10		1	
C 14	2387-02975	CER CAP CC732CH1H101J (A 6	100p F ± 5%,50V	1	
C 15	2387-02961	CER CAP CC732CH1H100D (A 6	10p F ± 0.5%,50V	1	
C 16	2387-07995	VAR CER CAP TZ03P450A	45p F,100V	1	*
J 1		NOT ASSIGNED			
J 2		NOT ASSIGNED			
J 3		NOT ASSIGNED			
J 4		NOT ASSIGNED			
J 5		NOT ASSIGNED			

Ref No./Date | DESIGNED BY | CHECKED BY | APPROVED BY | Dep.

* : Selected at factory | DRAWING No. 44UM/155 | 1/4

No D073-1988.11

ANRITSU CORP.

Parts List of: A2-A6 IF AMP

Ref. No.	Part Code	Description	Rating	Qty	Note
J 6		NOT ASSIGNED			
J 7		NOT ASSIGNED			
J 8		NOT ASSIGNED			
J 9		NOT ASSIGNED			
J 10		NOT ASSIGNED			
J 11		NOT ASSIGNED			
J 12		NOT ASSIGNED			
J 13		PLUG DF1-2P-2.5DSA	2P	1	
L 1		NOT ASSIGNED			
L 2		NOT ASSIGNED			
L 3		INDUCTOR NL453232-102K	1.0mH,± 10%	1	
L 4		NOT ASSIGNED			
L 5		INDUCTOR NL453232-102K	1.0mH,± 10%	1	
L 6		INDUCTOR NL453232-102K	1.0mH,± 10%	1	
L 7		INDUCTOR NL453232-102K	1.0mH,± 10%	1	
L 8		INDUCTOR NL453232-102K	1.0mH,± 10%	1	
L 9		INDUCTOR NL453232-102K	1.0mH,± 10%	1	
L 10		INDUCTOR NL453232-102K	1.0mH,± 10%	1	
L 11		INDUCTOR NL453232-1R5K	1.5μ H,± 10%	1	
L 12		INDUCTOR NL322522-R15K	0.15μ H± 10%	1	
L 13		INDUCTOR NL322522-R15K	0.15μ H± 10%	1	

Ref No./Date | DESIGNED BY | CHECKED BY | APPROVED BY | Dep.

* : Selected at factory | DRAWING No. 44UM155 | 2/4

No D073-1988.11

ANRITSU CORP.

Parts List of: A2-A6 IF AMP

Ref. No.	Part Code	Description	Rating	Qty	Note
Q 1		TR 2SC2351 (R2 OR R3)		1	
Q 2		ZENER DIODE RD5.1M2B (512)		1	
Q 3		DIODE 1S2835 (A3)		1	
Q 4		DIODE 1S2835 (A3)		1	
Q 5		DIODE 1S2835 (A3)		1	
Q 6		DIODE 1S2835 (A3)		1	
Q 7		DIODE 1S2837 (A5)		1	
Q 8		DIODE 1S2837 (A5)		1	
Q 9		IC MWA220		1	
R 1		CERMET RESISTOR	51Ω		
R 2		RK73M2A510J CERMET RESISTOR	± 5%,1/10W 51Ω	1	
R 3		RK73M2A510J METAL FILM RESISTOR	± 5%,1/10W 470Ω	1	
R 4		RN73G2A471D METAL FILM RESISTOR	± 0.5%,1/10W 820Ω	1	
R 5		RN73G2A821D CERMET RESISTOR	± 0.5%,1/10W 220Ω	1	
R 6		RK73M2A221J METAL FILM RESISTOR	± 5%,1/10W	1	
R 7		RS1FS331JL METAL FILM RESISTOR		1	
R 8		RS1FS221JL METAL FILM RESISTOR		1	
R 9		RS1FS221JL METAL FILM RESISTOR	470Ω		
R 10		RN73G2A471D METAL FILM RESISTOR	± 0.5%,1/10W 10Ω	1	
R 11		RN73G2A100D METAL FILM RESISTOR	± 0.5%,1/10W 10Ω	1	
R 12		RN73G2A100D METAL FILM RESISTOR	± 0.5%,1/10W 22Ω	1	
		RN73G2A33UD	± 0.5%,1/10W	1	

Ref No./Date | DESIGNED BY | CHECKED BY | APPROVED BY | Dep.

* : Selected at factory | DRAWING No. 44UM | 3/4

No D073-1988.11

ANRITSU CORP.

Parts List of: A2-A6 IF AMP

Ref. No.	Part Code	Description	Rating	Qty	Note
Z 1		MIXER M-16(TO-5)		1	

Ref No./Date | DESIGNED BY | CHECKED BY | APPROVED BY | Dep.

* : Selected at factory | DRAWING No. 44UM155 | 4/4

No D073-1988.11

ANRITSU CORP.

Parts List of: A2-A7 2ND LOCAL AMP 15

Ref. No.	Part Code	Description	Rating	Qty	Note
C 1	2387-10262	CER CAP	0.1μF.50V		
		CK733F1H104Z (A 5	+80/-20%	1	
C 2		NOT ASSIGNED			
C 3		NOT ASSIGNED			
C 4		CER CAP	4700p F		
		CK732B1H472K (S 3	± 10%.50V	1	
C 5		CER CAP			
		CC732CH1H102J		1	
C 6		CC732CH1H102J		1	
C 7	2387-10246	CER CAP	4700p F		
		CK732B1H472K (S 3	± 10%.50V	1	
C 8	2387-07992	CER CAP	11p F.100V		
		TZ03T110A		1	
C 9	2387-02956	CER CAP	5p F.50V		
		CC732CH1H050D (f b	± 0.5p F	1	
C 10		CER CAP			
		CC732CH1H102J		1	
C 11		CER CAP			
		CC732CH1H102J		1	
C 12	2387-10246	CER CAP	4700p F		
		CK732B1H472K (S 3	± 10%.50V	1	
C 13		CER CAP			
		CC732CH1H102J		1	
C 14		CER CAP			
		CC732CH1H102J		1	
C 15	2387-10246	CER CAP	4700p F		
		CK732B1H472K (S 3	± 10%.50V	1	
C 16	2387-10262	CER CAP	0.1μF.50V		
		CK733F1H104Z (A 5	+80/-20%	1	
C 17		CER CAP	4700p F		
		CK732B1H472K (S 3	± 10%.50V	1	
C 18		CER CAP			
		CC732CH1H102J		1	
C 19	2387-10246	CER CAP	4700p F		
		CK732B1H472K (S 3	± 10%.50V	1	
C 20		CER CAP			
		CC732CH1H102J		1	
C 21		CER CAP			
		CC732CH1H102J		1	
C 22	2387-10246	CER CAP	4700p F		
		CK732B1H472K (S 3	± 10%.50V	1	
C 23		CER CAP			
		CC732CH1H102J		1	

• Selected at factory

DRAWING No. 44087156 1/4

No.D073-1988.11

ANRITSU CORP.

Parts List of: A2-A7 2ND LOCAL AMP

Ref. No.	Part Code	Description	Rating	Qty	Note
C 24		NOT ASSIGNED			
C 25		CER CAP	4700p F		
		CK732B1H472K (S 3	± 10%.50V	1	
C 26		CER CAP			
		CC732CH1H102J		1	
C 27		CER CAP			
		CC732CH1H102J		1	
L 1		NOT ASSIGNED			
L 2		NOT ASSIGNED			
L 3		PATTERN COIL			
L 4		INDUCTOR			
		BK13-55		1	
L 5		NOT ASSIGNED			
L 6		INDUCTOR	0.15μH± 10%		
		NL322522-R15K		1	
L 7		INDUCTOR	0.15μH± 10%		
		NL322522-R15K		1	
Q 1		NOT ASSIGNED			
Q 2		IC			
		μPC1654A		1	
Q 3		DIODE			
		1SS99		1	
Q 4		DIODE			
		1SS99		1	
Q 5		DIODE			
		1SS99		1	
Q 6		DIODE			
		1SS99		1	
Q 7		IC			
		μPC1654A		1	
Q 8		IC			
		μPC1654A		1	
Q 9		IC			
		2SC3355		1	
Q 10		TR			
		2SC3355		1	

• Selected at factory

DRAWING No. 44087156 2/4

No.D073-1988.11

ANRITSU CORP.

Parts List of: A2-A7 2ND LOCAL AMP

Ref. No.	Part Code	Description	Rating	Qty	Note
Q 11		ZENER DIODE			
		RD5.1MB2 (512)		1	
Q 12		ZENER DIODE			
		RD5.1MB2 (512)		1	
R 1		CERMET RESISTOR	390Ω		
		RK73M2A391J	± 5%.1/10W	1	
R 2		NOT ASSIGNED			
R 3		NOT ASSIGNED			
R 4		NOT ASSIGNED			
R 5		METAL FILM RESISTOR			
		RS1FS470JL		1	
R 6		CERMET RESISTOR	22Ω		
		RK73M2A220J	± 5%.1/10W	1	
R 7		NOT ASSIGNED			
R 8		NOT ASSIGNED			
R 9		METAL FILM RESISTOR			
		RS1FS470JL		1	
R 10		METAL FILM RESISTOR	22Ω		
		RN73G2A22D0	± 0.5%.1/10W	1	
R 11		METAL FILM RESISTOR	47Ω		
		RN73G2A470D	± 0.5%.1/10W	1	
R 12		METAL FILM RESISTOR	1.2KΩ		
		RN73G2A122D	± 0.5%.1/10W	1	
R 13		METAL FILM RESISTOR			
		RS1FS470JL		1	
R 14		CERMET RESISTOR	4.7Ω		
		RK73M2A4R7J	± 5%.1/10W	1	
R 15		NOT ASSIGNED			
R 16		METAL FILM RESISTOR			
		RS1FS151JL		1	
R 17		METAL FILM RESISTOR			
		RS1FS151JL			
R 18		METAL FILM RESISTOR	1.2KΩ		
		RN73G2A122D	± 0.5%.1/10W	1	
R 19		METAL FILM RESISTOR	10Ω		
		RN73G2A100D	± 0.5%.1/10W	1	
R 20		METAL FILM RESISTOR	10Ω		
		RN73G2A10J0	± 0.5%.1/10W	1	

• Selected at factory

DRAWING No. 44087156 3/4

No D073-1988.11

ANRITSU CORP.

Parts List of: A2-A7 2ND LOCAL AMP

Ref. No.	Part Code	Description	Rating	Qty	Note
X 1		XTAL OSC			
		NSA0061A 160.0000MH		1	
Z 1		FILTER, 8PF			
		AHT-480M		1	

• Selected at factory

DRAWING No. 44087156 4/4

No D073-1988.11

ANRITSU CORP.

Parts List of: A2-A8 3RD CONVERTER 1/8

Ref. No.	Part Code	Description	Rating	Qty	Note
C 1		CER CAP	12p F		
		CC732CH1H120J (C b	± 5%,50V	1	
C 2		CER CAP	120p F		
		CC732CH1H121J (C b	± 5%,50V	1	
C 3		CER CAP	68p F		
		CC732CH1H680J (W b	± 5%,50V	1	
C 4		CER CAP	12p F		
		CC732CH1H120J (C b	± 5%,50V	1	
C 5		CER CAP	18p F		
		CC732CH1H180J (G b	± 5%,50V	1	
C 6		CER CAP	7p F,50V		
		CC732CH1H070D (n b	± 0.5p F	1	
C 7		CER CAP	7p F,50V		
		CC732CH1H070D (n b	± 0.5p F	1	
C 8		CER CAP	10p F,50V		
		CC732CH1H100D (A b	± 0.5p F	1	
C 9		CER CAP	6p F,50V		
		CC732CH1H060D (m b	± 0.5p F	1	
C 10		CER CAP	22p F		
		CC732CH1H220J (J b	± 5%,50V	1	
C 11		CER CAP	8p F,50V		
		CC732CH1H080D (t b	± 0.5p F	1	
C 12		CER CAP	3p F,50V		
		CC732CJ1H030C (M b	± 0.25p F	1	
C 13		CER CAP	2p F,50V		
		CC732CK1H020C (H b	± 0.25p F	1	
C 14		CER CAP	27p F		
		CC732CH1H270J (L b	± 5%,50V	1	
C 15		CER CAP	4p F,50V		
		CC732CH1H040D (d b	± 0.5p F	1	
C 16		CER CAP	2p F,50V		
		CC732CK1H020C (H b	± 0.25p F	1	
C 17		CER CAP	15p F		
		CC732CH1H150J (E b	± 5%,50V	1	
C 18		CER CAP	22p F		
		CC732CH1H220J (J b	± 5%,50V	1	
C 19		CER CAP	8p F,50V		
		CC732CH1H080D (t b	± 0.5p F	1	
C 20		CER CAP	6p F,50V		
		CC732CH1H060D (m b	± 0.5p F	1	
C 21		CER CAP	56p F		
		CC732CH1H560J (U b	± 5%,50V	1	
C 22		CER CAP	33p F		
		CC732CH1H330J (N b	± 5%,50V	1	
C 23		NOT ASSIGNED			

* Selected at factory

DRAWING No. 44W87157 1/8

No.D073-1988.11

ANRITSU CORP.

Parts List of: A2-A8 3RD CONVERTER 2/8

Ref. No.	Part Code	Description	Rating	Qty	Note
C 24		NOT ASSIGNED			
C 25		CER CAP			
		CK733B1H104K		1	
C 26		CER CAP			
		CK733B1H104K		1	
C 27		CER CAP			
		CK733B1H104K		1	
C 28		CER CAP			
		CK733B1H104K		1	
C 29		CER CAP	0.1μ F,50V		
		CK733F1H104Z (A 5	+80/-20%	1	
C 30		CER CAP	0.1μ F,50V		
		CK733F1H104Z (A 5	+80/-20%	1	
C 31		CER CAP	0.1μ F,50V		
		CK733F1H104Z (A 5	+80/-20%	1	
C 32		CER CAP	0.01μ F		
		CK732B1H103K (A 4	± 10%,50V	1	
C 33		CER CAP	0.1μ F,50V		
		CK733F1H104Z (A 5	+80/-20%	1	
C 34		CER CAP	0.01μ F		
		CK732B1H103K (A 4	± 10%,50V	1	
C 35		NOT ASSIGNED			
C 36		NOT ASSIGNED			
C 37		NOT ASSIGNED			
C 38		NOT ASSIGNED			
C 39		CER CAP	15p F		
		CC732CH1H150J (E b	± 5%,50V	1	
C 40		CER CAP	0.1μ F,50V		
		CK733F1H104Z (A 5	+80/-20%	1	
C 41		CER CAP	0.1μ F,50V		
		CK733F1H104Z (A 5	+80/-20%	1	
C 42		CER CAP	0.1μ F,50V		
		CK733F1H104Z (A 5	+80/-20%	1	
C 43		CER CAP	0.1μ F,50V		
		CK733F1H104Z (A 5	+80/-20%	1	
C 44		NOT ASSIGNED			
C 45	2192-Y0107	AL ELECTLT CAP	100μ F		
		CED4C1E101A	± 20%,25V	1	
C 46	2192-Y0107	AL ELECTLT CAP	100μ F		
		CED4C1E101A	± 20%,25V	1	

* Selected at factory

DRAWING No. 44W87157 2/8

No.D073-1988.11

ANRITSU CORP.

Parts List of: A2-A8 3RD CONVERTER

Ref. No.	Part Code	Description	Rating	Qty	Note
C 47	2192-Y0476	AL ELECTLT CAP	47μ F		
		CED4C1E470A	± 20%,25V	1	
C 48	2179-Y0107	AL ELECTLT CAP	100μ F		
		CED4C1A101A	± 20%,10V	1	
C 49	2192-Y0476	AL ELECTLT CAP	47μ F		
		CED4C1E470A	± 20%,25V	1	
C 50		CER CAP	0.1μ F,50V		
		CK733F1H104Z (A 5	+80/-20%	1	
C 51		CER CAP	0.1μ F,50V		
		CK733F1H104Z (A 5	+80/-20%	1	
C 52		CER CAP	0.1μ F,50V		
		CK733F1H104Z (A 5	+80/-20%	1	
C 53		CER CAP	0.1μ F,50V		
		CK733F1H104Z (A 5	+80/-20%	1	
C 54		NOT ASSIGNED			
C 55		CER CAP	0.1μ F,50V		
		CK733F1H104Z (A 5	+80/-20%	1	
C 56		NOT ASSIGNED			
C 57		CER CAP	2p F,50V		
		CC732CK1H020C (H b	± 0.25p F	1	
C 58	2237-F0432	PLSTC FILM CAP	4300p F		
		ECQ-P1432FZ	± 1%,100V	1	
C 59		CER CAP	82p F		
		CC732CH1H820J (Y b	± 5%,50V	1	
C 60	2237-F0432	PLSTC FILM CAP	4300p F		
		ECQ-P1432FZ	± 1%,100V	1	
C 61		CER CAP	82p F		
		CC732CH1H820J (Y b	± 5%,50V	1	
C 62	2357-G0511	CER CAP	510p F		
		RPE111CH511G50	± 2%,50V	1	
C 63		CER CAP	18p F		
		CC732CH1H180J (G b	± 5%,50V	1	
C 64		CER CAP	0.1μ F,50V		
		CK733F1H104Z (A 5	+80/-20%	1	
C 65		CER CAP	0.1μ F,50V		
		CK733F1H104Z (A 5	+80/-20%	1	
C 66		CER CAP	0.1μ F,50V		
		CK733F1H104Z (A 5	+80/-20%	1	
C 67		CER CAP	0.1μ F,50V		
		CK733F1H104Z (A 5	+80/-20%	1	
C 68		CER CAP	0.1μ F,50V		
		CK733F1H104Z (A 5	+80/-20%		
C 69		CER CAP	0.1μ F,50V		
		CK733F1H104Z (A 5	+80/-20%		

* Selected at factory

DRAWING No. 44W87157 3/8

No.D073-1988.11

ANRITSU CORP.

Parts List of: A2-A8 3RD CONVERTER

Ref. No.	Part Code	Description	Rating	Qty	Note
C 70		CER CAP	0.1μ F,50V		
		CK733F1H104Z (A 5	+80/-20%	1	
C 71		CER CAP	1000p F		
		CK732B1H102K (A 3	± 10%,50V	1	
C 72		CER CAP	1000p F		
		CK732B1H102K (A 3	± 10%,50V	1	
J 1	8104-80061	PLUG			
		DIN41612-90PB		1	
J 2		NOT ASSIGNED			
J 3		NOT ASSIGNED			
J 4		NOT ASSIGNED			
J 5		NOT ASSIGNED			
J 6		NOT ASSIGNED			
J 7		NOT ASSIGNED			
J 8		NOT ASSIGNED			
J 9	8101-10341	RECEPTACLE			
		27DP-LR-PC		1	
J 10		NOT ASSIGNED			
J 11		NOT ASSIGNED			
J 12		NOT ASSIGNED			
J 13		NOT ASSIGNED			
J 14		NOT ASSIGNED			
J 15	8104-02272	PLUG	10P		
		DF1-10P-2.50SA		1	
J 16	8104-02270	PLUG	8P		
		DF1-8P-2.50SA		1	
J 17	8104-02264	PLUG	2P		
		DF1-2P-2.50SA		1	

* Selected at factory

DRAWING No. 44W87157 4/8

No.D073-1988.11

ANRITSU CORP.

Parts List of: A2-A8 3RD CONVERTER

Ref. No.	Part Code	Description	Rating	Qty	Note
K 1		RELAY			
		G5Y-1 DC12V		1	
K 2		RELAY			
		G5Y-1 DC12V		1	
K 3		RELAY			
		TQ2-12V-3		1	
L 1		TRANS			
		33T20195B		1	
L 2		TRANS			
		33T20195E		1	
L 3		TRANS			
		33T20195F		1	
L 4		TRANS			
		33T20195H		1	
L 5		TRANS			
		33T201968		1	
L 6		TRANS			
		33T20195P		1	
L 7		NOT ASSIGNED			
L 8	8054-20309	INDUCTOR	2.2μH.± 10%		
		SP0408-2R2K		1	
L 9	8054-20312	INDUCTOR	6.8μH.± 10%		
		SP0408-6R8K		1	
L 10	8054-40204	INDUCTOR	100μH.± 10%		
		LF8-101K		1	
L 11	8054-40204	INDUCTOR	100μH.± 10%		
		LF8-101K		1	
L 12		TRANS			
		33T201968		1	
L 13		TRANS			
		33T201968		1	
L 14		TRANS			
		339T20197H		1	
L 15		INDUCTOR	0.47μH± 10%		
		SP0408-R47K		1	
L 16		INDUCTOR	10μH.± 10%		
		LF8-100K		1	
L 17		INDUCTOR	1.0μH.± 10%		
		NL453232-1R0K		1	
L 18		INDUCTOR	1.0μH.± 10%		
		NL453232-1R0K		1	

Rev. No./Date | DESIGNED BY | APPROVED BY | Dep.

* : Selected at factory | DRAWING No. 44W87157 | 5/8

No.0073-1988.11

ANRITSU CORP.

Parts List of: A2-A8 3RD CONVERTER

Ref. No.	Part Code	Description	Rating	Qty	Note
M 1		NOT ASSIGNED			
Q 1		TR			
		2SC3355		1	
Q 2		TR			
		2SC2351 (R2 OR R3)		1	
Q 3		ZENER DIODE			
		RD5.1M2 (512)		1	
Q 4		TR			
		2SC2351 (R2 OR R3)		1	
Q 5		TR			
		2SC2351 (R2 OR R3)		1	
Q 6		ZENER DIODE			
		RD5.1M2 (512)		1	
Q 7		ZENER DIODE			
		RD5.1M2 (512)		1	
Q 8		IC			
		LM833M		1	
Q 9		IC			
		LH4001CN		1	
Q 10		NOT ASSIGNED			
Q 11		NOT ASSIGNED			
Q 12		NOT ASSIGNED			
Q 13		IC			
		74HC174F		1	
Q 14		IC			
		74HC374F		1	
Q 15		IC			
		74HC138F		1	
Q 16	1381-20102	IC			
		μPA2003C		1	
Q 17	1381-20102	IC			
		μPA2003C		1	
Q 18	1219-31511	DIODE			
		A1S2836		1	
R 1		CERMET RESISTOR	1KΩ		
		RK73M2A102J	± 5%.1/10W	1	

Rev. No./Date | DESIGNED BY | APPROVED BY | Dep.

* : Selected at factory | DRAWING No. 44W87157 | 6/8

No.0073-1988.11

ANRITSU CORP.

Parts List of: A2-A8 3RD CONVERTER

Ref. No.	Part Code	Description	Rating	Qty	Note
R 2		METAL FILM RESISTOR			
		RS1FS221JL		1	
R 3		CERMET RESISTOR	330Ω		
		RK73M2A331J	± 5%.1/10W	1	
R 4		CERMET RESISTOR	180Ω		
		RK73M2A181J	± 5%.1/10W	1	
R 5		CERMET RESISTOR	100Ω		
		RK73M2A101J	± 5%.1/10W	1	
R 6		CERMET RESISTOR	470Ω		
		RK73M2A471J	± 5%.1/10W	1	
R 7		CERMET RESISTOR	150Ω		
		RK73M2A151J	± 5%.1/10W	1	
R 8		CERMET RESISTOR	1.2KΩ		
		RK73M2A122J	± 5%.1/10W	1	
R 9		METAL FILM RESISTOR	110Ω		
		RN73G2A111D	± 0.5%.1/10W	1	
R 10		CERMET RESISTOR	51Ω		
		RK73M2A510J	± 5%.1/10W	1	
R 11		CERMET RESISTOR	51Ω		
		RK73M2A510J	± 5%.1/10W	1	
R 12		CERMET RESISTOR	1KΩ		
		RK73M2A102J	± 5%.1/10W	1	
R 13		CERMET RESISTOR	220Ω		
		RK73M2A221J	± 5%.1/10W	1	
R 14		METAL FILM RESISTOR	43Ω		
		RN73G2A4300	± 0.5%.1/10W	1	
R 15		CERMET RESISTOR	51Ω		
		RK73M2A510J	± 5%.1/10W	1	
R 16		CERMET RESISTOR	10KΩ		
		RK73M2A103J	± 5%.1/10W	1	
R 17		NOT ASSIGNED			
R 18		CERMET RESISTOR	10KΩ		
		RK73M2A103J	± 5%.1/10W	1	
R 19		CERMET RESISTOR	1.8KΩ		
		RK73M2A182J	± 5%.1/10W	1	
R 20		CERMET RESISTOR	100Ω		
		RK73M2A101J	± 5%.1/10W	1	
R 21		CERMET RESISTOR	1KΩ		
		RK73M2A102J	± 5%.1/10W	1	
R 22		METAL FILM RESISTOR	270Ω		
		RN73G2A2710	± 0.5%.1/10W	1	
R 23		METAL FILM RESISTOR	270Ω		
		RN73G2A2710	± 0.5%.1/10W	1	
R 24		METAL FILM RESISTOR	15Ω		
		RN73G2A15R0	± 0.5%.1/10W	1	

Rev. No./Date | DESIGNED BY | APPROVED BY | Dep.

* : Selected at factory | DRAWING No. 44W87157 | 7/8

No.0073-1988.11

ANRITSU CORP.

Parts List of: A2-A8 3RD CONVERTER

Ref. No.	Part Code	Description	Rating	Qty	Note
R 25		NOT ASSIGNED			
R 26		NOT ASSIGNED			
R 27		NOT ASSIGNED			
R 28		CERMET RESISTOR	120Ω		
		RK73M2A121J	± 5%.1/10W	1	
R 29		CERMET RESISTOR	120Ω		
		RK73M2A121J	± 5%.1/10W	1	
R 30		CERMET RESISTOR	22Ω		
		RK73M2A220J	± 5%.1/10W	1	
X 1		XTAL OSC	40MHZ		
		3824A-BS020(40MHZ)		1	
Z 1		MIXER			
		M8		1	
Z 2	8053-90333	FILTER BPF			
		7K9-41MTC		1	
Z 3	8053-90333	FILTER BPF			
		7K9-41MTC		1	

Rev. No./Date | DESIGNED BY | APPROVED BY | Dep.

* : Selected at factory | DRAWING No. 44W87157 | 8/8

No.0073-1988.11

ANRITSU CORP.

Parts List of: ME4510B **16**
DMSA RX
A3 IF BPF & LOG AMP

Ref. No.	Part Code	Description	Rating	Qty	Note
C 1		AL ELECTLT CAP	47μ F		
		CE04C1E470A	± 20%,25V	1	
C 2		AL ELECTLT CAP	47μ F		
		CE04C1E470A	± 20%,25V	1	
C 3		AL ELECTLT CAP	100μ F		
		CE04C1A101A	± 20%,10V	1	
C 4		CER CAP	0.022μ F		
		CK733B1H223K	± 10%,50V	1	
C 5		CER CAP	0.022μ F		
		CK733B1H223K	± 10%,50V	1	
C 6		VAR CER CAP	11p F,100V		
		TZ03T110A		1	*
C 7		CER CAP	18p F		
		CC732CH1H180J	± 5%,50V	1	
C 8		CER CAP	18p F		
		CC732CH1H180J	± 5%,50V	1	
		CER CAP	2p F,50V		
		CC732CK1H020C	± 0.25p F	1	
C 9		VAR CER CAP	11p F,100V		
		TZ03T110A		1	*
C 10		CER CAP	18p F		
		CC732CH1H180J	± 5%,50V	1	
		CER CAP	2p F,50V		
		CC732CK1H020C	± 0.25p F	1	
C 11		CER CAP	18p F		
		CC732CH1H180J	± 5%,50V	1	
C 12		CER CAP	0.1μ F,50V		
		CK733F1H104Z	+80/-20%	1	
C 13		CER CAP	0.1μ F,50V		
		CK733F1H104Z	+80/-20%	1	
C 14		CER CAP	0.1μ F,50V		
		CK733F1H104Z	+80/-20%	1	
C 15		CER CAP	0.1μ F,50V		
		CK733F1H104Z	+80/-20%	1	
C 16		CER CAP	0.22μ F		
		CK737B1H224K	± 10%,50V	1	
C 17		VAR CER CAP	30p F,100V		
		TZ03R300A		1	*
C 18		VAR CER CAP	30p F,100V		
		TZ03R300A		1	*
C 19		CER CAP	0.22μ F		
		CK737B1H224K	± 10%,50V	1	
C 20		VAR CER CAP	30p F,100V		
		TZ03R300A		1	*
C 21		VAR CER CAP	11p F,100V		
		TZ03T110A		1	*

* Selected at factory

DRAWING No. 44W86743 -04 1/29

& TEXT 1993 07

ANRITSU CORP.

Ref. No.	Part Code	Description	Rating	Qty	Note
C 22		CER CAP	18p F		
		CC732CH1H180J	± 5%,50V	1	
C 23		CER CAP	18p F		
		CC732CH1H180J	± 5%,50V	1	
		CER CAP	2p F,50V		
		CC732CK1H020C	± 0.25p F	1	
C 24		CER CAP	0.1μ F,50V		
		CK733F1H104Z	+80/-20%	1	
C 25		CER CAP	0.022μ F		
		CK733B1H223K	± 10%,50V	1	
C 26		AL ELECTLT CAP	47μ F		
		CE04C1E470A	± 20%,25V	1	
C 27		AL ELECTLT CAP	47μ F		
		CE04C1E470A	± 20%,25V	1	
C 28		AL ELECTLT CAP	47μ F		
		CE04C1E470A	± 20%,25V	1	
C 29		NOT ASSIGN			
C 30		CER CAP	1000p F		
		CK732B1H102K	± 10%,50V	1	
C 31		AL ELECTLT CAP	33μ F		
		CE04C1V330A	± 20%,35V	1	
C 32		CER CAP	0.22μ F		
		CK737B1H224K	± 10%,50V	1	
C 33		CER CAP	0.22μ F		
		CK737B1H224K	± 10%,50V	1	
C 34		CER CAP	0.22μ F		
		CK737B1H224K	± 10%,50V	1	
C 35		CER CAP	0.22μ F		
		CK737B1H224K	± 10%,50V	1	
C 36		VAR CER CAP	11p F,100V		
		TZ03T110A		1	*
C 37		CER CAP	18p F		
		CC732CH1H180J	± 5%,50V	1	
C 38		CER CAP	18p F		
		CC732CH1H180J	± 5%,50V	1	
		CER CAP	2p F,50V		
		CC732CK1H020C	± 0.25p F	1	
C 39		AL ELECTLT CAP	33μ F		
		CE04C1V330A	± 20%,35V	1	
C 40		CER CAP	4700p F		
		CK732B1H472K	± 10%,50V	1	
C 41		CER CAP	45p F,100V		
		TZ03P450A		1	*
C 42		NOT ASSIGN			

* Selected at factory

DRAWING No. 44W86743 -04 2/29

& TEXT 1993 07

ANRITSU CORP.

Ref. No.	Part Code	Description	Rating	Qty	Note
C 43		NOT ASSIGN			
C 44		NOT ASSIGN			
C 45		CER CAP	0.022μ F		
		CK733B1H223K	± 10%,50V	1	
C 46		CER CAP	0.022μ F		
		CK733B1H223K	± 10%,50V	1	
C 47		AL ELECTLT CAP	47μ F		
		CE04C1E470A	± 20%,25V	1	
C 48		AL ELECTLT CAP	47μ F		
		CE04C1E470A	± 20%,25V	1	
C 49		AL ELECTLT CAP	47μ F		
		CE04C1E470A	± 20%,25V	1	
C 50		AL ELECTLT CAP	47μ F		
		CE04C1E470A	± 20%,25V	1	
C 51		AL ELECTLT CAP	47μ F		
		CE04C1E470A	± 20%,25V	1	
C 52		AL ELECTLT CAP	47μ F		
		CE04C1E470A	± 20%,25V	1	
C 53		AL ELECTLT CAP	47μ F		
		CE04C1E470A	± 20%,25V	1	
C 54		AL ELECTLT CAP	47μ F		
		CE04C1E470A	± 20%,25V	1	
C 55		AL ELECTLT CAP	47μ F		
		CE04C1E470A	± 20%,25V	1	
C 56		AL ELECTLT CAP	47μ F		
		CE04C1E470A	± 20%,25V	1	
C 57		AL ELECTLT CAP	47μ F		
		CE04C1E470A	± 20%,25V	1	
C 58		VAR CER CAP	45p F,100V		
		TZ03P450A		1	*
C 59		NOT ASSIGN			
C 60		AL ELECTLT CAP	47μ F		
		CE04C1E470A	± 20%,25V	1	
C 61		CER CAP	0.22μ F		
		CK737B1H224K	± 10%,50V	1	
C 62		CER CAP	0.22μ F		
		CK737B1H224K	± 10%,50V	1	
C 63		CER CAP	0.22μ F		
		CK737B1H224K	± 10%,50V	1	
C 64		CER CAP	0.22μ F		
		CK737B1H224K	± 10%,50V	1	
C 65		AL ELECTLT CAP	47μ F		
		CE04C1E470A	± 20%,25V	1	

* Selected at factory

DRAWING No. 44W86743 -04 3/29

& TEXT 1993 07

ANRITSU CORP.

Ref. No.	Part Code	Description	Rating	Qty	Note
C 66		CER CAP	0.22μ F		
		CK737B1H224K	± 10%,50V	1	
C 67		TA ELECTLT CAP	2.2μ F		
		CS732E1E225M	± 20%,25V	1	
C 68		CER CAP	0.1μ F,50V		
		CK733F1H104Z	+80/-20%	1	
C 69		NOT ASSIGN			
C 70		NOT ASSIGN			
C 71		NOT ASSIGN			
C 72		CER CAP	0.22μ F		
		CK737B1H224K	± 10%,50V	1	
C 73		CER CAP	0.22μ F		
		CK737B1H224K	± 10%,50V	1	
C 74		AL ELECTLT CAP	47μ F		
		CE04C1E470A	± 20%,25V	1	
C 75		CER CAP	0.22μ F		
		CK737B1H224K	± 10%,50V	1	
C 76		CER CAP	0.22μ F		
		CK737B1H224K	± 10%,50V	1	
C 77		CER CAP	0.22μ F		
		CK737B1H224K	± 10%,50V	1	
C 78		CER CAP	0.22μ F		
		CK737B1H224K	± 10%,50V	1	
C 79		CER CAP	0.22μ F		
		CK737B1H224K	± 10%,50V	1	
C 80		CER CAP	0.22μ F		
		CK737B1H224K	± 10%,50V	1	
C 81		CER CAP	0.22μ F		
		CK737B1H224K	± 10%,50V	1	
C 82		CER CAP	0.22μ F		
		CK737B1H224K	± 10%,50V	1	
C 83		CER CAP	0.22μ F		
		CK737B1H224K	± 10%,50V	1	
C 84		CER CAP	0.22μ F		
		CK737B1H224K	± 10%,50V	1	
C 85		AL ELECTLT CAP	47μ F		
		CE04C1E470A	± 20%,25V	1	
C 86		AL ELECTLT CAP	47μ F		
		CE04C1E470A	± 20%,25V	1	
C 87		AL ELECTLT CAP	47μ F		
		CE04C1E470A	± 20%,25V	1	
C 88		AL ELECTLT CAP	47μ F		
		CE04C1E470A	± 20%,25V	1	

* Selected at factory

DRAWING No. 44W86743 -04 4/29

& TEXT 1993 07

ANRITSU CORP.

Ref. No.	Part Code	Description	Rating	Qty	Note
C 89		VAR CER CAP	45p F,100V		
		TZ03P450A		1	*
C 90		NOT ASSIGN			
C 91		VAR CER CAP	45p F,100V		
		TZ03P450A		1	*
C 92		NOT ASSIGN			
C 93		NOT ASSIGN			
C 94		AL ELECTLT CAP	47μ F		
		CE04C1E470A	± 20%,25V	1	
C 95		CER CAP	120p F		
		CC732CH1H121J	± 5%,50V	1	
C 96		CER CAP	22p F		
		CC732CH1H220J	± 5%,50V	1	
C 97		CER CAP	150p F		
		CC732CH1H151J	± 5%,50V	1	
C 98		CER CAP	27p F		
		CC732CH1H270J	± 5%,50V	1	
C 99		CER CAP	68p F		
		CC732CH1H680J	± 5%,50V	1	
C 100		CER CAP	0.1μ F,50V		
		CK733F1H104Z	+80/-20%	1	
C 101		AL ELECTLT CAP	33μ F		
		CE04C1V330A	± 20%,35V	1	
C 102		CER CAP	0.1μ F,50V		
		CK733F1H104Z	+80/-20%	1	
C 103		CER CAP	0.1μ F,50V		
		CK733F1H104Z	+80/-20%	1	
C 104		AL ELECTLT CAP	100μ F		
		CE04C1A101A	± 20%,10V	1	
C 105		CER CAP	0.1μ F,50V		
		CK733F1H104Z	+80/-20%	1	
C 106		CER CAP	0.1μ F,50V		
		CK733F1H104Z	+80/-20%	1	
C 107		CER CAP	0.1μ F,50V		
		CK733F1H104Z	+80/-20%	1	
C 108		CER CAP	0.1μ F,50V		
		CK733F1H104Z	+80/-20%	1	
C 109		AL ELECTLT CAP	47μ F		
		CE04C1E470A	± 20%,25V	1	
C 110		NOT ASSIGN			
C 111		PLSTC FILM CAP	1μ F		
		ECQ-V1H105JW	± 5%,50V	1	

ANRITSU CORP.

Ref. No.	Part Code	Description	Rating	Qty	Note
C 112		NOT ASSIGN			
C 113		NOT ASSIGN			
C 114		CER CAP	0.01μ F		
		CK732B1H103K	± 10%,50V	1	
C 115		CER CAP	0.1μ F,50V		
		CK733F1H104Z	+80/-20%	1	
C 116		CER CAP	0.01μ F		
		CK732B1H103K	± 10%,50V	1	
C 117		AL ELECTLT CAP	47μ F		
		CE04C1E470A	± 20%,25V	1	
C 118		CER CAP	0.01μ F		
		CK732B1H103K	± 10%,50V	1	
C 119		AL ELECTLT CAP	47μ F		
		CE04C1E470A	± 20%,25V	1	
C 120		CER CAP	10p F,50V		
		CC732CH1H100D	± 0.5p F	1	
C 121		CER CAP	47p F		
		CC732CH1H470J	± 5%,50V	1	
C 122		AL ELECTLT CAP	47μ F		
		CE04C1E470A	± 20%,25V	1	
C 123		AL ELECTLT CAP	47μ F		
		CE04C1E470A	± 20%,25V	1	
C 124		CER CAP	470p F		
		CC732CH1H471J	± 5%,50V	1	
C 125		CER CAP	270p F		
		CC732CH1H271J	± 5%,50V	1	
C 126		CER CAP	5p F,50V		
		CC732CH1H050D	± 0.5p F	1	
C 127		AL ELECTLT CAP	47μ F		
		CE04C1E470A	± 20%,25V	1	
C 128		AL ELECTLT CAP	47μ F		
		CE04C1E470A	± 20%,25V	1	
C 129		CER CAP	11p F		
		CC924CH1H110J	± 5%,50V	1	
C 130		CER CAP	47p F		
		CC732CH1H470J	± 5%,50V	1	
C 131		CER CAP	150p F		
		CC732CH1H151J	± 5%,50V	1	
C 132		CER CAP	470p F		
		CC732CH1H471J	± 5%,50V	1	
C 133		PLSTC FILM CAP	1600p F		
		ECQ-P1162FZ	± 1%,100V	1	
C 134		PLSTC FILM CAP	5100p F		
		ECQ-P1512FZ	± 1%,100V	1	

ANRITSU CORP.

Ref. No.	Part Code	Description	Rating	Qty	Note
C 135		PLSTC FILM CAP	0.016μ F		
		ECQ-P1163FZ	± 1%,100V	1	
C 136		PLSTC FILM CAP	0.051μ F		
		ECQ-P1513FZ	± 1%,100V	1	
C 137		AL ELECTLT CAP	47μ F		
		CE04C1E470A	± 20%,25V	1	
C 138		AL ELECTLT CAP	47μ F		
		CE04C1E470A	± 20%,25V	1	
C 139		CER CAP	0.1μ F,50V		
		CK733F1H104Z	+80/-20%	1	
C 140		CER CAP	0.1μ F,50V		
		CK733F1H104Z	+80/-20%	1	
C 141		AL ELECTLT CAP	47μ F		
		CE04C1E470A	± 20%,25V	1	
C 142		AL ELECTLT CAP	47μ F		
		CE04C1E470A	± 20%,25V	1	
C 143		CER CAP	270p F		
		CC732CH1H271J	± 5%,50V	1	
C 144		NOT ASSIGN			
C 145		AL ELECTLT CAP	100μ F		
		CE04C1A101A	± 20%,10V	1	
C 146		CER CAP	0.1μ F,50V		
		CK733F1H104Z	+80/-20%	1	
C 147		NOT ASSIGN			
C 148		CER CAP	0.1μ F,50V		
		CK733F1H104Z	+80/-20%	1	
C 149		NOT ASSIGN			
C 150		CER CAP	0.1μ F,50V		
		CK733F1H104Z	+80/-20%	1	
C 151		NOT ASSIGN			
C 152		NOT ASSIGN			
C 153		AL ELECTLT CAP	100μ F		
		CE04C1E101A	± 20%,25V	1	
C 154		CER CAP	0.1μ F,50V		
		CK733F1H104Z	+80/-20%	1	
C 155		AL ELECTLT CAP	100μ F		
		CE04C1E101A	± 20%,25V	1	
C 156		CER CAP	0.1μ F,50V		
		CK733F1H104Z	+80/-20%	1	
C 157		NOT ASSIGN			

ANRITSU CORP.

Ref. No.	Part Code	Description	Rating	Qty	Note
C 158		CER CAP	0.1μ F,50V		
		CK733F1H104Z	+80/-20%	1	
C 159		CER CAP	0.1μ F,50V		
		CK733F1H104Z	+80/-20%	1	
C 160		CER CAP	0.1μ F,50V		
		CK733F1H104Z	+80/-20%	1	
C 161		NOT ASSIGN			
C 162		NOT ASSIGN			
C 163		NOT ASSIGN			
C 164		NOT ASSIGN			
C 165		NOT ASSIGN			
C 166		AL ELECTLT CAP	47μ F		
		CE04C1E470A	± 20%,25V	1	
C 167		NOT ASSIGN			
C 168		NOT ASSIGN			
C 169		NOT ASSIGN			
C 170		AL ELECTLT CAP	33μ F		
		CE04C1V330A	± 20%,35V	1	
C 171		AL ELECTLT CAP	33μ F		
		CE04C1V330A	± 20%,35V	1	
C 172		CER CAP	56p F		
		CC732CH1H560J	± 5%,50V	1	
C 173		VAR CER CAP	30p F,100V		
		TZ03R300A		1	*
C 174		NOT ASSIGN			
C 175		CER CAP	0.1μ F,50V		
		CK733F1H104Z	+80/-20%	1	
C 176		CER CAP	0.1μ F,50V		
		CK733F1H104Z	+80/-20%	1	
C 177		NOT ASSIGN			
C 178		NOT ASSIGN			
C 179		AL ELECTLT CAP	47μ F		
		CE04C1E470A	± 20%,25V	1	
C 180		CER CAP	0.1μ F,50V		
		CK733F1H104Z	+80/-20%		

ANRITSU CORP.

Ref. No.	Part Code	Description	Rating	Qty	Note
C 181		CER CAP	0.1μ F.50V		
		CK733F1H104Z	+80/-20%	1	
C 182		CER CAP	0.022μ F		
		CK733B1H223K	± 10%.50V	1	
C 183		CER CAP	0.022μ F		
		CK733B1H223K	± 10%.50V	1	
C 184		CER CAP	0.1μ F.50V		
		CK733F1H104Z	+80/-20%	1	
C 185		CER CAP	0.022μ F		
		CK733B1H223K	± 10%.50V	1	
C 186		CER CAP	0.022μ F		
		CK733B1H223K	± 10%.50V	1	
C 187		CER CAP	0.1μ F.50V		
		CK733F1H104Z	+80/-20%	1	
C 188		CER CAP	0.1μ F.50V		
		CK733F1H104Z	+80/-20%	1	
C 189		CER CAP	0.1μ F.50V		
		CK733F1H104Z	+80/-20%	1	
C 190		CER CAP	0.1μ F.50V		
		CK733F1H104Z	+80/-20%	1	
C 191		CER CAP	0.1μ F.50V		
		CK733F1H104Z	+80/-20%	1	
C 192		CER CAP	0.1μ F.50V		
		CK733F1H104Z	+80/-20%	1	
C 193		CER CAP	0.22μ F		
		CK737B1H224K	± 10%.50V	1	
C 194		TA ELECTLT CAP	2.2μ F		
		CS732E1E225M	± 20%.25V	1	
C 195		NOT ASSIGN			
C 196		CER CAP	0.022μ F		
		CK733B1H223K	± 10%.50V	1	
C 197		NOT ASSIGN			
C 198		NOT ASSIGN			
C 199		CER CAP	15p F		
		CC73ZCH1H150J	± 5%.50V	1	
C 200		CER CAP	0.1μ F.50V		
		CK733F1H104Z	+80/-20%	1	
C 201		CER CAP	0.1μ F.50V		
		CK733F1H104Z	+80/-20%	1	
C 202		AL ELECTLT CAP	100μ F		
		CE04C1E101A	± 20%.25V	1	
C 203		CER CAP	0.1μ F.50V		
		CK733F1H104Z	+80/-20%	1	

Ref. No./Date

*: Selected at factory

Drawing No. 44WR6743 -04 9/29

ANRITSU CORP.

Ref. No.	Part Code	Description	Rating	Qty	Note
C 204		AL ELECTLT CAP	100μ F		
		CE04C1E101A	± 20%.25V	1	
C 205		NOT ASSIGN			
C 206		CER CAP	0.1μ F.50V		
		CK733F1H104Z	+80/-20%	1	
C 207		NOT ASSIGN			
C 208		NOT ASSIGN			
C 209		NOT ASSIGN			
C 210		NOT ASSIGN			
C 211		NOT ASSIGN			
C 212		NOT ASSIGN			
C 213		CER CAP	0.1μ F.50V		
		CK733F1H104Z	+80/-20%	1	
C 214		CER CAP	0.1μ F.50V		
		CK733F1H104Z	+80/-20%	1	
C 215		NOT ASSIGN			
C 216		CER CAP	0.1μ F.50V		
		CK733F1H104Z	+80/-20%	1	
C 217		CER CAP	0.1μ F.50V		
		CK733F1H104Z	+80/-20%	1	
C 218		CER CAP	0.1μ F.50V		
		CK733F1H104Z	+80/-20%	1	
C 219		CER CAP	0.1μ F.50V		
		CK733F1H104Z	+80/-20%	1	
C 220		CER CAP	0.1μ F.50V		
		CK733F1H104Z	+80/-20%	1	
C 221		CER CAP	0.1μ F.50V		
		CK733F1H104Z	+80/-20%	1	
C 222		CER CAP	0.1μ F.50V		
		CK733F1H104Z	+80/-20%	1	
C 223		CER CAP	0.1μ F.50V		
		CK733F1H104Z	+80/-20%	1	
C 224		CER CAP	0.1μ F.50V		
		CK733F1H104Z	+80/-20%	1	
C 225		CER CAP	0.1μ F.50V		
		CK733F1H104Z	+80/-20%	1	
C 226		CER CAP	0.1μ F.50V		
		CK733F1H104Z	+80/-20%	1	

Ref. No./Date

*: Selected at factory

Drawing No. 44WR6743 -04 10/29

ANRITSU CORP.

Ref. No.	Part Code	Description	Rating	Qty	Note
C 227		CER CAP	0.1μ F.50V		
		CK733F1H104Z	+80/-20%	1	
J 1		PLUG	90P		
		DIN41612-90PB		1	
J 2		PLUG			
		27DP-R-PC-1		1	
J 3		PLUG			
		27DP-R-PC-1		1	
J 4					
		DF1-5S2.5R24-10B-1		1	
J 5					
		FFC2AMEP		1	
J 6					
		DIC-252		1	
J 7					
		FFC2AMEP		1	
J 8					
		DIC-252		1	
J 9					
		FFC2AMEP		1	
J 10					
		DIC-252		1	
J 11					
		FFC2AMEP		1	
J 12					
		DIC-252		1	
J 13					
		FFC2AMEP		1	
J 14					
		DIC-252		1	
K 1		NOT ASSIGN			
K 2		NOT ASSIGN			
K 3		NOT ASSIGN			
K 4		RELAY			
		TQ2-12V-3		1	
K 5		RELAY			
		TQ2-12V-3		1	

Ref. No./Date

Drawing No. 44WR6743 -04 11/29

ANRITSU CORP.

Ref. No.	Part Code	Description	Rating	Qty	Note
K 6		RELAY			
		TQ2-12V-3		1	
K 7		RELAY			
		TQ2-12V-3		1	
L 1		NOT ASSIGN			
L 2		INDUCTOR			
		33T18847		1	
L 3		INDUCTOR			
		33T18847		1	
L 4		INDUCTOR	220μ H.± 10%		
		NL453232-221K		1	
L 5		INDUCTOR	220μ H.± 10%		
		NL453232-221K		1	
L 6		INDUCTOR			
		33T18847		1	
L 7		INDUCTOR	220μ H.± 10%		
		NL453232-221K		1	
L 8		INDUCTOR			
		33T18847		1	
L 9		INDUCTOR	220μ H.± 10%		
		NL453232-221K		1	
L 10					
		FS0810-101K		1	
L 11					
		FS0810-151K		1	
L 12		NOT ASSIGN			
L 13		INDUCTOR			
		33T18846		1	
L 14		INDUCTOR	220μ H.± 10%		
		NL453232-221K		1	
L 15		NOT ASSIGN			
L 16		INDUCTOR			
		33T18846		1	
L 17		INDUCTOR	220μ H.± 10%		
		NL453232-221K		1	
L 18		NOT ASSIGN			
L 19		INDUCTOR	220μ H.± 10%		
		NL453232-221K		1	
L 20		NOT ASSIGN			

Ref. No./Date

Drawing No. 44WR6743 -04

ANRITSU CORP.

Ref. No.	Part Code	Description	Rating	Qty	Note
L 21		INDUCTOR	220μ H. ± 10%		
		NL453232-221K		1	
L 22		INDUCTOR	220μ H. ± 10%		
		NL453232-221K		1	
L 23		INDUCTOR	220μ H. ± 10%		
		NL453232-221K		1	
L 24		INDUCTOR	220μ H. ± 10%		
		NL453232-221K		1	
L 25		INDUCTOR			
		33T18846		1	
L 26		INDUCTOR	220μ H. ± 10%		
		NL453232-221K		1	
L 27		NOT ASSIGN			
L 28		INDUCTOR	220μ H. ± 10%		
		NL453232-221K		1	
L 29		INDUCTOR	100μ H. ± 10%		
		NL453232-101K		1	
L 30		INDUCTOR	1500μ H		
		FS1012-152K	± 10%	1	
L 31		INDUCTOR	10μ H. ± 10%		
		NL453232-100K		1	
L 32		INDUCTOR	220μ H. ± 10%		
		NL453232-221K		1	
L 33		INDUCTOR	220μ H. ± 10%		
		NL453232-221K		1	
L 34		INDUCTOR	390μ H		
		FS0810-391K	± 10%	1	
L 35		NOT ASSIGN			
L 36		INDUCTOR	22μ H. ± 10%		
		LF8-220K		1	
L 37		INDUCTOR	22μ H. ± 10%		
		LF8-220K		1	
L 38		INDUCTOR	390μ H		
		FS0810-391K	± 10%	1	
L 39		NOT ASSIGN			
L 40		NOT ASSIGN			
L 41		INDUCTOR	22μ H. ± 10%		
		LF8-220K		1	
L 42		INDUCTOR			
		33T18846		1	
L 43		INDUCTOR	220μ H. ± 10%		
		NL453232-221K		1	

* Selected at factory

DRAWING No. 44WR6743 -04 13/29

ANRITSU CORP.

Ref. No.	Part Code	Description	Rating	Qty	Note
L 44		INDUCTOR	220μ H. ± 10%		
		NL453232-221K		1	
L 45		INDUCTOR	22μ H. ± 10%		
		LF8-220K		1	
L 46		INDUCTOR	22μ H. ± 10%		
		LF8-220K		1	
L 47		INDUCTOR	220μ H. ± 10%		
		NL453232-221K		1	
L 48		INDUCTOR	220μ H. ± 10%		
		NL453232-221K		1	
L 49		INDUCTOR	220μ H. ± 10%		
		NL453232-221K		1	
L 50		INDUCTOR	220μ H. ± 10%		
		NL453232-221K		1	
L 51		INDUCTOR	220μ H. ± 10%		
		NL453232-221K		1	
L 52		INDUCTOR	220μ H. ± 10%		
		NL453232-221K		1	
L 53		INDUCTOR	220μ H. ± 10%		
		NL453232-221K		1	
L 54		NOT ASSIGN			
L 55		NOT ASSIGN			
L 56		INDUCTOR	470μ H. ± 10%		
		NL453232-471K		1	
L 57		INDUCTOR	470μ H. ± 10%		
		NL453232-471K		1	
L 58		INDUCTOR	470μ H. ± 10%		
		NL453232-471K		1	
L 59		INDUCTOR	470μ H. ± 10%		
		NL453232-471K		1	
L 60		INDUCTOR	470μ H. ± 10%		
		NL453232-471K		1	
L 61		INDUCTOR	470μ H. ± 10%		
		NL453232-471K		1	
L 62		INDUCTOR	470μ H. ± 10%		
		NL453232-471K		1	
L 63		INDUCTOR	470μ H. ± 10%		
		NL453232-471K		1	
L 64		INDUCTOR	470μ H. ± 10%		
		NL453232-471K		1	
L 65		INDUCTOR	470μ H. ± 10%		
		NL453232-471K		1	
L 66					
		FS0810-101K		1	

* Selected at factory

DRAWING No. 44WR6743 -04 14/29

ANRITSU CORP.

Ref. No.	Part Code	Description	Rating	Qty	Note
L 67					
		FS0810-101K		1	
L 68					
		FS0810-470K		1	
Q 1		IC			
		μ PC78L08J		1	
Q 2					
		NJM79L09A		1	
Q 3		IC			
		μ PC14305HF		1	
Q 4		NOT ASSIGN			
Q 5		ZENER DIODE			
		RD5.1MB2		1	
Q 6		DIODE			
		1S953		1	
Q 7		NOT ASSIGN			
Q 8					
		2SC3735		1	
Q 9					
		2SC1623		1	
Q 10		NOT ASSIGN			
Q 11		NOT ASSIGN			
Q 12		NOT ASSIGN			
Q 13		DIODE			
		1SS279		1	
Q 14		DIODE			
		1SS279		1	
Q 15		DIODE			
		1SS279		1	
Q 16		DIODE			
		1SS279		1	
Q 17		ZENER DIODE			
		RD5.1MB2		1	
Q 18		DIODE			
		1S953		1	
Q 19					
		2SC3735		1	
Q 20					
		2SC1623		1	

* Selected at factory

DRAWING No. 44WR6743 -04 15/29

ANRITSU CORP.

Ref. No.	Part Code	Description	Rating	Qty	Note
Q 21		NOT ASSIGN			
Q 22		NOT ASSIGN			
Q 23		DIODE			
		1S2837		1	
Q 24		DIODE			
		1S2835		1	
Q 25		DIODE			
		1S2837		1	
Q 26		DIODE			
		1S2835		1	
Q 27		DIODE			
		1S2837		1	
Q 28		DIODE			
		1S2835		1	
Q 29		DIODE			
		1S2835		1	
Q 30		DIODE			
		1S2837		1	
Q 31		NOT ASSIGN			
Q 32		DIODE			
		1SS279		1	
Q 33		DIODE			
		1SS279		1	
Q 34		DIODE			
		1SS279		1	
Q 35		DIODE			
		1SS279		1	
Q 36		DIODE			
		1SS279		1	
Q 37		DIODE			
		1SS279		1	
Q 38		DIODE			
		1SS279		1	
Q 39		DIODE			
		1SS279		1	
Q 40		DIODE			
		1SS279		1	
Q 41		DIODE			
		1SS279		1	
Q 42		DIODE			
		1SS279		1	
Q 43		DIODE			
		1SS279		1	

* Selected at factory

DRAWING No. 44WR6743 -04 16/29

ANRITSU CORP.

Ref. No.	Part Code	Description	Rating	Qty	Note
Q 44		DIODE			
		1SS279		1	
Q 45		DIODE			
		1SS279		1	
Q 46		DIODE			
		1SS279		1	
Q 47		DIODE			
		1SS279		1	
Q 48		NOT ASSIGN			
Q 49					
		LM833M		1	
Q 50					
		LH4001CN		1	
Q 51		NOT ASSIGN			
Q 52		NOT ASSIGN			
Q 53		NOT ASSIGN			
Q 54		NOT ASSIGN			
Q 55		NOT ASSIGN			
Q 56		DIODE			
		1S953		1	
Q 57		2SC1623		1	
Q 58		DIODE			
		1S953		1	
Q 59		NOT ASSIGN			
Q 60					
		2SC1623		1	
Q 61		2SA1462		1	
Q 62		2SC1623		1	
Q 63		NOT ASSIGN			
Q 64		NOT ASSIGN			
Q 65		TC4053BF		1	
Q 66		TRANSISTOR			
		2SC945		1	

* Selected at factory

DRAWING No. 44WR6743 -04 17/29

ANRITSU CORP.

Ref. No.	Part Code	Description	Rating	Qty	Note
Q 67		TRANSISTOR			
		2SC945		1	
Q 68		TRANSISTOR			
		2SC945		1	
Q 69		DIODE			
		1S1992		1	
Q 70		DIODE			
		1S1992		1	
Q 71		LM833M		1	
Q 72		NOT ASSIGN			
Q 73					
		TC4051BF		1	
Q 74		LM833M		1	
Q 75		TC4051BF		1	
Q 76		AD569AD		1	
Q 77					
		74HC174F		1	
Q 78		74LS138F		1	
Q 79		74HC574F		1	
Q 80		74HC574F		1	
Q 81		74HC574F		1	
Q 82		TD62706F		1	
Q 83		74HC174F		1	
Q 84		TD62706F		1	
Q 85		TD62706F		1	
Q 86		AD588AQ		1	
Q 87		NOT ASSIGN			
Q 88		NOT ASSIGN			
Q 89		74LS244F		1	

* Selected at factory

DRAWING No. 44WR6743 -04 18/29

ANRITSU CORP.

Ref. No.	Part Code	Description	Rating	Qty	Note
Q 90		74LS244F		1	
Q 91		NOT ASSIGN			
Q 92		DIODE			
		1SS279		1	
Q 93		74LS10F		1	
Q 94		TC4053BF		1	
Q 95		NOT ASSIGN			
Q 96		NOT ASSIGN			
Q 97		NOT ASSIGN			
Q 98		NOT ASSIGN			
Q 99		DIODE			
		1SS279		1	
Q 100		NOT ASSIGN			
Q 101		NOT ASSIGN			
Q 102		DIODE			
		1S2837		1	
Q 103		DIODE			
		1S2837		1	
Q 104		NJM79L12A		1	
Q 105		TD62706F		1	
R 1		CERMET RESISTOR	51Ω		
		RK73M2A510J	± 5%.1/10W	1	
R 2		CERMET RESISTOR	2.2k Ω		
		RK73M2A222J	± 5%.1/10W	1	
R 3		VARIABLE RESISTOR	1k Ω		
		RG04B102H	± 20%.1/4W	1	
R 4		VARIABLE RESISTOR	200Ω		
		RG04B201H	± 20%.1/4W	1	
R 5		CERMET RESISTOR	100Ω		
		RK73M2A101J	± 5%.1/10W	1	

* Selected at factory

DRAWING No. 44WR6743 -04 19/29

ANRITSU CORP.

Ref. No.	Part Code	Description	Rating	Qty	Note
R 6		CERMET RESISTOR	100Ω		
		RK73M2A101J	± 5%.1/10W	1	
R 7		CERMET RESISTOR	3.3k Ω		
		RK73M2A332J	± 5%.1/10W	1	
R 8		CERMET RESISTOR	3.3k Ω		
		RK73M2A332J	± 5%.1/10W	1	
R 9		CERMET RESISTOR	1k Ω		
		RK73M2A102J	± 5%.1/10W	1	
R 10		NOT ASSIGN			
R 11		CERMET RESISTOR	330k Ω		
		RK73M2A334J	± 5%.1/10W	1	
R 12		CERMET RESISTOR	220Ω		
		RK73M2A221J	± 5%.1/10W	1	
R 13		CERMET RESISTOR	330k Ω		
		RK73M2A334J	± 5%.1/10W	1	
R 14		CERMET RESISTOR	15k Ω		
		RK73M2A153J	± 5%.1/10W	1	
R 15		CERMET RESISTOR	1k Ω		
		RK73M2A102J	± 5%.1/10W	1	
R 16		CERMET RESISTOR	1.8k Ω		
		RK73M2A182J	± 5%.1/10W	1	
R 17		CERMET RESISTOR	470Ω		
		RK73M2A471J	± 5%.1/10W	1	
R 18		CERMET RESISTOR	1k Ω		
		RK73M2A102J	± 5%.1/10W	1	
R 19		CERMET RESISTOR	6.8k Ω		
		RK73M2A682J	± 5%.1/10W	1	
R 20		CERMET RESISTOR	47k Ω		
		RK73M2A473J	± 5%.1/10W	1	
R 21		METAL FILM RESISTOR	2.7k Ω		
		RN73G2A272D	± 0.5%.1/10W	1	
R 22		CERMET RESISTOR	100Ω		
		RK73M2A101J	± 5%.1/10W	1	
R 23		CERMET RESISTOR	100Ω		
		RK73M2A101J	± 5%.1/10W	1	
R 24		CERMET RESISTOR	1k Ω		
		RK73M2A102J	± 5%.1/10W	1	
R 25		CERMET RESISTOR	6.8k Ω		
		RK73M2A682J	± 5%.1/10W	1	
R 26		CERMET RESISTOR	47k Ω		
		RK73M2A473J	± 5%.1/10W	1	
R 27		NOT ASSIGN			
R 28		VARIABLE RESISTOR	5k Ω		
		RG04B502H	± 20%.1/4W	1	

* Selected at factory

DRAWING No. 44WR6743 -04 20/29

ANRITSU CORP.

Ref. No.	Part Code	Description	Rating	Qty	Note
R 29		VARIABLE RESISTOR	5k Ω		
		RG04B502H	± 20%,1/4W	1	•
R 30		VARIABLE RESISTOR	5k Ω		
		RG04B502H	± 20%,1/4W	1	•
R 31		CERMET RESISTOR	3.3k Ω		
		RK73M2A332J	± 5%,1/10W	1	
R 32		RES ARRAY	3.3k Ω		
		RRS-4-332JB	± 5%,1/8W	1	
R 33		RES ARRAY	3.3k Ω		
		RRS-4-332JB	± 5%,1/8W	1	
R 34		VARIABLE RESISTOR	10k Ω		
		RG04B103H	± 20%,1/4W	1	•
R 35		VARIABLE RESISTOR	5k Ω		
		RG04B502H	± 20%,1/4W	1	•
R 36		VARIABLE RESISTOR	5k Ω		
		RG04B502H	± 20%,1/4W	1	•
R 37		VARIABLE RESISTOR	5k Ω		
		RG04B502H	± 20%,1/4W	1	•
R 38		NOT ASSIGN			
R 39		NOT ASSIGN			
R 40		CERMET RESISTOR	1k Ω		
		RK73M2A102J	± 5%,1/10W	1	
R 41		CERMET RESISTOR	330k Ω		
		RK73M2A334J	± 5%,1/10W	1	
R 42		CERMET RESISTOR	330k Ω		
		RK73M2A334J	± 5%,1/10W	1	
R 43		CERMET RESISTOR	220Ω		
		RK73M2A221J	± 5%,1/10W	1	
R 44		CERMET RESISTOR	15k Ω		
		RK73M2A153J	± 5%,1/10W	1	
R 45		CERMET RESISTOR	1k Ω		
		RK73M2A102J	± 5%,1/10W	1	
R 46		CERMET RESISTOR	10k Ω		
		RK73M2A103J	± 5%,1/10W	1	
R 47		CERMET RESISTOR	1.8k Ω		
		RK73M2A182J	± 5%,1/10W	1	
R 48		CERMET RESISTOR	10k Ω		
		RK73M2A103J	± 5%,1/10W	1	
R 49		CERMET RESISTOR	100Ω		
		RK73M2A101J	± 5%,1/10W	1	
R 50		CERMET RESISTOR	470Ω		
		RK73M2A471J	± 5%,1/10W	1	
R 51		CERMET RESISTOR	470Ω		
		RK73M2A471J	± 5%,1/10W	1	

ANRITSU CORP.

Ref. No.	Part Code	Description	Rating	Qty	Note
R 52		CERMET RESISTOR	10k Ω		
		RK73M2A103J	± 5%,1/10W	1	
R 53		CERMET RESISTOR	2.2k Ω		
		RK73M2A222J	± 5%,1/10W	1	
R 54		CERMET RESISTOR	470Ω		
		RK73M2A471J	± 5%,1/10W	1	
R 55		CERMET RESISTOR	470Ω		
		RK73M2A471J	± 5%,1/10W	1	
R 56		CERMET RESISTOR	330Ω		
		RK73M2A331J	± 5%,1/10W	1	
R 57		CERMET RESISTOR	3.9k Ω		
		RK73M2A392J	± 5%,1/10W	1	
R 58		CERMET RESISTOR	10k Ω		
		RK73M2A103J	± 5%,1/10W	1	
R 59		CERMET RESISTOR	2.2k Ω		
		RK73M2A222J	± 5%,1/10W	1	
R 60		CERMET RESISTOR	2.2k Ω		
		RK73M2A222J	± 5%,1/10W	1	
R 61		CERMET RESISTOR	820Ω		
		RK73M2A821J	± 5%,1/10W	1	
R 62		CERMET RESISTOR	180Ω		
		RK73M2A181J	± 5%,1/10W	1	
R 63		NOT ASSIGN			
R 64		NOT ASSIGN			
R 65		CERMET RESISTOR	100Ω		
		RK73M2A101J	± 5%,1/10W	1	
R 66		CERMET RESISTOR	100Ω		
		RK73M2A101J	± 5%,1/10W	1	
R 67		NOT ASSIGN			
R 68		NOT ASSIGN			
R 69		NOT ASSIGN			
R 70		CERMET RESISTOR	820Ω		
		RK73M2A821J	± 5%,1/10W	1	
R 71		CERMET RESISTOR	3.3k Ω		
		RK73M2A332J	± 5%,1/10W	1	
R 72		VARIABLE RESISTOR	1k Ω		
		RG04B102H	± 20%,1/4W	1	
R 73		VARIABLE RESISTOR	500Ω		
		RG04B501H	± 20%,1/4W	1	
R 74		CERMET RESISTOR	3.3k Ω		
		RK73M2A332J	± 5%,1/10W	1	

ANRITSU CORP.

Ref. No.	Part Code	Description	Rating	Qty	Note
R 75		CERMET RESISTOR	3.3k Ω		
		RK73M2A332J	± 5%,1/10W	1	
R 76		NOT ASSIGN			
R 77		CERMET RESISTOR	1k Ω		
		RK73M2A102J	± 5%,1/10W	1	
R 78		CERMET RESISTOR	1k Ω		
		RK73M2A102J	± 5%,1/10W	1	
R 79		NOT ASSIGN			
R 80		NOT ASSIGN			
R 81		CERMET RESISTOR	100Ω		
		RK73M2A101J	± 5%,1/10W	1	
R 82		CERMET RESISTOR	100Ω		
		RK73M2A101J	± 5%,1/10W	1	
R 83		METAL FILM RESISTOR	3.3k Ω		
		RN73G2A332D	± 0.5%,1/10W	1	
R 84		METAL FILM RESISTOR	8.2k Ω		
		RN73G2A822D	± 0.5%,1/10W	1	
R 85		VARIABLE RESISTOR	1k Ω		
		RG04B102H	± 20%,1/4W	1	
R 86		VARIABLE RESISTOR	500Ω		
		RG04B501H	± 20%,1/4W	1	
R 87		METAL FILM RESISTOR	2.2k Ω		
		RN73G2A222D	± 0.5%,1/10W	1	
R 88		VARIABLE RESISTOR	500Ω		
		RG04B501H	± 20%,1/4W	1	
R 89		METAL FILM RESISTOR	1.3k Ω		
		RN73G2A132D	± 0.5%,1/10W	1	
R 90		VARIABLE RESISTOR	200Ω		
		RG04B201H	± 20%,1/4W	1	
R 91		METAL FILM RESISTOR	820Ω		
		RN73G2A821D	± 0.5%,1/10W	1	
R 92		METAL FILM RESISTOR	680Ω		
		RN73G2A681D	± 0.5%,1/10W	1	
R 93		VARIABLE RESISTOR	50Ω		
		RG04B500H	± 20%,1/4W	1	
R 94		NOT ASSIGN			
R 95		RES ARRAY	3.3k Ω		
		RRS-4-332JB	± 5%,1/8W	1	
R 96		RES ARRAY	3.3k Ω		
		RRS-4-332JB	± 5%,1/8W	1	
R 97		RES ARRAY	3.3k Ω		
		RRS-4-332JB	± 5%,1/8W	1	

ANRITSU CORP.

Ref. No.	Part Code	Description	Rating	Qty	Note
R 98		NOT ASSIGN			
R 99		THERMISTOR			
		0SDS-300-1		1	
R 100		CERMET RESISTOR	1k Ω		
		RK73M2A102J	± 5%,1/10W	1	
R 101		VARIABLE RESISTOR	2k Ω		
		RG04B202H	± 20%,1/4W	1	•
R 102		POSISTOR			
		PTH60U331M		1	
R 103		VARIABLE RESISTOR	2k Ω		
		RG04B202H	± 20%,1/4W	1	•
R 104		NOT ASSIGN			
R 105		CERMET RESISTOR	2.2k Ω		
		RK73M2A222J	± 5%,1/10W	1	
R 106		CERMET RESISTOR	10k Ω		
		RK73M2A103J	± 5%,1/10W	1	
R 107		CERMET RESISTOR	2.2k Ω		
		RK73M2A222J	± 5%,1/10W	1	
R 108		NOT ASSIGN			
R 109		NOT ASSIGN			
R 110		CERMET RESISTOR	4.7k Ω		
		RK73M2A472J	± 5%,1/10W	1	
R 111		CERMET RESISTOR	4.7k Ω		
		RK73M2A472J	± 5%,1/10W	1	
R 112		CERMET RESISTOR	1.5k Ω		
		RK73M2A152J	± 5%,1/10W	1	
R 113		CERMET RESISTOR	560Ω		
		RK73M2A561J	± 5%,1/10W	1	
R 114		CERMET RESISTOR	330Ω		
		RK73M2A331J	± 5%,1/10W	1	
R 115		CERMET RESISTOR	270Ω		
		RK73M2A271J	± 5%,1/10W	1	
R 116		CERMET RESISTOR	100Ω		
		RK73M2A101J	± 5%,1/10W	1	
R 117		CERMET RESISTOR	150Ω		
		RK73M2A151J	± 5%,1/10W	1	
R 118		NOT ASSIGN			
R 119		NOT ASSIGN			
R 120		CERMET RESISTOR	2.2k Ω		
		RK73M2A222J	± 5%,1/10W	1	

ANRITSU CORP.

Ref. No.	Part Code	Description	Rating	Qty	Note
R 121		CERMET RESISTOR	6.8k Ω		
		RK73M2A682J	± 5%.1/10W	1	
R 122		CERMET RESISTOR	2.2k Ω		
		RK73M2A222J	± 5%.1/10W	1	
R 123		CERMET RESISTOR	1.8k Ω		
		RK73M2A182J	± 5%.1/10W	1	
R 124		CERMET RESISTOR	3.9k Ω		
		RK73M2A392J	± 5%.1/10W	1	
R 125		RS1FS102JL		1	
R 126		CERMET RESISTOR	8.2k Ω		
		RK73M2A822J	± 5%.1/10W	1	
R 127		CERMET RESISTOR	4.7k Ω		
		RK73M2A472J	± 5%.1/10W	1	
R 128		CERMET RESISTOR	470Ω		
		RK73M2A471J	± 5%.1/10W	1	
R 129		CERMET RESISTOR	470Ω		
		RK73M2A471J	± 5%.1/10W	1	
R 130		CERMET RESISTOR	180Ω		
		RK73M2A181J	± 5%.1/10W	1	
R 131		CERMET RESISTOR	4.7k Ω		
		RK73M2A472J	± 5%.1/10W	1	
R 132		CERMET RESISTOR	4.7k Ω		
		RK73M2A472J	± 5%.1/10W	1	
R 133		CERMET RESISTOR	10k Ω		
		RK73M2A103J	± 5%.1/10W	1	
R 134		METAL FILM RESISTOR	7.5k Ω		
		RN73G2A752D	± 0.5%.1/10W	1	
R 135		CERMET RESISTOR	1k Ω		
		RK73M2A102J	± 5%.1/10W	1	
R 136		VARIABLE RESISTOR	2k Ω		
		RG04B202H	± 20%.1/4W	1	•
R 137		NOT ASSIGN			
R 138		NOT ASSIGN			
R 139		NOT ASSIGN			
R 140		VARIABLE RESISTOR	5k Ω		
		RG04B502H	± 20%.1/4W	1	•
R 141		VARIABLE RESISTOR	5k Ω		
		RG04B502H	± 20%.1/4W	1	•
R 142		VARIABLE RESISTOR	50k Ω		
		RG04B503H	± 20%.1/4W	1	•
R 143		CERMET RESISTOR	75k Ω		
		RK73M2A753J	± 5%.1/10W	1	•

Rev. No./Date

• Selected at factory

DRAWING No. 44MB6743 -04 25/29

© TCSI 1993.07

ANRITSU CORP.

Ref. No.	Part Code	Description	Rating	Qty	Note
R 144		CERMET RESISTOR	22k Ω		
		RK73M2A223J	± 5%.1/10W	1	
R 145		CERMET RESISTOR	15k Ω		
		RK73M2A153J	± 5%.1/10W	1	
R 146		CERMET RESISTOR	100k Ω		
		RK73M2A104J	± 5%.1/10W	1	
R 147		CERMET RESISTOR	22k Ω		
		RK73M2A223J	± 5%.1/10W	1	
R 148		CERMET RESISTOR	150k Ω		
		RK73M2A154J	± 5%.1/10W	1	
R 149		METAL FILM RESISTOR	20k Ω		
		RN73G2A203D	± 0.5%.1/10W	1	
R 150		CERMET RESISTOR	1k Ω		
		RK73M2A102J	± 5%.1/10W	1	
R 151		NOT ASSIGN			
R 152		NOT ASSIGN			
R 153		NOT ASSIGN			
R 154		NOT ASSIGN			
R 155		CERMET RESISTOR	10k Ω		
		RK73M2A103J	± 5%.1/10W	1	
R 156		CERMET RESISTOR	100k Ω		
		RK73M2A104J	± 5%.1/10W	1	
R 157		METAL FILM RESISTOR	1k Ω		
		RN73G2A102D	± 0.5%.1/10W	1	•
R 158		CERMET RESISTOR	470Ω		
		RK73M2A471J	± 5%.1/10W	1	
R 159		NOT ASSIGN			
R 160		METAL FILM RESISTOR	10k Ω		
		RN73G2A103D	± 0.5%.1/10W	1	
R 161		CERMET RESISTOR	10k Ω		
		RK73M2A103J	± 5%.1/10W	1	
R 162		CERMET RESISTOR	10k Ω		
		RK73M2A103J	± 5%.1/10W	1	
R 163		CERMET RESISTOR	1k Ω		
		RK73M2A102J	± 5%.1/10W	1	
R 164		NOT ASSIGN			
R 165		METAL FILM RESISTOR	100k Ω		
		RN73G2A104D	± 0.5%.1/10W	1	
R 166		METAL FILM RESISTOR	100k Ω		
		RN73G2A104D	± 0.5%.1/10W	1	

Rev. No./Date

• Selected at factory

DRAWING No. 44MB6743 -04 26/29

© TCSI 1993.07

ANRITSU CORP.

Ref. No.	Part Code	Description	Rating	Qty	Note
R 167		METAL FILM RESISTOR	100k Ω		
		RN73G2A473D	± 0.5%.1/10W	1	
R 168		METAL FILM RESISTOR	3k Ω		
		RN73G2A302D	± 0.5%.1/10W	1	
R 169		METAL FILM RESISTOR	20k Ω		
		RN73G2A203D	± 0.5%.1/10W	1	
R 170		METAL FILM RESISTOR	10k Ω		
		RN73G2A103D	± 0.5%.1/10W	1	
R 171		METAL FILM RESISTOR	4.7k Ω		
		RN73G2A472D	± 0.5%.1/10W	1	
R 172		METAL FILM RESISTOR	2k Ω		
		RN73G2A202D	± 0.5%.1/10W	1	
R 173		METAL FILM RESISTOR	910Ω		
		RN73G2A911D	± 0.5%.1/10W	1	
R 174		METAL FILM RESISTOR	18Ω		
		RN73G2A180D	± 0.5%.1/10W	1	
R 175		METAL FILM RESISTOR	1.2k Ω		
		RN73G2A122D	± 0.5%.1/10W	1	
R 176		VARIABLE RESISTOR	2k Ω		
		RG04B202H	± 20%.1/4W	1	
R 177		METAL FILM RESISTOR	4.7k Ω		
		RN73G2A472D	± 0.5%.1/10W	1	
R 178		METAL FILM RESISTOR	3k Ω		
		RN73G2A302D	± 0.5%.1/10W	1	
R 179		VARIABLE RESISTOR	500Ω		
		RG04B501H	± 20%.1/4W	1	
R 180		METAL FILM RESISTOR	1.5k Ω		
		RN73G2A152D	± 0.5%.1/10W	1	
R 181		VARIABLE RESISTOR	200Ω		
		RG04B201H	± 20%.1/4W	1	
R 182		METAL FILM RESISTOR	1k Ω		
		RN73G2A102D	± 0.5%.1/10W	1	
R 183		VARIABLE RESISTOR	200Ω		
		RG04B201H	± 20%.1/4W	1	
R 184		VARIABLE RESISTOR	100Ω		
		RG04B101H	± 20%.1/4W	1	
R 185		METAL FILM RESISTOR	620Ω		
		RN73G2A621D	± 0.5%.1/10W	1	
R 186		NOT ASSIGN			
R 187		NOT ASSIGN			
R 188		NOT ASSIGN			
R 189		NOT ASSIGN			

Rev. No./Date

• Selected at factory

DRAWING No. 44MB6743 -04 27/29

© TCSI 1993.07

ANRITSU CORP.

Ref. No.	Part Code	Description	Rating	Qty	Note
R 190		METAL FILM RESISTOR	100k Ω		
		RN73G2A104D	± 0.5%.1/10W	1	
R 191		NOT ASSIGN			
R 192		NOT ASSIGN			
R 193		NOT ASSIGN			
R 194		METAL FILM RESISTOR	270Ω		
		RN73G2A271D	± 0.5%.1/10W	1	
R 195		METAL FILM RESISTOR	43Ω		
		RN73G2A430D	± 0.5%.1/10W	1	
R 196		NOT ASSIGN			
R 197		RES ARRAY	100k Ω		
		RRS-6-104JA	± 5%.1/8W	1	
R 198		RES ARRAY	100k Ω		
		RRS-6-104JA	± 5%.1/8W	1	
R 199		RES ARRAY	100k Ω		
		RRS-6-104JA	± 5%.1/8W	1	
R 200		RES ARRAY	100k Ω		
		RRS-6-104JA	± 5%.1/8W	1	
R 201		RES ARRAY	330Ω		
		RRS-7-331JA	± 5%.1/8W	1	
X 1		QUARTZ CRYSTAL			
		34X69276		1	
X 2		QUARTZ CRYSTAL			
		34X69276		1	
X 3		QUARTZ CRYSTAL			
		34X69276		1	
X 4		QUARTZ CRYSTAL			
		34X69276		1	
Z 1		UH9		1	
Z 2		UH10		1	
Z 3		UH10		1	
Z 4		UH10		1	
Z 5		UH9		1	

Rev. No./Date

• Selected at factory

DRAWING No. 44MB6743 -04 28/29

© TCSI 1993.07

ANRITSU CORP.

Parts List of: A3-A2 LOG AMP-2 17

Ref. No.	Part Code	Description	Rating	Qty	Note
Z 6		UH10		1	
Z 7		UH11		1	
Z 8		NOT ASSIGN			
Z 9					
Z 10		UH11		1	
		UH9		1	
Z 11					
Z 12		UH9		1	
Z 13		NOT ASSIGN			
Z 14		NOT ASSIGN			
Z 15		UH11		1	
		UH11		1	
Z 16					
Z 17		MT06		1	
Z 18		MT07(A)		1	
Z 19		MT07(B)		1	
		MT07(D)		1	

Ref. No.	Part Code	Description	Rating	Qty	Note
C 1		CER CAP	4700p F		
		CK73Z81H472K (S 3	± 10%.50V	1	
C 2		CER CAP	4700p F		
		CK73Z81H472K (S 3	± 10%.50V	1	
C 3		CER CAP	0.1μ F.50V		
		CK733F1H104Z (A 5	+80/-20%	1	
C 4		CER CAP	0.1μ F.50V		
C 5		CK733F1H104Z (A 5	+80/-20%	1	
		NOT ASSIGNED			
C 6		NOT ASSIGNED			
C 7		CER CAP	0.1μ F.50V		
		CK733F1H104Z (A 5	+80/-20%	1	
C 8		CER CAP	0.1μ F.50V		
		CK733F1H104Z (A 5	+80/-20%	1	
C 9		CER CAP	0.1μ F.50V		
		CK733F1H104Z (A 5	+80/-20%	1	
C 10		CER CAP	0.1μ F.50V		
		CK733F1H104Z (A 5	+80/-20%	1	
J 1		PLUG	5P		
		DF1-5P2.50S		1	
Q 1		IC			
		LT1001CS8		1	
Q 2		IC			
		LT1013DS8		1	
Q 3		IC			
		LT1013DS8		1	
Q 4		TR.TWIN			
		μPA39A		1	
R 1		METAL FILM RESISTOR	1KΩ		
		RN73G2A1022D	± 0.5%.1/10W	1	
R 2		METAL FILM RESISTOR	1KΩ		
		RN73G2A1022D	± 0.5%.1/10W	1	
R 3		METAL FILM RESISTOR	7.5KΩ		
		RN73G2A752D	± 0.5%.1/10W	1	
R 4		CERMET RESISTOR	1MΩ		
		RK73M2A105J	± 5%.1/10W	1	
R 5		VARIABLE RESISTOR	100KΩ		
		RG0481104M	1/4W	1	±

Selected at factory — DRAWING No. 44W88743 -04 — 29/29

ANRITSU CORP.

Parts List of: A3-A2 LOG AMP-2

Ref. No.	Part Code	Description	Rating	Qty	Note
R 6		METAL FILM RESISTOR	10KΩ		
		RN73G2A1033D	± 0.5%.1/10W	1	
R 7		METAL FILM RESISTOR	10KΩ		
		RN73G2A1033D	± 0.5%.1/10W	1	
R 8		VARIABLE RESISTOR	5KΩ		
		RG0485021M	1/4W	1	±
R 9		NOT ASSIGNED			
R 10		THERMISTOR			±SHORT
		LP1/16 102J TCR302		1	
R 11		METAL FILM RESISTOR	1KΩ		
		RN73G2A1022D	± 0.5%.1/10W	1	
R 12		VARIABLE RESISTOR	100KΩ		
		RG0481104M	1/4W	1	±
R 13		METAL FILM RESISTOR	100KΩ		
		RN73G2A1043D	± 0.5%.1/10W	1	
R 14		CERMET RESISTOR	150KΩ		
		RK73M2A154J	± 5%.1/10W	1	
R 15		METAL FILM RESISTOR	10KΩ		
		RN73G2A1033D	± 0.5%.1/10W	1	
R 16		METAL FILM RESISTOR	5.1KΩ		
		RN73G2A512D	± 0.5%.1/10W	1	
R 17		METAL FILM RESISTOR	10KΩ		
		RN73G2A1033D	± 0.5%.1/10W	1	
R 18		METAL FILM RESISTOR	30KΩ		
		RN73G2A303D	± 0.5%.1/10W	1	
R 19		METAL FILM RESISTOR	100KΩ		
		RN73G2A1043D	± 0.5%.1/10W	1	
R 20		METAL FILM RESISTOR	10KΩ		
		RN73G2A1033D	± 0.5%.1/10W	1	
R 21		METAL FILM RESISTOR	5.1KΩ		
		RN73G2A512D	± 0.5%.1/10W	1	
R 22		METAL FILM RESISTOR	10KΩ		
		RN73G2A1033D	± 0.5%.1/10W	1	

Selected at factory — DRAWING No. 44W88743 -04 — 2/2

ANRITSU CORP.

Parts List of: ME4510B 18
DMSA RX
A4 DELAY & PHASE DETECTOR

Ref. No.	Part Code	Description	Rating	Qty	Note
C 1		CER CAP	0.01μ F		
		CK732B1H103K	± 10%.50V	1	
C 2		CER CAP	0.1μ F.50V		
		CK733F1H104Z	+80/-20%	1	
C 3		CER CAP	0.1μ F.50V		
		CK733F1H104Z	+80/-20%	1	
C 4		NOT ASSIGN			
C 5		CER CAP	0.01μ F		
		CK732B1H103K	± 10%.50V	1	
C 6		NOT ASSIGN			
C 7		CER CAP	3p F.50V		
		CC732CJ1H030C	± 0.25p F	1	
C 8		CER CAP	0.01μ F		
		CK732B1H103K	± 10%.50V	1	
C 9		NOT ASSIGN			
C 10		CER CAP	0.1μ F.50V		
		CK733F1H104Z	+80/-20%	1	
C 11		CER CAP	0.1μ F.50V		
		CK733F1H104Z	+80/-20%	1	
C 12		CER CAP	0.1μ F.50V		
		CK733F1H104Z	+80/-20%	1	
C 13		CER CAP	0.01μ F		
		CK732B1H103K	± 20%.50V	1	
C 14		CER CAP	0.1μ F.50V		
		CK733F1H104Z	+80/-20%	1	
C 15		CER CAP	0.1μ F.50V		
		CK733F1H104Z	+80/-20%	1	
C 16		CER CAP	0.1μ F.50V		
		CK733F1H104Z	+80/-20%	1	
C 17		CER CAP	0.01μ F		
		CK732B1H103K	± 10%.50V	1	
C 18		CER CAP	0.1μ F.50V		
		CK733F1H104Z	+80/-20%	1	
C 19		CER CAP	0.1μ F.50V		
		CK733F1H104Z	+80/-20%	1	
C 20		CER CAP	0.1μ F.50V		
		CK733F1H104Z	+80/-20%	1	
C 21		CER CAP	0.01μ F		
		CK732B1H103K	± 10%.50V	1	
C 22		CER CAP	0.1μ F.50V		
		CK733F1H104Z	+80/-20%	1	
C 23		CER CAP	0.1μ F.50V		
		CK733F1H104Z	+80/-20%	1	

Selected at factory — DRAWING No. 44W88744 -07 — 1/28

ANRITSU CORP.

Ref. No.	Part Code	Description	Rating	Qty	Note
C 24		CER CAP	0.1μ F.50V		
		CK733F1H104Z	+80/-20%	1	
C 25		NOT ASSIGN			
C 26		CER CAP	0.1μ F.50V		
		CK733F1H104Z	+80/-20%	1	
C 27		CER CAP	0.1μ F.50V		
		CK733F1H104Z	+80/-20%	1	
C 28		CER CAP	0.1μ F.50V		
		CK733F1H104Z	+80/-20%	1	
C 29		CER CAP	0.1μ F.50V		
		CK733F1H104Z	+80/-20%	1	
C 30		CER CAP	0.1μ F.50V		
		CK733F1H104Z	+80/-20%	1	
C 31		CER CAP	0.1μ F.50V		
		CK733F1H104Z	+80/-20%	1	
C 32		CER CAP	0.1μ F.50V		
		CK733F1H104Z	+80/-20%	1	
C 33		CER CAP	0.1μ F.50V		
		CK733F1H104Z	+80/-20%	1	
C 34		AL ELECTLT CAP	100μ F		
		CE04C1A101A	± 20%.10V	1	
C 35		CER CAP			
		CC732CH1H102J		1	
C 36		CER CAP	0.1μ F.50V		
		CK733F1H104Z	+80/-20%	1	
C 37		CER CAP	0.1μ F.50V		
		CK733F1H104Z	+80/-20%	1	
C 38		CER CAP	0.01μ F		
		CK732B1H103K	± 10%.50V	1	
C 39		CER CAP	0.1μ F.50V		
		CK733F1H104Z	+80/-20%	1	
C 40		CER CAP	0.01μ F		
		CK732B1H103K	± 10%.50V	1	
C 41		CER CAP	3p F.50V		
		CC732CJ1H030C	± 0.25p F	1	
C 42		CER CAP	47p F		
		CC732CH1H470J	± 5%.50V	1	
C 43		VAR CER CAP	3-11p F		
		TZ03T110A		1	•
C 44		CER CAP	0.1μ F.50V		
		CK733F1H104Z	+80/-20%	1	
C 45		NOT ASSIGN			
C 46		NOT ASSIGN			

• : Selected at factory

DRAWING No. 44MB6744 -07 2/28

ANRITSU CORP.

Ref. No.	Part Code	Description	Rating	Qty	Note
C 47		CER CAP	0.1μ F		
		CK924C1H104M	± 20%.50V	1	
C 48		CER CAP	1p F.50V		
		CC732CK1H010C	± 0.25p F	1	
C 49		CER CAP	3.3μ F		
		CS732E1C335M	± 20%.16V	1	
C 50		CER CAP	0.1μ F		
		CK924C1H104M	± 20%.50V	1	
C 51		CER CAP	0.1μ F.50V		
		CK733F1H104Z	+80/-20%	1	
C 52		CER CAP	0.1μ F.50V		
		CK733F1H104Z	+80/-20%	1	
C 53		CER CAP	22p F		
		CC732CH1H220J	± 5%.50V	1	
C 54		CER CAP	6p F.50V		
		CC732CH1H060D	± 0.5p F	1	
C 55		CER CAP	22p F		
		CC732CH1H220J	± 5%.50V	1	
C 56		PLSTC FILM CAP	5600p F		
		ECQ-P1562FZ	± 1%.100V	1	
C 57		PLSTC FILM CAP	1500p F		
		ECQ-P1152FZ	± 1%.100V	1	
C 58		CER CAP	0.01μ F		
		CK924C1H103M	± 20%.50V	1	
C 59		CER CAP	0.01μ F		
		CK732B1H103K	± 10%.50V	1	
C 60		CER CAP	2200p F		
		CK924C1H222M	± 20%.50V	1	
C 61		CER CAP	560p F		
		CC733CH1H561J	± 5%.50V	1	
C 62		PLSTC FILM CAP	3300p F		
		ECQ-P1332FZ	± 1%.100V	1	
C 63		CER CAP	0.01μ F		
		CK732B1H103K	± 10%.50V	1	
C 64		CER CAP	1000p F		
		CC732CH1H102J	± 10%.50V	1	
C 65		CER CAP	270p F		
		CC732CH1H271J	± 5%.50V	1	
C 66		CER CAP	1000p F		
		CC732CH1H102J	± 10%.50V	1	
C 67		CER CAP	0.01μ F		
		CK732B1H103K	± 10%.50V	1	
C 68		CER CAP	0.1μ F.50V		
		CK733F1H104Z	+80/-20%	1	
C 69		CER CAP	0.1μ F.50V		
		CK733F1H104Z	+80/-20%	1	

• : Selected at factory

DRAWING No. 44MB6744 -07 3/28

ANRITSU CORP.

Ref. No.	Part Code	Description	Rating	Qty	Note
C 70		TA ELECTLT CAP	6.8μ F		
		CS732E0J685M	± 20%.6.3V	1	
C 71		TA ELECTLT CAP	6.8μ F		
		CS732E0J685M	± 20%.6.3V	1	
C 72		PLSTC FILM CAP	5600p F		
		ECQ-P1562FZ	± 1%.100V	1	
C 73		PLSTC FILM CAP	1500p F		
		ECQ-P1152FZ	± 1%.100V	1	
C 74		CER CAP	0.01μ F		
		CK924C1H103M	± 20%.50V	1	
C 75		CER CAP	2200p F		
		CK924C1H222M	± 20%.50V	1	
C 76		CER CAP	560p F		
		CC733CH1H561J	± 5%.50V	1	
C 77		PLSTC FILM CAP	3300p F		
		ECQ-P1332FZ	± 1%.100V	1	
C 78		CER CAP	1000p F		
		CC732CH1H102J	± 10%.50V	1	
C 79		CER CAP	270p F		
		CC732CH1H271J	± 5%.50V	1	
C 80		CER CAP	1000p F		
		CC732CH1H102J	± 10%.50V	1	
C 81		CER CAP	6.8μ F		
		CS732E0J685M	± 20%.6.3V	1	
C 82		CER CAP	6.8μ F		
		CS732E0J685M	± 20%.6.3V	1	
C 83		CER CAP	0.1μ F		
		CK924C1H104M	± 20%.50V	1	
C 84		CER CAP	0.1μ F		
		CK924C1H104M	± 20%.50V	1	
C 85		CER CAP	0.1μ F		
		CK924C1H104M	± 20%.50V	1	
C 86		CER CAP	33p F		
		CC732CH1H330J	± 5%.50V	1	
C 87		CER CAP	33p F		
		CC732CH1H330J	± 5%.50V	1	
C 88		CER CAP	0.1μ F.50V		
		CK733F1H104Z	+80/-20%	1	
C 89		CER CAP	0.01μ F		
		CK732B1H103K	± 10%.50V	1	
C 90		CER CAP	15000p F		
		CK732B1H153K	± 10%.50V	1	
C 91		CER CAP	0.022μ F		
		CK732B1H223K	± 10%.50V	1	
C 92		CER CAP	15000p F		
		CK732B1H153K	± 10%.50V	1	

• : Selected at factory

DRAWING No. 44MB6744 -07 4/28

ANRITSU CORP.

Ref. No.	Part Code	Description	Rating	Qty	Note
C 93		CER CAP	330p F		
		CC732CH1H331J	± 5%.50V	1	
C 94		CER CAP	330p F		
		CC732CH1H331J	± 5%.50V	1	
C 95		TA ELECTLT CAP	6.8μ F		
		CS732E0J685M	± 20%.6.3V	1	
C 96		TA ELECTLT CAP	6.8μ F		
		CS732E0J685M	± 20%.6.3V	1	
C 97		AL ELECTLT CAP	100μ F		
		CE04C1A101A	± 20%.10V	1	
C 98		CER CAP	0.1μ F.50V		
		CK733F1H104Z	+80/-20%	1	
C 99		AL ELECTLT CAP	100μ F		
		CE04C1A101A	± 20%.10V	1	
C 100		CER CAP	0.01μ F		
		CK732B1H103K	± 10%.50V	1	
C 101		CER CAP	0.01μ F		
		CK732B1H103K	± 10%.50V	1	
C 102		CER CAP	0.01μ F		
		CK732B1H103K	± 10%.50V	1	
C 103		CER CAP	0.1μ F.50V		
		CK733F1H104Z	+80/-20%	1	
C 104		CER CAP	0.1μ F.50V		
		CK733F1H104Z	+80/-20%	1	
C 105		NOT ASSIGN			
C 106		NOT ASSIGN			
C 107		TA ELECTLT CAP	1μ F		
		CS732E1V105M	± 20%.35V	1	
C 108		TA ELECTLT CAP	33μ F		
		CS734E1A336M	± 20%.10V	1	
C 109		TA ELECTLT CAP	33μ F		
		CS734E1A336M	± 20%.10V	1	
C 110		CER CAP	0.1μ F.50V		
		CK733F1H104Z	+80/-20%	1	
C 111		CER CAP	0.1μ F.50V		
		CK733F1H104Z	+80/-20%	1	
C 112		TA ELECTLT CAP	22μ F		
		CS734E1C226M	± 20%.16V	1	
C 113		CER CAP	0.01μ F		
		CK732B1H103K	± 10%.50V	1	
C 114		CER CAP	0.1μ F.50V		
		CK733F1H104Z	+80/-20%	1	
C 115		CER CAP	0.1μ F.50V		
		CK733F1H104Z	+80/-20%	1	

• : Selected at factory

DRAWING No. 44MB6744 -07 5/28

ANRITSU CORP.

Ref. No.	Part Code	Description	Rating	Qty	Note
C 116		CER CAP	0.1μ F.50V		
		CK733F1H104Z	+80/-20%	1	
C 117		CER CAP	0.1μ F.50V		
		CK733F1H104Z	+80/-20%	1	
C 118		TA ELECTLT CAP	4.7μ F		
		CS732E1A475M	± 20%.10V	1	
C 119		TA ELECTLT CAP	4.7μ F		
		CS732E1A475M	± 20%.10V	1	
C 120		CER CAP	0.01μ F		
		CK732B1H103K	± 10%.50V	1	
C 121		CER CAP	0.01μ F		
		CK732B1H103K	± 10%.50V	1	
C 122		CER CAP	0.1μ F.50V		
		CK733F1H104Z	+80/-20%	1	
C 123		CER CAP	0.1μ F.50V		
		CK733F1H104Z	+80/-20%	1	
C 124		CER CAP	0.1μ F.50V		
		CK733F1H104Z	+80/-20%	1	
C 125		CER CAP	0.01μ F		
		CK732B1H103K	± 10%.50V	1	
C 126		CER CAP	0.1μ F.50V		
		CK733F1H104Z	+80/-20%	1	
C 127		CER CAP	0.1μ F.50V		
		CK733F1H104Z	+80/-20%	1	
C 128		CER CAP	0.01μ F		
		CK732B1H103K	± 10%.50V	1	
C 129		CER CAP	3p F.50V		
		CC732CJ1H030C	± 0.25p F	1	
C 130		CER CAP	0.01μ F		
		CK732B1H103K	± 10%.50V	1	
C 131		CER CAP	0.1μ F.50V		
		CK733F1H104Z	+80/-20%	1	
C 132		CER CAP	0.1μ F.50V		
		CK733F1H104Z	+80/-20%	1	
C 133		CER CAP	0.1μ F.50V		
		CK733F1H104Z	+80/-20%	1	
C 134		CER CAP	0.01μ F		
		CK732B1H103K	± 10%.50V	1	
C 135		CER CAP	0.1μ F.50V		
		CK733F1H104Z	+80/-20%	1	
C 136		CER CAP	0.1μ F.50V		
		CK733F1H104Z	+80/-20%	1	
C 137		CER CAP	0.01μ F		
		CK732B1H103K	± 10%.50V	1	
C 138		CER CAP	0.1μ F.50V		
		CK733F1H104Z	+80/-20%	1	

DRAWING No. 44W86744 -07 6/28

ANRITSU CORP.

Ref. No.	Part Code	Description	Rating	Qty	Note
C 139		CER CAP	0.1μ F.50V		
		CK733F1H104Z	+80/-20%	1	
C 140		CER CAP	0.1μ F.50V		
		CK733F1H104Z	+80/-20%	1	
C 141		CER CAP	0.01μ F		
		CK732B1H103K	± 10%.50V	1	
C 142		CER CAP	0.1μ F.50V		
		CK733F1H104Z	+80/-20%	1	
C 143		CER CAP	0.1μ F.50V		
		CK733F1H104Z	+80/-20%	1	
C 144		CER CAP	0.1μ F.50V		
		CK733F1H104Z	+80/-20%	1	
C 145		NOT ASSIGN			
C 146		CER CAP	0.1μ F.50V		
		CK733F1H104Z	+80/-20%	1	
C 147		CER CAP	0.1μ F.50V		
		CK733F1H104Z	+80/-20%	1	
C 148		CER CAP	0.1μ F.50V		
		CK733F1H104Z	+80/-20%	1	
C 149		CER CAP	0.1μ F.50V		
		CK733F1H104Z	+80/-20%	1	
C 150		NOT ASSIGN			
C 151		NOT ASSIGN			
C 152		NOT ASSIGN			
C 153		NOT ASSIGN			
C 154		NOT ASSIGN			
C 155		CER CAP	1000p F		
		CK732B1H102K	± 10%.50V	1	
C 156		CER CAP	0.1μ F.50V		
		CK733F1H104Z	+80/-20%	1	
C 157		CER CAP	0.1μ F.50V		
		CK733F1H104Z	+80/-20%	1	
C 158		CER CAP	0.1μ F.50V		
		CK733F1H104Z	+80/-20%	1	
C 159		CER CAP	3p F.50V		
		CC732CJ1H030C	± 0.25p F	1	
C 160		CER CAP	22p F		
		CC732CH1H220J	± 5%.50V	1	
C 161		CER CAP	6p F.50V		
		CC732CH1H060D	± 0.5p F	1	

DRAWING No. 44W86744 -07 7/28

ANRITSU CORP.

Ref. No.	Part Code	Description	Rating	Qty	Note
C 162		CER CAP	47p F		
		CC732CH1H470J	± 5%.50V	1	
C 163		VAR CER CAP	11p F.100V		
		TZ03T110A		1	
C 164		NOT ASSIGN			
C 165		NOT ASSIGN			
C 166		NOT ASSIGN			
C 167		CER CAP	0.1μ F		
		CK924C1H104M	± 20%.50V	1	
C 168		CER CAP	10p F.50V		
		CC732CH1H100D	± 0.5p F	1	
C 169		CER CAP	0.1μ F.50V		
		CK733F1H104Z	+80/-20%	1	
C 170		CER CAP	0.1μ F.50V		
		CK733F1H104Z	+80/-20%	1	
C 171		CER CAP	0.1μ F.50V		
		CK733F1H104Z	+80/-20%	1	
C 172		CER CAP	0.1μ F.50V		
		CK733F1H104Z	+80/-20%	1	
C 173		CER CAP	0.1μ F.50V		
		CK733F1H104Z	+80/-20%	1	
C 174		TA ELECTLT CAP	3.3μ F		
		CS732E1D335M	± 20%.16V	1	
C 175		CER CAP	0.1μ F.50V		
		CK733F1H104Z	+80/-20%	1	
C 176		CER CAP	22p F		
		CC732CH1H220J	± 5%.50V	1	
C 177		TA ELECTLT CAP	3.3μ F		
		CS732E1D335M	± 20%.16V	1	
C 178		AL ELECTLT CAP	100μ F		
		CE04C1A101A	± 20%.10V	1	
C 179		CER CAP	0.1μ F.50V		
		CK733F1H104Z	+80/-20%	1	
C 180		TA ELECTLT CAP	3.3μ F		
		CS732E1D335M	± 20%.16V	1	
C 181		CER CAP	0.1μ F.50V		
		CK733F1H104Z	+80/-20%	1	
C 182		PLSTC FILM CAP	1500p F		
		ECQ-P1152FZ	± 1%.100V	1	
C 183		NOT ASSIGN			
C 184		PLSTC FILM CAP	5600p F		
		ECQ-P1562FZ	± 1%.100V	1	

DRAWING No. 44W86744 -07 8/28

ANRITSU CORP.

Ref. No.	Part Code	Description	Rating	Qty	Note
C 185		CER CAP	560p F		
		CC733CH1H561J	± 5%.50V	1	
C 186		CER CAP	2200p F		
		CK924C1H222M	± 20%.50V	1	
C 187		CER CAP	270p F		
		CC732CH1H271J	± 5%.50V	1	
C 188		CER CAP	1000p F		
		CC732CH1H102J	± 20%.50V	1	
C 189		PLSTC FILM CAP	1500p F		
		ECQ-P1152FZ	± 1%.100V	1	
C 190		NOT ASSIGN			
C 191		PLSTC FILM CAP	5600p F		
		ECQ-P1562FZ	± 1%.100V	1	
C 192		CER CAP	560p F		
		CC733CH1H561J	± 5%.50V	1	
C 193		CER CAP	2200p F		
		CK924C1H222M	± 20%.50V	1	
C 194		CER CAP	270p F		
		CC732CH1H271J	± 5%.50V	1	
C 195		CER CAP	1000p F		
		CC732CH1H102J	± 10%.50V	1	
C 196		CER CAP	680p F		
		CC733CH1H681J	± 5%.50V	1	
C 197		CER CAP	680p F		
		CC733CH1H681J	± 5%.50V	1	
C 198		NOT ASSIGN			
C 199		CER CAP	0.1μ F		
		CK924C1H104M	± 20%.50V	1	
C 200		NOT ASSIGN			
C 201		NOT ASSIGN			
C 202		CER CAP	0.1μ F		
		CK924C1H104M	± 20%.50V	1	
C 203		TA ELECTLT CAP	3.3μ F		
		CS732E1C335M	± 20%.16V	1	
C 204		CER CAP	0.1μ F.50V		
		CK733F1H104Z	+80/-20%	1	
C 205		CER CAP	0.1μ F.50V		
		CK733F1H104Z	+80/-20%	1	
C 206		CER CAP	0.1μ F.50V		
		CK733F1H104Z	+80/-20%	1	
C 207		CER CAP	0.1μ F.50V		
		CK733F1H104Z	+80/-20%	1	

DRAWING No. 44W86744 -07 9/28

ANRITSU CORP.

Ref. No.	Part Code	Description	Rating	Qty	Note
C 208		NOT ASSIGN			
C 209		NOT ASSIGN			
C 210		CER CAP	0.1μ F.50V		
		CK733F1H104Z	+80/-20%	1	
C 211		CER CAP	0.1μ F.50V		
		CK733F1H104Z	+80/-20%	1	
C 212		CER CAP	0.1μ F.50V		
		CK733F1H104Z	+80/-20%	1	
C 213		CER CAP	0.1μ F.50V		
		CK733F1H104Z	+80/-20%	1	
C 214		CER CAP	1μ F.50V		
		CK737F1H105Z	+80/-20%	1	
C 215		CER CAP	0.1μ F.50V		
		CK733F1H104Z	+80/-20%	1	
J 1		PLUG	90P		
		DIN41612-90PB		1	
J 2		RECEPTACLE			
		27DP-LR-PC		1	
J 3		RECEPTACLE			
		27DP-LR-PC		1	
J 4		RECEPTACLE			
		27DP-LR-PC		1	
L 1		INDUCTOR	22μ H.± 10%		
		NL453232-220K		1	
L 2		INDUCTOR	22μ H.± 10%		
		NL453232-220K		1	
L 3		NOT ASSIGN			
L 4		INDUCTOR	10μ H.± 10%		
		NL453232-100K		1	
L 5		INDUCTOR	0.39μH ± 5%		
		NL322522-R39J	450mA	1	
L 6		INDUCTOR	0.33μ H± 10%		
		NL322522-R33K		1	
L 7		FS1012-103J		1	
L 8		NOT ASSIGN			
L 9		NOT ASSIGN			

Drawing No. 44W86744 -07 10/28

ANRITSU CORP.

Ref. No.	Part Code	Description	Rating	Qty	Note
L 10		INDUCTOR	22μ H.± 10%		
		NL453232-220K		1	
L 11		FS0810-681K		1	
L 12		FS1012-272K		1	
L 13		FS0810-391K		1	
L 14		FS0810-221K		1	
L 15		FS0810-821K		1	
L 16		FS0810-121K		1	
L 17		FS0810-121K		1	
L 18		FS0810-471K		1	
L 19		FS0810-680K		1	
L 20		FS0810-681K		1	
L 21		FS1012-272K		1	
L 22		FS0810-391K		1	
L 23		FS0810-221K		1	
L 24		FS0810-821K		1	
L 25		FS0810-121K		1	
L 26		FS0810-121K		1	
L 27		FS0810-471K		1	
L 28		FS0810-680K		1	
L 29		INDUCTOR	22μ H.± 10%		
		NL453232-220K		1	
L 30		INDUCTOR	22μ H.± 10%		
		NL453232-220K		1	
L 31		NOT ASSIGN			
L 32		NOT ASSIGN			

Drawing No. 44W86744 -07 10/28

ANRITSU CORP.

Ref. No.	Part Code	Description	Rating	Qty	Note
L 33		NOT ASSIGN			
L 34		NOT ASSIGN			
L 35		NOT ASSIGN			
L 36		NOT ASSIGN			
L 37		INDUCTOR	0.39μH ± 5%		
		NL322522-R39J	450mA	1	
L 38		INDUCTOR	10μ H.± 10%		
		NL453232-100K		1	
L 39		INDUCTOR	0.33μ H± 10%		
		NL322522-R33K		1	
L 40		FS1012-103J		1	
L 41		NOT ASSIGN			
L 42		NOT ASSIGN			
L 43		INDUCTOR	22μ H.± 10%		
		NL453232-220K		1	
L 44		INDUCTOR	6.8μ H.± 10%		
		NL453232-6R8K		1	
L 45		INDUCTOR	10μ H.± 10%		
		NL453232-100K		1	
L 46		INDUCTOR	2.2μ H.± 10%		
		NL453232-2R2K		1	
L 47		INDUCTOR	10μ H.± 10%		
		NL453232-100K		1	
L 48		FS1012-272K		1	
L 49		FS0810-681K		1	
L 50		FS0810-821K		1	
L 51		FS0810-221K		1	
L 52		FS0810-471K		1	
L 53		FS0810-121K		1	
L 54		FS1012-272K		1	
L 55		FS0810-681K			

Drawing No. 44W86744 -07 10/28

ANRITSU CORP.

Ref. No.	Part Code	Description	Rating	Qty	Note
L 56		FS0810-821K		1	
L 57		FS0810-221K		1	
L 58		FS0810-471K		1	
L 59		FS0810-121K		1	
L 60		FS1012-562K		1	
L 61		FS1012-562K		1	
Q 1		NOT ASSIGN			
Q 2		IC			
		μ PC1654A		1	
Q 3		NOT ASSIGN			
Q 4		NOT ASSIGN			
Q 5		NOT ASSIGN			
Q 6		SL532C		1	
Q 7		SL532C		1	
Q 8		SL532C		1	
Q 9		SL532C		1	
Q 10		NOT ASSIGN			
Q 11		NOT ASSIGN			
Q 12		TRANSISTOR			
		2SC1253		1	
Q 13		DIODE			
		1SS279		1	
Q 14		TRANSISTOR			
		2SC2901		1	
Q 15		DIODE			
		1SS97		1	

Drawing No. 44W86744 -07 10/28

ANRITSU CORP.

Ref. No.	Part Code	Description	Rating	Qty	Note
Q 16		DIODE 1SS97		1	
Q 17		μ PC209C		1	
Q 18		DIODE 1SS99		1	
Q 19		DIODE 1SS99		1	
Q 20		DIODE 1SS99		1	
Q 21		DIODE 1SS99		1	
Q 22		DIODE 1SS99		1	
Q 23		DIODE 1SS99		1	
Q 24		μ PD5201G		1	
Q 25		IC μ PC71A		1	
Q 26		μ PD5201G		1	
Q 27		IC μ PC71A		1	
Q 28		μ PC177G2		1	
Q 29		NOT ASSIGN			
Q 30		NOT ASSIGN			
Q 31		NOT ASSIGN			
Q 32		NOT ASSIGN			
Q 33		NOT ASSIGN			
Q 34		NOT ASSIGN			
Q 35		74ALS00AF		1	
Q 36		74ALS00AF		1	
Q 37		NOT ASSIGN			
Q 38		IC 74HC00F		1	

DRAWING No. 44W86744 -07 14/28

ANRITSU CORP.

Ref. No.	Part Code	Description	Rating	Qty	Note
Q 39		74ALS74F		1	
Q 40		74ALS04BF		1	
Q 41		DIODE 1S953		1	
Q 42		TRANSISTOR 2SA1226(E3 OR E4)		1	
Q 43		DIODE 1S953		1	
Q 44		2SC2223 (F13 OR F1		1	
Q 45		OP-07DPS		1	
Q 46		IC TC4051BF		1	
Q 47		OP-07DPS		1	
Q 48		IC TC4051BF		1	
Q 49		74ALS00AF		1	
Q 50		NOT ASSIGN			
Q 51		NOT ASSIGN			
Q 52		NOT ASSIGN			
Q 53		NOT ASSIGN			
Q 54		NOT ASSIGN			
Q 55		μ PC151G2		1	
Q 56		NJM78M05FA		1	
Q 57		NJM79L05A		1	
Q 58		μ PC4570G2		1	
Q 59		NOT ASSIGN			
Q 60		AD588AQ		1	
Q 61		AD569AD		1	

DRAWING No. 44W86744 -07 15/28

ANRITSU CORP.

Ref. No.	Part Code	Description	Rating	Qty	Note
Q 82		μ PC4570G2		1	
Q 83		μ PD5201G		1	
Q 84		74HC374F		1	
Q 85		ZENER DIODE RD5.1MB2		1	
Q 86		NJM78L12A		1	
Q 87		DIODE 1S2835		1	
Q 88		2SC2223 (F13 OR F1		1	
Q 89		74F191SJ		1	
Q 90		74F191SJ		1	
Q 91		74AS04F		1	
Q 92		IC 74HC74F		1	
Q 93		IC μ PC78L08		1	
Q 94		NJM79L09A		1	
Q 95		DIODE 1S2835		1	
Q 96		74LS645-1		1	
Q 97		74LS645-1		1	
Q 98		74LS244F		1	
Q 99		NOT ASSIGN			
Q 100		NOT ASSIGN			
Q 101		NOT ASSIGN			
Q 102		IC μ PC1654A		1	
R 1		SL532C		1	
R 2		SL532C		1	
R 3		NOT ASSIGN			
R 4		NOT ASSIGN			

DRAWING No. 44W86744 -07 16/28

ANRITSU CORP.

Ref. No.	Part Code	Description	Rating	Qty	Note
Q 85		SL532C		1	
Q 86		SL532C		1	
Q 87		TRANSISTOR 2SC1253		1	
Q 88		NOT ASSIGN			
Q 89		NOT ASSIGN			
Q 90		DIODE 1SS97		1	
Q 91		DIODE 1SS97		1	
Q 92		μ PC209C		1	
Q 93		NOT ASSIGN			
Q 94		NOT ASSIGN			
Q 95		NOT ASSIGN			
Q 96		74ALS138F		1	
Q 97		74ALS32F		1	
Q 98		74HC174F		1	
Q 99		74HC374F		1	
Q 100		74HC367F		1	
Q 101		μ PC251G2		1	
Q 102		IC TC4051BF		1	
R 1		NOT ASSIGN			
R 2		NOT ASSIGN			
R 3		CARBON FILM RES ARD25T470J	47Ω ± 5%,1/4W	1	
R 4		NOT ASSIGN			

DRAWING No. 44W86744 -07 17/28

ANRITSU CORP.

Ref. No.	Part Code	Description	Rating	Qty	Note
R 5		NOT ASSIGN			
R 6		NOT ASSIGN			
R 7		METAL FILM RESISTOR	100Ω		
		RN73G2A101D	± 0.5%.1/10W	1	
R 8		METAL FILM RESISTOR	62Ω		
		RN73G2A620D	± 0.5%.1/10W	1	
R 9		METAL FILM RESISTOR	100Ω		
		RN73G2A101D	± 0.5%.1/10W	1	
R 10		NOT ASSIGN			
R 11		NOT ASSIGN			
R 12		NOT ASSIGN			
R 13		NOT ASSIGN			
R 14		NOT ASSIGN			
R 15		CERMET RESISTOR	330Ω		
		RK73M2A331J	± 5%.1/10W	1	
R 16		CERMET RESISTOR	330Ω		
		RK73M2A331J	± 5%.1/10W	1	
R 17		CERMET RESISTOR	330Ω		
		RK73M2A331J	± 5%.1/10W	1	
R 18		CERMET RESISTOR	330Ω		
		RK73M2A331J	± 5%.1/10W	1	
R 19		CERMET RESISTOR	51Ω		
		RK73M2A510J	± 5%.1/10W	1	
R 20		CERMET RESISTOR	150Ω		
		RK73M2A151J	± 5%.1/10W	1	
R 21		METAL FILM RESISTOR	4.7k Ω		
		RN73G2A472D	± 0.5%.1/10W	1	
R 22		METAL FILM RESISTOR	82Ω		
		RN73G2A820D	± 0.5%.1/10W	1	
R 23		METAL FILM RESISTOR	4.7k Ω		
		RN73G2A472D	± 0.5%.1/10W	1	
R 24		METAL FILM RESISTOR	15Ω		
		RN73G2A150D	± 0.5%.1/10W	1	
R 25		METAL FILM RESISTOR	150Ω		
		RN73G2A151D	± 0.5%.1/10W	1	
R 26		CERMET RESISTOR	220Ω		
		RK73M2A221J	± 5%.1/10W	1	
R 27		CERMET RESISTOR	2.7k Ω		
		RK73M2A272J	± 5%.1/10W	1	

Selected by Destination | Drawing No. 44W86744 -07 | 18/28

ANRITSU CORP.

Ref. No.	Part Code	Description	Rating	Qty	Note
R 28					
R 29		CERMET RESISTOR	1.5k Ω		
		RK73M2A152J	± 5%.1/10W	1	
R 30		CERMET RESISTOR	1k Ω		
		RK73M2A102J	± 5%.1/10W	1	
R 31		CERMET RESISTOR	470Ω		
		RK73M2A471J	± 5%.1/10W	1	
R 32		CERMET RESISTOR	470Ω		
		RK73M2A471J	± 5%.1/10W	1	
R 33		NOT ASSIGN			
R 34		METAL FILM RESISTOR	2.2k Ω		
		RN73G2A222D	± 0.5%.1/10W	1	
R 35		METAL FILM RESISTOR	5.6k Ω		
		RN73G2A562D	± 0.5%.1/10W	1	
R 36		METAL FILM RESISTOR	12k Ω		
		RN73G2A123D	± 0.5%.1/10W	1	
R 37		NOT ASSIGN			
R 38		NOT ASSIGN			
R 39		NOT ASSIGN			
R 40		METAL FILM RESISTOR	560Ω		
		RN73G2A561D	± 0.5%.1/10W	1	
R 41		CERMET RESISTOR	560Ω		
		RK73M2A561J	± 5%.1/10W	1	
R 42		METAL FILM RESISTOR	560Ω		
		RN73G2A561D	± 0.5%.1/10W	1	
R 43		NOT ASSIGN			
R 44		CERMET RESISTOR	560Ω		
		RK73M2A561J	± 5%.1/10W	1	
R 45		NOT ASSIGN			
R 46		NOT ASSIGN			
R 47		CERMET RESISTOR	560Ω		
		RK73M2A561J	± 5%.1/10W	1	
R 48		NOT ASSIGN			
R 49		NOT ASSIGN			
R 50		CERMET RESISTOR	560Ω		
		RK73M2A561J	± 5%.1/10W	1	

Selected by Destination | Drawing No. 44W86744 -07 | 19/28

ANRITSU CORP.

Ref. No.	Part Code	Description	Rating	Qty	Note
R 51		NOT ASSIGN			
R 52		CERMET RESISTOR	560Ω		
		RK73M2A561J	± 5%.1/10W	1	
R 53		NOT ASSIGN			
R 54		CERMET RESISTOR	560Ω		
		RK73M2A561J	± 5%.1/10W	1	
R 55		NOT ASSIGN			
R 56		METAL FILM RESISTOR	100k Ω		
		RN73G2A104D	± 0.5%.1/10W	1	
R 57		METAL FILM RESISTOR	100k Ω		
		RN73G2A104D	± 0.5%.1/10W	1	
R 58		METAL FILM RESISTOR	100k Ω		
		RN73G2A104D	± 0.5%.1/10W	1	
R 59		METAL FILM RESISTOR	10k Ω		
		RN73G2A103D	± 0.5%.1/10W	1	
R 60		METAL FILM RESISTOR	10k Ω		
		RN73G2A103D	± 0.5%.1/10W	1	
R 61		NOT ASSIGN			
R 62		NOT ASSIGN			
R 63		NOT ASSIGN			
R 64		NOT ASSIGN			
R 65		NOT ASSIGN			
R 66		CERMET RESISTOR	3.3k Ω		
		RK73M2A332J	± 5%.1/10W	1	
R 67		CERMET RESISTOR	3.3k Ω		
		RK73M2A332J	± 5%.1/10W	1	
R 68		CERMET RESISTOR	10k Ω		
		RK73M2A103J	± 5%.1/10W	1	
R 69		CERMET RESISTOR	4.7k Ω		
		RK73M2A472J	± 5%.1/10W	1	
R 70		NOT ASSIGN			
R 71		CERMET RESISTOR	1k Ω		
		RK73M2A102J	± 5%.1/10W	1	
R 72		CERMET RESISTOR	4.7k Ω		
		RK73M2A472J	± 5%.1/10W	1	
R 73		NOT ASSIGN			

Selected by Destination | Drawing No. 44W86744 -07 | 20/28

ANRITSU CORP.

Ref. No.	Part Code	Description	Rating	Qty	Note
R 74		CERMET RESISTOR	1k Ω		
		RK73M2A102J	± 5%.1/10W	1	
R 75		METAL FILM RESISTOR	470Ω		
		RN73G2A471D	± 0.5%.1/10W	1	
R 76		METAL FILM RESISTOR	2.2k Ω		
		RN73G2A222D	± 0.5%.1/10W	1	
R 77		METAL FILM RESISTOR	4.3k Ω		
		RN73G2A432D	± 0.5%.1/10W	1	
R 78		METAL FILM RESISTOR	6.8k Ω		
		RN73G2A682D	± 0.5%.1/10W	1	
R 79		NOT ASSIGN			
R 80		METAL FILM RESISTOR	100k Ω		
		RN73G2A104D	± 0.5%.1/10W	1	
R 81		METAL FILM RESISTOR	5.1k Ω		
		RN73G2A512D	± 0.5%.1/10W	1	
R 82		METAL FILM RESISTOR	24k Ω		
		RN73G2A243D	± 0.5%.1/10W	1	
R 83		METAL FILM RESISTOR	200k Ω		
		RN14K2E2003D	± 0.5%.1/4W	1	
R 84		METAL FILM RESISTOR	200k Ω		
		RN14K2E2003D	± 0.5%.1/4W	1	
R 85		METAL FILM RESISTOR	3.3k Ω		
		RN73G2A332D	± 0.5%.1/10W	1	
R 86		METAL FILM RESISTOR	20k Ω		
		RN73G2A203D	± 0.5%.1/10W	1	
R 87		METAL FILM RESISTOR	200k Ω		
		RN14K2E2003D	± 0.5%.1/4W	1	
R 88		METAL FILM RESISTOR	43k Ω		
		RN73G2A433D	± 0.5%.1/10W	1	
R 89		METAL FILM RESISTOR	10k Ω		
		RN73G2A103D	± 0.5%.1/10W	1	
R 90		METAL FILM RESISTOR	39k Ω		
		RN73G2A393D	± 0.5%.1/10W	1	
R 91		METAL FILM RESISTOR	10k Ω		
		RN73G2A103D	± 0.5%.1/10W	1	
R 92		METAL FILM RESISTOR	470Ω		
		RN73G2A471D	± 0.5%.1/10W	1	
R 93		METAL FILM RESISTOR	470Ω		
		RN73G2A471D	± 0.5%.1/10W	1	
R 94		METAL FILM RESISTOR	1k Ω		
		RN73G2A102D	± 0.5%.1/10W	1	
R 95		NOT ASSIGN			
R 96		NOT ASSIGN			

Selected by Destination | Drawing No. 44W86744 -07 | 21/28

ANRITSU CORP.

Ref. No.	Part Code	Description	Rating	Qty	Note
R 97		NOT ASSIGN			
R 98		CERMET RESISTOR	51Ω		
		RK73M2A510J	± 5%,1/10W	1	
R 99		NOT ASSIGN			
R 100		CERMET RESISTOR	3.9k Ω		
		RK73M2A392J	± 5%,1/10W	1	
R 101		CERMET RESISTOR	4.7k Ω		
		RK73M2A472J	± 5%,1/10W	1	
R 102		CERMET RESISTOR	100Ω		
		RK73M2A101J	± 5%,1/10W	1	
R 103		CERMET RESISTOR	330Ω		
		RK73M2A331J	± 5%,1/10W	1	
R 104		CERMET RESISTOR	56Ω		
		RK73M2A560J	± 5%,1/10W	1	
R 105		NOT ASSIGN			
R 106		CERMET RESISTOR	513k Ω		
		RK73M2A513J	± 5%,1/10W	1	
R 107		VARIABLE RESISTOR	10k Ω		
		RG04B103V	± 20%,1/4W	1	•
R 108		VARIABLE RESISTOR	10k Ω		
		RG04B103V	± 20%,1/4W	1	•
R 109		VARIABLE RESISTOR	10k Ω		
		RG04B103V	± 20%,1/4W	1	•
R 110		VARIABLE RESISTOR	10k Ω		
		RG04B103V	± 20%,1/4W	1	•
R 111		VARIABLE RESISTOR	10k Ω		
		RG04B103V	± 20%,1/4W	1	•
R 112		VARIABLE RESISTOR	10k Ω		
		RG04B103V	± 20%,1/4W	1	•
R 113		VARIABLE RESISTOR	10k Ω		
		RG04B103V	± 20%,1/4W	1	•
R 114		VARIABLE RESISTOR	10k Ω		
		RG04B103V	± 20%,1/4W	1	•
R 115		VARIABLE RESISTOR	10k Ω		
		RG04B103V	± 20%,1/4W	1	•
R 116		METAL FILM RESISTOR	100Ω -2KΩ		
		RN73G2A101-202D	± 0.5%,1/10W	1	•510Ω
R 117		METAL FILM RESISTOR	100Ω -2KΩ		
		RN73G2A101-202D	± 0.5%,1/10W	1	•750Ω
R 118		NOT ASSIGN			
R 119		NOT ASSIGN			

* Selected at factory

Drawing No. 44MB6744 -07 22/28

ANRITSU CORP.

Ref. No.	Part Code	Description	Rating	Qty	Note
R 120		NOT ASSIGN			
R 121		NOT ASSIGN			
R 122		METAL FILM RESISTOR	499Ω		
		RN14K2E4990D	± 0.5%,1/4W	1	
R 123		METAL FILM RESISTOR	22Ω		
		RS2FS220JL	± 5%,2W	1	
R 124		METAL FILM RESISTOR	22Ω		
		RN14K2H220J	± 5%,1/2W	1	
R 125		NOT ASSIGN			
R 126		NOT ASSIGN			
R 127		NOT ASSIGN			
R 128		NOT ASSIGN			
R 129		NOT ASSIGN			
R 130		NOT ASSIGN			
R 131		NOT ASSIGN			
R 132		NOT ASSIGN			
R 133		NOT ASSIGN			
R 134		NOT ASSIGN			
R 135		NOT ASSIGN			
R 136		NOT ASSIGN			
R 137		NOT ASSIGN			
R 138		CERMET RESISTOR	10k Ω		
		RK73M2A103J	± 5%,1/10W	1	
R 139		CERMET RESISTOR	1k Ω		
		RK73M2A102J	± 5%,1/10W	1	
R 140		NOT ASSIGN			
R 141		CERMET RESISTOR	10k Ω		
		RK73M2A103J	± 5%,1/10W	1	
R 142		METAL FILM RESISTOR	36k Ω		
		RN73G2A363D	± 0.5%,1/10W	1	

* Selected at factory

Drawing No. 44MB6744 -07 23/28

ANRITSU CORP.

Ref. No.	Part Code	Description	Rating	Qty	Note
R 143		CERMET RESISTOR	100k Ω		
		RK73M2A104J	± 5%,1/10W	1	
R 144		CERMET RESISTOR	150k Ω		
		RK73M2A154J	± 5%,1/10W	1	
R 145		METAL FILM RESISTOR	4.7k Ω		
		RN73G2A472D	± 0.5%,1/10W	1	
R 146		CERMET RESISTOR	100k Ω		
		RK73M2A104J	± 5%,1/10W	1	
R 147		CERMET RESISTOR	10k Ω		
		RK73M2A103J	± 5%,1/10W	1	
R 148		CERMET RESISTOR	3.9k Ω		
		RK73M2A392J	± 5%,1/10W	1	
R 149		NOT ASSIGN			
R 150		CERMET RESISTOR	1k Ω		
		RK73M2A102J	± 5%,1/10W	1	
R 151		CERMET RESISTOR	330Ω		
		RK73M2A331J	± 5%,1/10W	1	
R 152		CERMET RESISTOR	1k Ω		
		RK73M2A102J	± 5%,1/10W	1	
R 153		CERMET RESISTOR	680Ω		
		RK73M2A681J	± 5%,1/10W	1	
R 154		NOT ASSIGN			
R 155		NOT ASSIGN			
R 156		NOT ASSIGN			
R 157		NOT ASSIGN			
R 158		CARBON FILM RES	47Ω		
		ARD25T470J	± 5%,1/4W	1	
R 159		NOT ASSIGN			
R 160		METAL FILM RESISTOR	100Ω		
		RN73G2A101D	± 0.5%,1/10W	1	
R 161		METAL FILM RESISTOR	62Ω		
		RN73G2A620D	± 0.5%,1/10W	1	
R 162		METAL FILM RESISTOR	100Ω		
		RN73G2A101D	± 0.5%,1/10W	1	
R 163		CERMET RESISTOR	330Ω		
		RK73M2A331J	± 5%,1/10W	1	
R 164		CERMET RESISTOR	330Ω		
		RK73M2A331J	± 5%,1/10W	1	
R 165		CERMET RESISTOR	330Ω		
		RK73M2A331J	± 5%,1/10W	1	

* Selected at factory

Drawing No. 44MB6744 -07 24/28

ANRITSU CORP.

Ref. No.	Part Code	Description	Rating	Qty	Note
R 166		CERMET RESISTOR	330Ω		
		RK73M2A331J	± 5%,1/10W	1	
R 167		NOT ASSIGN			
R 168		CERMET RESISTOR	51Ω		
		RK73M2A510J	± 5%,1/10W	1	
R 169		CERMET RESISTOR	150Ω		
		RK73M2A151J	± 5%,1/10W	1	
R 170		METAL FILM RESISTOR	4.7k Ω		
		RN73G2A472D	± 0.5%,1/10W	1	
R 171		METAL FILM RESISTOR	4.7k Ω		
		RN73G2A472D	± 0.5%,1/10W	1	
R 172		METAL FILM RESISTOR	150Ω		
		RN73G2A151D	± 0.5%,1/10W	1	
R 173		METAL FILM RESISTOR	15Ω		
		RN73G2A150D	± 0.5%,1/10W	1	
R 174		METAL FILM RESISTOR	82Ω		
		RN73G2A820D	± 0.5%,1/10W	1	
R 175		CERMET RESISTOR	1.5k Ω		
		RK73M2A152J	± 5%,1/10W	1	
R 176		CERMET RESISTOR	1k Ω		
		RK73M2A102J	± 5%,1/10W	1	
R 177		CERMET RESISTOR	470Ω		
		RK73M2A471J	± 5%,1/10W	1	
R 178		CERMET RESISTOR	470Ω		
		RK73M2A471J	± 5%,1/10W	1	
R 179		NOT ASSIGN			
R 180		METAL FILM RESISTOR	2.2k Ω		
		RN73G2A222D	± 0.5%,1/10W	1	
R 181		METAL FILM RESISTOR	5.6k Ω		
		RN73G2A562D	± 0.5%,1/10W	1	
R 182		METAL FILM RESISTOR	12k Ω		
		RN73G2A123D	± 0.5%,1/10W	1	
R 183		NOT ASSIGN			
R 184		CERMET RESISTOR	1k Ω		
		RK73M2A102J	± 5%,1/8W	1	
R 185		CERMET RESISTOR	1k Ω		
		RK73M2A102J	± 5%,1/8W	1	
R 186		CERMET RESISTOR	10k Ω		
		RK73M2A103J	± 5%,1/10W	1	
R 187		NOT ASSIGN			
R 188		NOT ASSIGN			

* Selected at factory

Drawing No. 44MB6744 -07 25/28

ANRITSU CORP.

Ref. No.	Part Code	Description	Rating	Qty	Note
R 189		NOT ASSIGN			
R 190		NOT ASSIGN			
R 191		NOT ASSIGN			
R 192		NOT ASSIGN			
R 193		NOT ASSIGN			
R 194		NOT ASSIGN			
R 195		METAL FILM RESISTOR RN73G2A103D	10k Ω ± 0.5%.1/10W	1	
R 196		METAL FILM RESISTOR RN73G2A152D	1.5k Ω ± 0.5%.1/10W	1	
R 197		METAL FILM RESISTOR RN73G2A362D	3.6k Ω ± 0.5%.1/10W	1	
R 198		METAL FILM RESISTOR RN73G2A103D	10k Ω ± 0.5%.1/10W	1	
R 199		NOT ASSIGN			
R 200		METAL FILM RESISTOR RN73G2A103D	10k Ω ± 0.5%.1/10W	1	
R 201		NOT ASSIGN			
R 202		NOT ASSIGN			
R 203		NOT ASSIGN			
R 204		NOT ASSIGN			
R 205		NOT ASSIGN			
R 206		NOT ASSIGN			
R 207		METAL FILM RESISTOR RN73G2A471D	470Ω ± 0.5%.1/10W	1	
R 208		METAL FILM RESISTOR RN73G2A122D	1.2k Ω ± 0.5%.1/10W	1	
R 209		METAL FILM RESISTOR RN73G2A202D	2k Ω ± 0.5%.1/10W	1	
R 210		METAL FILM RESISTOR RN73G2A472D	4.7k Ω ± 0.5%.1/10W	1	
R 211		METAL FILM RESISTOR RN73G2A123D	12k Ω ± 0.5%.1/10W	1	

* Selected at factory — DRAWING No. 44W86744 -07 — 28/28

ANRITSU CORP.

Ref. No.	Part Code	Description	Rating	Qty	Note
R 212		METAL FILM RESISTOR RN73G2A561D	560Ω ± 0.5%.1/10W	1	
R 213		METAL FILM RESISTOR RN73G2A243D	24k Ω ± 0.5%.1/10W	1	
R 214		METAL FILM RESISTOR RN73G2A102D	1k Ω ± 0.5%.1/10W	1	
R 215		METAL FILM RESISTOR RN73G2A473D	47k Ω ± 0.5%.1/10W	1	
R 216		METAL FILM RESISTOR RN73G2A104D	100k Ω ± 0.5%.1/10W	1	
R 217		METAL FILM RESISTOR RN73G2A243D	24k Ω ± 0.5%.1/10W	1	
R 218		METAL FILM RESISTOR RN73G2A561D	560Ω ± 0.5%.1/10W	1	
R 219		METAL FILM RESISTOR RN73G2A562D	5.6k Ω ± 0.5%.1/10W	1	
R 220		NOT ASSIGN			
R 221		METAL FILM RESISTOR RN73G2A561D	560Ω ± 0.5%.1/10W	1	
R 222		CERMET RESISTOR RK73M2A104J	100k Ω ± 5%.1/10W	1	
R 223		CERMET RESISTOR RK73M2A103J	10k Ω ± 5%.1/10W	1	
R 224		VARIABLE RESISTOR RG04B104V	100k Ω ± 20%.1/4W	1	*
R 225		METAL FILM RESISTOR RN73G2A300D	30Ω ± 0.5%.1/10W	1	
R 226		METAL FILM RESISTOR RN73G2A121D	120Ω ± 0.5%.1/10W	1	
R 227		METAL FILM RESISTOR RN73G2A271D	270Ω ± 0.5%.1/10W	1	
R 228		METAL FILM RESISTOR RN73G2A272D	2.7k Ω ± 0.5%.1/10W	1	
R 229		METAL FILM RESISTOR RN73G2A361D	360Ω ± 0.5%.1/10W	1	
R 230		METAL FILM RESISTOR RN73G2A152D	1.5k Ω ± 0.5%.1/10W	1	
R 231		METAL FILM RESISTOR RN73G2A122D	1.2k Ω ± 0.5%.1/10W	1	
R 232		METAL FILM RESISTOR RN73G2A100D	10Ω ± 0.5%.1/10W	1	
R 233		METAL FILM RESISTOR RN73G2A100D	10Ω ± 0.5%.1/10W	1	
R 234		METAL FILM RESISTOR RN73G2A302D	3k Ω ± 0.5%.1/10W	1	

* Selected at factory — DRAWING No. 44W86744 -07 — 27/28

ANRITSU CORP.

Parts List of: A6-A1 CPU 19

Ref. No.	Part Code	Description	Rating	Qty	Note
R 235		METAL FILM RESISTOR RN73G2A301D	300Ω ± 0.5%.1/10W	1	
R 236		METAL FILM RESISTOR RN73G2A511D	510Ω ± 0.5%.1/10W	1	
R 237		METAL FILM RESISTOR RN73G2A300D	30Ω ± 0.5%.1/10W	1	
R 238		METAL FILM RESISTOR RN73G2A301D	300Ω ± 0.5%.1/10W	1	
R 239		METAL FILM RESISTOR RN73G2A300D	30Ω ± 0.5%.1/10W	1	
R 240		NOT ASSIGN			
R 241		RES ARRAY IHR-8-103JA		1	
R 242		RES ARRAY IHR-8-103JA		1	
X 1		7130A-ASA01(20MHZ)	20MHZ	1	
Z 1		7K9-41MTC		1	
Z 2		7K9-41MTC		1	
Z 3		7K9-41MTC		1	
Z 4		7K9-41MTC		1	

* Selected at factory — DRAWING No. 44W86744 -07 — 28/28

ANRITSU CORP.

Ref. No.	Part Code	Description	Rating	Qty	Note
C 1		CER CAP CK733F1H104Z (A 5	0.1μF.50V +80/-20%	1	
C 2		CER CAP CK733F1H104Z (A 5	0.1μF.50V +80/-20%	1	
C 3		CER CAP CK733F1H104Z (A 5	0.1μF.50V +80/-20%	1	
C 4		CER CAP CK733F1H104Z (A 5	0.1μF.50V +80/-20%	1	
C 5		NOT ASSIGNED			
C 6		NOT ASSIGNED			
C 7		NOT ASSIGNED			
C 8		NOT ASSIGNED			
C 9		CER CAP CK733F1H104Z (A 5	0.1μF.50V +80/-20%	1	
C 10		CER CAP CK733F1H104Z (A 5	0.1μF.50V +80/-20%	1	
C 11		CER CAP CK733F1H104Z (A 5	0.1μF.50V +80/-20%	1	
C 12		CER CAP CK733F1H104Z (A 5	0.1μF.50V +80/-20%	1	
C 13		NOT ASSIGNED			
C 14		NOT ASSIGNED			
C 15		NOT ASSIGNED			
C 16		CER CAP CK733F1H104Z (A 5	0.1μF.50V +80/-20%	1	
C 17		CER CAP CK733F1H104Z (A 5	0.1μF.50V +80/-20%	1	
C 18		CER CAP CK733F1H104Z (A 5	0.1μF.50V +80/-20%	1	
C 19		CER CAP CK733F1H104Z (A 5	0.1μF.50V +80/-20%	1	
C 20		NOT ASSIGNED			
C 21		NOT ASSIGNED			
C 22		CER CAP CK733F1H104Z (A 5	0.1μF.50V +80/-20%	1	
C 23		CER CAP CK733F1H104Z (A 5	0.1μF.50V +80/-20%	1	

DESIGNED BY

APPROVED BY

Dep.

* Selected at factory — DRAWING No. 44W86746 — 1/11

ANRITSU CORP.

Parts List of: A6-A1 CPU

Ref. No.	Part Code	Description	Rating	Qty	Note
C 24		CER CAP	0.1μ F,50V		
		CK733F1H104Z (A 5	+80/-20%	1	
C 25		CER CAP	0.1μ F,50V		
		CK733F1H104Z (A 5	+80/-20%	1	
C 26		CER CAP	0.1μ F,50V		
		CK733F1H104Z (A 5	+80/-20%	1	
C 27		CER CAP	0.1μ F,50V		
		CK733F1H104Z (A 5	+80/-20%	1	
C 28		CER CAP	0.1μ F,50V		
		CK733F1H104Z (A 5	+80/-20%	1	
C 29		CER CAP	0.1μ F,50V		
		CK733F1H104Z (A 5	+80/-20%	1	
C 30		CER CAP	0.1μ F,50V		
		CK733F1H104Z (A 5	+80/-20%	1	
C 31		CER CAP	39p F		
		CC732CH1H390J (Q b	± 5%,50V	1	
C 32		CER CAP	15p F		
		CC732CH1H150J (E b	± 5%,50V	1	
C 33		CER CAP	0.1μ F,50V		
		CK733F1H104Z (A 5	+80/-20%	1	
C 34		CER CAP	0.1μ F,50V		
		CK733F1H104Z (A 5	+80/-20%	1	
C 35		NOT ASSIGNED			
C 36		CER CAP	0.1μ F,50V		
		CK733F1H104Z (A 5	+80/-20%	1	
C 37		CER CAP	0.1μ F,50V		
		CK733F1H104Z (A 5	+80/-20%	1	
C 38		NOT ASSIGNED			
C 39		CER CAP	0.1μ F,50V		
		CK733F1H104Z (A 5	+80/-20%	1	
C 40		CER CAP	0.1μ F,50V		
		CK733F1H104Z (A 5	+80/-20%	1	
C 41		CER CAP	0.1μ F,50V		
		CK733F1H104Z (A 5	+80/-20%	1	
C 42		CER CAP	0.1μ F,50V		
		CK733F1H104Z (A 5	+80/-20%	1	
C 43		CK733B1H104K		1	
C 44		NOT ASSIGNED			
C 45		NOT ASSIGNED			
C 46		NOT ASSIGNED			

Rev. No./Date | DESIGNED BY | CHECKED BY | APPROVED BY | Dep.

* : Selected at factory

DRAWING No. 44486746 2/11

No.D073-1988.11

ANRITSU CORP.

Parts List of: A6-A1 CPU

Ref. No.	Part Code	Description	Rating	Qty	Note
C 47		CER CAP	0.1μ F,50V		
		CK733F1H104Z (A 5	+80/-20%	1	
C 48		CER CAP	0.1μ F,50V		
		CK733F1H104Z (A 5	+80/-20%	1	
C 49		CER CAP	0.1μ F,50V		
		CK733F1H104Z (A 5	+80/-20%	1	
C 50	2192-Y0476	AL ELECTLT CAP	47μ F		
		CE04C1E470A	± 20%,25V	1	
C 51		CER CAP	0.1μ F,50V		
		CK733F1H104Z (A 5	+80/-20%	1	
C 52	2192-Y0476	AL ELECTLT CAP	47μ F		
		CE04C1E470A	± 20%,25V	1	
C 53		CER CAP	0.1μ F,50V		
		CK733F1H104Z (A 5	+80/-20%	1	
C 54		AL ELECTLT CAP	100μ F		
		CE04C1A101A	± 20%,10V	1	
C 55		AL ELECTLT CAP	100μ F		
		CE04C1A101A	± 20%,10V	1	
C 56	2192-Y0476	AL ELECTLT CAP	47μ F		
		CE04C1E470A	± 20%,25V	1	
C 57		CER CAP	0.1μ F,50V		
		CK733F1H104Z (A 5	+80/-20%	1	
C 58	2192-Y0476	AL ELECTLT CAP	47μ F		
		CE04C1E470A	± 20%,25V	1	
C 59		CER CAP	0.1μ F,50V		
		CK733F1H104Z (A 5	+80/-20%	1	
C 60		CER CAP	0.1μ F,50V		
		CK733F1H104Z (A 5	+80/-20%	1	
C 61		CER CAP	0.1μ F,50V		
		CK733F1H104Z (A 5	+80/-20%	1	
C 62		CER CAP	0.1μ F,50V		
		CK733F1H104Z (A 5	+80/-20%	1	
C 63		CER CAP	0.1μ F,50V		
		CK733F1H104Z (A 5	+80/-20%	1	
C 64		CER CAP	0.1μ F,50V		
		CK733F1H104Z (A 5	+80/-20%	1	
C 65		CER CAP	0.1μ F,50V		
		CK733F1H104Z (A 5	+80/-20%	1	
C 66		CER CAP	0.1μ F,50V		
		CK733F1H104Z (A 5	+80/-20%	1	
C 67		AL ELECTLT CAP	2.2μ F		
		CE04C1H2R2A	± 20%,50V	1	
C 68		CER CAP	0.1μ F,50V		
		CK733F1H104Z (A 5	+80/-20%	1	
C 69		CER CAP	0.1μ F,50V		
		CK733F1H104Z (A 5	+80/-20%	1	

Rev. No./Date | DESIGNED BY | CHECKED BY | APPROVED BY | Dep.

* : Selected at factory

DRAWING No. 44486746 3/11

No.D073-1988.11

ANRITSU CORP.

Parts List of: A6-A1 CPU

Ref. No.	Part Code	Description	Rating	Qty	Note
C 70		CER CAP	0.1μ F,50V		
		CK733F1H104Z (A 5	+80/-20%	1	
C 71		CER CAP	0.1μ F,50V		
		CK733F1H104Z (A 5	+80/-20%	1	
C 72		CER CAP	0.1μ F,50V		
		CK733F1H104Z (A 5	+80/-20%	1	
C 73		CER CAP	0.1μ F,50V		
		CK733F1H104Z (A 5	+80/-20%	1	
C 74		CER CAP	0.1μ F,50V		
		CK733F1H104Z (A 5	+80/-20%	1	
C 75		CER CAP	0.1μ F,50V		
		CK733F1H104Z (A 5	+80/-20%	1	
C 76		CER CAP	0.1μ F,50V		
		CK733F1H104Z (A 5	+80/-20%	1	
C 77		CER CAP	0.1μ F,50V		
		CK733F1H104Z (A 5	+80/-20%	1	
C 78		CER CAP	0.1μ F,50V		
		CK733F1H104Z (A 5	+80/-20%	1	
C 79		CER CAP	0.1μ F,50V		
		CK733F1H104Z (A 5	+80/-20%	1	
C 80		CER CAP	0.1μ F,50V		
		CK733F1H104Z (A 5	+80/-20%	1	
C 81		CER CAP	0.1μ F,50V		
		CK733F1H104Z (A 5	+80/-20%	1	
C 82		CER CAP	0.1μ F,50V		
		CK733F1H104Z (A 5	+80/-20%	1	
C 83		CER CAP	0.1μ F,50V		
		CK733F1H104Z (A 5	+80/-20%	1	
C 84		AL ELECTLT CAP			
		CE04C1E220		1	34C73226
C 85		AL ELECTLT CAP			
		CE04C1E220		1	
C 86		CER CAP	0.1μ F,50V		
		CK733F1H104Z (A 5	+80/-20%	1	
C 87		CER CAP	0.1μ F,50V		
		CK733F1H104Z (A 5	+80/-20%	1	
C 88		CER CAP	0.1μ F,50V		
		CK733F1H104Z (A 5	+80/-20%	1	
C 89		NOT ASSIGNED			
C 90		CER CAP	0.1μ F,50V		
		CK733F1H104Z (A 5	+80/-20%	1	
C 91		CER CAP	0.1μ F,50V		
		CK733F1H104Z (A 5	+80/-20%	1	
C 92		CER CAP	0.1μ F,50V		
		CK733F1H104Z (A 5	+80/-20%	1	

Rev. No./Date | DESIGNED BY | CHECKED BY | APPROVED BY | Dep.

* : Selected at factory

DRAWING No. 44486746 4/11

No.D073-1988.11

ANRITSU CORP.

Parts List of: A6-A1 CPU

Ref. No.	Part Code	Description	Rating	Qty	Note
C 93		CER CAP	0.1μ F,50V		
		CK733F1H104Z (A 5	+80/-20%	1	
C 94		CER CAP	0.1μ F,50V		
		CK733F1H104Z (A 5	+80/-20%	1	
C 95		CER CAP	0.1μ F,50V		
		CK733F1H104Z (A 5	+80/-20%	1	
C 96		CER CAP	0.1μ F,50V		
		CK733F1H104Z (A 5	+80/-20%	1	
C 97		CER CAP	0.1μ F,50V		
		CK733F1H104Z (A 5	+80/-20%	1	
C 98		CER CAP	0.1μ F,50V		
		CK733F1H104Z (A 5	+80/-20%	1	
J 1		PLUG			
		DIN41612-90PB		1	
J 2		CABLE			
		HIF3H-60DA-2.54DSA		1	
J 3		PLUG			
		DIN41612-20PB		1	
J 4		PLUG			
		FFC3AMEP		1	
J 5		JACK			
		DIC-252		1	
J 6		PLUG			
		FFC3AMEP		1	
J 7		JACK			
		DIC-252		1	
L 1		INDUCTOR	22μ H,± 10%		
		LF8-220K		1	
L 2		INDUCTOR	22μ H,± 10%		
		LF8-220K		1	
L 3		INDUCTOR			
		SN5-300		1	
L 4		INDUCTOR	22μ H,± 10%		
		LF8-220K		1	
L 5		INDUCTOR	22μ H,± 10%		
		LF8-220K		1	
Q 1		IC			(64)
		MD68000P8		1	W/SOCKET

Rev. No./Date | DESIGNED BY | CHECKED BY | APPROVED BY | Dep.

* : Selected at factory

DRAWING No. 44486746 5/11

No.D073-1988.11

ANRITSU CORP.

Parts List of: A6-A1 CPU

Ref. No.	Part Code	Description	Rating	Qty	Note
Q 2		IC 74ALS161F		1	
Q 3		IC 74LS367AF		1	
Q 4		IC P8L16L8ACH		1	(20P) W/SOCKET
Q 5		NOT ASSIGNED			
Q 6		IC 74LS148F		1	
Q 7		IC 74ALS138F		1	
Q 8		IC 74ALS04BF		1	
Q 9		IC 74ALS00AF		1	
Q 10		IC 74ALS138F		1	
Q 11		IC 74ALS138F		1	
Q 12		IC 74ALS138F		1	
Q 13		IC 74ALS138F		1	
Q 14		IC 74LS123F		1	
Q 15		IC 74ALS74AF		1	
Q 16		IC 74ALS138F		1	
Q 17		IC 74ALS138F		1	
Q 18		IC	IC		
Q 19		74ALS138F NOT ASSIGNED		1	
Q 20		NOT ASSIGNED			
Q 21		IC 74ALS09F		1	
Q 22		IC 74ALS74AF		1	
Q 23		NOT ASSIGNED			
Q 24		IC 74ALS00AF		1	

Rev. No./Date | DESIGNED BY | CHECKED BY | APPROVED BY | Dep.

* : Selected at factory

DRAWING No. 44486746 6/11

No.0073-1986.11

ANRITSU CORP.

Parts List of: A6-A1 CPU

Ref. No.	Part Code	Description	Rating	Qty	Note
Q 25		IC 74ALS240AF		1	
Q 26		IC 74ALS240AF		1	
Q 27		IC MB14374M		1	
Q 28		IC MB14374M		1	
Q 29		IC 74ALS32F		1	
Q 30		IC 74ALS240AF		1	
Q 31		IC 74ALS05AF		1	
Q 32		IC 74ALS05AF		1	
Q 33		IC 74ALS32F		1	
Q 34		IC LH28RP		1	
Q 35		IC LH28RP		1	
Q 36		IC LH28RP		1	
Q 37		IC LH28RP		1	
Q 38		IC LH28RP		1	
Q 39		IC LH28RP		1	
Q 40		IC LH28RP		1	
Q 41		IC LH28RP		1	
Q 42		IC LH28RP		1	
Q 43		IC LH28RP		1	
Q 44		IC LH28RP		1	
Q 45		IC LH28RP		1	
Q 46		IC LH28RP		1	
Q 47		IC LH28RP		1	

Rev. No./Date | DESIGNED BY | CHECKED BY | APPROVED BY | Dep.

* : Selected at factory

DRAWING No. 44486746 7/11

No.0073-1986.11

ANRITSU CORP.

Parts List of: A6-A1 CPU

Ref. No.	Part Code	Description	Rating	Qty	Note
Q 48		IC 74ALS240AF		1	
Q 49		NOT ASSIGNED			
Q 50		IC 74HC00F		1	
Q 51		IC μ PD71054GB-384		1	
Q 52		IC RP5C15		1	
Q 53		IC μ PD71054GB-384		1	
Q 54		IC 74ALS04BF		1	
Q 55		IC EP ROM 128KX8-20C		1	W/SOCKET
Q 56		IC EP ROM 128KX8-20C		1	W/SOCKET
Q 57		NOT ASSIGNED			
Q 58		IC EP ROM 128KX8-20C		1	W/SOCKET
Q 59		IC EP ROM 128KX8-20C		1	W/SOCKET
Q 60		NOT ASSIGNED			
Q 61		IC SRAM32KX8CF		1	
Q 62		IC SRAM32KX8CF		1	
Q 63		IC SRAM32KX8CF		1	
Q 64		IC SRAM32KX8CF		1	
Q 65		DIODE 1S2837 (A5)		1	
Q 66		DIODE 1S2837 (A5)		1	
Q 67		NOT ASSIGNED			
Q 68		NOT ASSIGNED			
Q 69		IC 74LS645-1		1	
Q 70		IC 74LS645-1		1	

Rev. No./Date | DESIGNED BY | CHECKED BY | APPROVED BY | Dep.

* : Selected at factory

DRAWING No. 44486746 8/11

No.0073-1986.11

ANRITSU CORP.

Parts List of: A6-A1 CPU

Ref. No.	Part Code	Description	Rating	Qty	Note
Q 71		IC 74LS244F		1	
Q 72		IC 74LS367AF		1	
Q 73		IC 74LS164F		1	
Q 74		IC 74ALS30AF		1	
Q 75		IC 74ALS02F		1	
Q 76		IC 74ALS02F		1	
Q 77		IC 74ALS00AF		1	
Q 78		IC 74ALS15AF		1	
Q 79		IC 74ALS138F		1	
Q 80		IC 74LS645-1		1	
Q 81		IC 74HC00F		1	
Q 82		IC 74HC00F		1	
Q 83		IC 74HC00F		1	
Q 84		IC 74LS244F		1	
Q 85		IC 74LS244F		1	
Q 86		IC TL7700CPS		1	
Q 87		IC SRAM32KX8CF		1	
Q 88		IC SRAM32KX8CF		1	
Q 89		IC SRAM32KX8CF		1	
Q 90		IC SRAM32KX8CF		1	
Q 91		DIODE 1S953		1	
Q 92		DIODE 1S953		1	

Rev. No./Date | DESIGNED BY | CHECKED BY | APPROVED BY | Dep.

* : Selected at factory

DRAWING No. 44486746 9/11

No.0073-1986.11

ANRITSU CORP.

Parts List of: A6-A1 CPU

Ref. No.	Part Code	Description	Rating	Qty	Note
R 1	4486-04036	RES ARRAY	10KΩ		
		RRS-8-103JA	± 5%	1	
R 2	4486-04036	RES ARRAY	10KΩ		
		RRS-8-103JA	± 5%	1	
R 3		RES ARRAY			
		RRS-10-103JA		1	
R 4		RES ARRAY	10KΩ		
		RRS-4-103JA	± 5%	1	
R 5	4486-03834	RES ARRAY	10KΩ		
		RRS-6-103JA	± 5%	1	
R 6		NOT ASSIGNED			
R 7		CERMET RESISTOR	1.5KΩ		
		RK73M2A152J	± 5%,1/10W	1	
R 8		CERMET RESISTOR	3.3KΩ		
		RK73M2A332J	± 5%,1/10W	1	
R 9	4415-J0103	RES ARRAY	10KΩ		
		RRS-8-103JA	± 5%	1	
R 10		NOT ASSIGNED			
R 11	4486-03834	RES ARRAY	10KΩ		
		RRS-6-103JA	± 5%	1	
R 12		NOT ASSIGNED			
R 13		NOT ASSIGNED			
R 14		NOT ASSIGNED			
R 15		CERMET RESISTOR	10KΩ		
		RK73M2A103J	± 5%,1/10W	1	
R 16		NOT ASSIGNED			
R 17		RES ARRAY	470Ω		
		RRS-8-471JA	± 5%	1	
R 18		RES ARRAY	470Ω		
		RRS-6-471JA	± 5%	1	
R 19	4486-04036	RES ARRAY	10KΩ		
		RRS-8-103JA	± 5%	1	
R 20		CERMET RESISTOR	1KΩ		
		RK73M2A102J	± 5%,1/10W	1	
R 21		CERMET RESISTOR	1KΩ		
		RK73M2A102J	± 5%,1/10W	1	
R 22		CERMET RESISTOR	4.7KΩ		
		RK73M2A472J	± 5%,1/10W	1	
R 23		CERMET RESISTOR	1MΩ		
		RK73M2A105J	± 5%,1/10W	1	

Rev. No./Date | DESIGNED BY | CHECKED BY | APPROVED BY | Dep.

● : Selected at factory | DRAWING No. 44W86746 | 10/11

No.D073-1988.11

ANRITSU CORP.

Parts List of: A6-A1 CPU

Ref. No.	Part Code	Description	Rating	Qty	Note
R 24		NOT ASSIGNED			
R 25		NOT ASSIGNED			
R 26		METAL FILM RESISTOR	7.5KΩ		
		RN73G2A752D	± 0.5%,1/10W	1	
R 27		CERMET RESISTOR	1KΩ		
		RK73M2A102J	± 5%,1/10W	1	
R 28		CERMET RESISTOR	4.7KΩ		
		RK73M2A472J	± 5%,1/10W	1	
R 29		CERMET RESISTOR	4.7KΩ		
		RK73M2A472J	± 5%,1/10W	1	
R 30		CERMET RESISTOR	4.7KΩ		
		RK73M2A472J	± 5%,1/10W	1	
R 31		CERMET RESISTOR	4.7KΩ		
		RK73M2A472J	± 5%,1/10W	1	
R 32		CERMET RESISTOR	2.7KΩ		
		RK73M2A272J	± 5%,1/10W	1	
R 33		CERMET RESISTOR	4.7KΩ		
		RK73M2A472J	± 5%,1/10W	1	
R 34		CERMET RESISTOR	100Ω		
		RK73M2A101J	± 5%,1/10W	1	
R 35		CERMET RESISTOR	560Ω		
		RK73M2A561J	± 5%,1/10W	1	
R 36		CERMET RESISTOR	680Ω		
		RK73M2A681J	± 5%,1/10W	1	
S 1		SWITCH			
		ML21-NS		1	
S 2		SLIDE			
		DISS8A		1	
X 1		XTAL OSC			
		TCO-707F 16MHZ		1	
X 2		XTAL			
		MU-206S 32.768KHZ		1	
Z 1		BATTERY			
		BR-2/3AT2P		1	
Z 2		BATTERY			
		BR-2/3AT2P		1	

Rev. No./Date | DESIGNED BY | CHECKED BY | APPROVED BY | Dep.

● : Selected at factory | DRAWING No. 44W86746 | 11/11

No.D073-1988.11

ANRITSU CORP.

Parts List of: A6-A2 A/D CONVERTER 2/3

Ref. No.	Part Code	Description	Rating	Qty	Note
C 1		CER CAP	0.1μF,50V		
		CK733F1H104Z (A 5	+80/-20%	1	
C 2		CER CAP	0.1μF,50V		
		CK733F1H104Z (A 5	+80/-20%	1	
C 3		CER CAP	15p F		
		CC732CH1H150J (E b	± 5%,50V	1	
C 4		CER CAP			
		CC732CH1H102J		1	
C 5		CER CAP	0.1μF,50V		
		CK733F1H104Z (A 5	+80/-20%	1	
C 6		CER CAP	0.1μF,50V		
		CK733F1H104Z (A 5	+80/-20%	1	
C 7	2194-Y0105	AL ELECTLT CAP	1μF		
		CE04C1H010A	± 20%,50V	1	
C 8		PLSTC FILM CAP	47000p F		
		ECQ-V1H473JW	± 5%,50V	1	
C 9		NOT ASSIGNED			
C 10		NOT ASSIGNED			
C 11		NOT ASSIGNED			
C 12		NOT ASSIGNED			
C 13		NOT ASSIGNED			
C 14		NOT ASSIGNED			
C 15		NOT ASSIGNED			
C 16		NOT ASSIGNED			
C 17		CER CAP	0.1μF,50V		
		CK733F1H104Z (A 5	+80/-20%	1	
C 18		NOT ASSIGNED			
C 19		NOT ASSIGNED			
C 20		CER CAP	0.1μF,50V		
		CK733F1H104Z (A 5	+80/-20%	1	
C 21		CER CAP	0.1μF,50V		
		CK733F1H104Z (A 5	+80/-20%	1	
C 22		CER CAP	0.1μF,50V		
		CK733F1H104Z (A 5	+80/-20%	1	
C 23		CER CAP	0.1μF,50V		
		CK733F1H104Z (A 5	+80/-20%	1	

Rev. No./Date | DESIGNED BY H.Wakamatsu | CHECKED BY S. Nakagawa | APPROVED BY H. Tada | Dep.

● Selected at factory | DRAWING No. 44W87200 | 1/13

No.D073-1988.11

ANRITSU CORP.

Parts List of: A6-A2 A/D CONVERTER

Ref. No.	Part Code	Description	Rating	Qty	Note
C 24		CER CAP	0.1μF,50V		
		CK733F1H104Z (A 5	+80/-20%	1	
C 25		CER CAP	0.1μF,50V		
		CK733F1H104Z (A 5	+80/-20%	1	
C 26		CER CAP	0.1μF,50V		
		CK733F1H104Z (A 5	+80/-20%	1	
C 27		CER CAP			
		CC732CH1H102J		1	
C 28		CER CAP	0.1μF,50V		
		CK733F1H104Z (A 5	+80/-20%	1	
C 29		CER CAP	0.1μF,50V		
		CK733F1H104Z (A 5	+80/-20%	1	
C 30	2194-Y0105	AL ELECTLT CAP	1μF		
		CE04C1H010A	± 20%,50V	1	
C 31		CER CAP	0.1μF,50V		
		CK733F1H104Z (A 5	+80/-20%	1	
C 32		CER CAP	0.1μF,50V		
		CK733F1H104Z (A 5	+80/-20%	1	
C 33		CER CAP	220p F		
		CC732CH1H221J (J b	± 5%,50V	1	
C 34		CER CAP	220p F		
		CC732CH1H221J (J b	± 5%,50V	1	
C 35		CER CAP	0.1μF,50V		
		CK733F1H104Z (A 5	+80/-20%	1	
C 36		CER CAP	0.1μF,50V		
		CK733F1H104Z (A 5	+80/-20%	1	
C 37		CER CAP	0.1μF,50V		
		CK733F1H104Z (A 5	+80/-20%	1	
C 38	2192-Y0476	AL ELECTLT CAP	47μF		
		CE04C1E470A	± 20%,25V	1	
C 39	2192-Y0476	AL ELECTLT CAP	47μF		
		CE04C1E470A	± 20%,25V	1	
C 40		CER CAP	0.1μF,50V		
		CK733F1H104Z (A 5	+80/-20%	1	
C 41		CER CAP	0.1μF,50V		
		CK733F1H104Z (A 5	+80/-20%	1	
C 42	2192-Y0476	AL ELECTLT CAP	47μF		
		CE04C1E470A	± 20%,25V	1	
C 43	2192-Y0476	AL ELECTLT CAP	47μF		
		CE04C1E470A	± 20%,25V	1	
C 44	2179-Y0107	AL ELECTLT CAP	100μF		
		CE04C1A101A	± 20%,10V	1	
C 45		CER CAP	0.1μF,50V		
		CK733F1H104Z (A 5	+80/-20%	1	
C 46		CER CAP	0.1μF,50V		
		CK733F1H104Z (A 5	+80/-20%	1	

Rev. No./Date | DESIGNED BY | CHECKED BY | APPROVED BY | Dep.

● Selected at factory | DRAWING No. 44W87200 | 2/13

No.D073-1988.11

ANRITSU CORP.

Parts List of: A6-A2 A/D CONVERTER

Ref. No.	Part Code	Description	Rating	Qty	Note
C 47		CER CAP	0.1μ F,50V		
		CK733F1H104Z (A 5	+80/-20%	1	
C 48		NOT ASSIGNED			
C 49		CER CAP	100p F		
		CC732CH1H101J (A b	± 5%,50V	1	
C 50		CER CAP	0.1μ F,50V		
		CK733F1H104Z (A 5	+80/-20%	1	
C 51		CER CAP	0.1μ F,50V		
		CK733F1H104Z (A 5	+80/-20%	1	
C 52		CER CAP	0.1μ F,50V		
		CK733F1H104Z (A 5	+80/-20%	1	
C 53		CER CAP	0.1μ F,50V		
		CK733F1H104Z (A 5	+80/-20%	1	
C 54		CER CAP	0.1μ F,50V		
		CK733F1H104Z (A 5	+80/-20%	1	
C 55		CER CAP	0.1μ F,50V		
		CK733F1H104Z (A 5	+80/-20%	1	
C 56		CER CAP	0.1μ F,50V		
		CK733F1H104Z (A 5	+80/-20%	1	
C 57		CER CAP	0.1μ F,50V		
		CK733F1H104Z (A 5	+80/-20%	1	
C 58		CER CAP	0.1μ F,50V		
		CK733F1H104Z (A 5	+80/-20%	1	
C 59		CER CAP	0.1μ F,50V		
		CK733F1H104Z (A 5	+80/-20%	1	
C 60		CER CAP	0.1μ F,50V		
		CK733F1H104Z (A 5	+80/-20%	1	
C 61		CER CAP	0.1μ F,50V		
		CK733F1H104Z (A 5	+80/-20%	1	
C 62		CER CAP	0.1μ F,50V		
		CK733F1H104Z (A 5	+80/-20%	1	
C 63		CER CAP	0.1μ F,50V		
		CK733F1H104Z (A 5	+80/-20%	1	
C 64		CER CAP	0.1μ F,50V		
		CK733F1H104Z (A 5	+80/-20%	1	
C 65		CER CAP	0.1μ F,50V		
		CK733F1H104Z (A 5	+80/-20%	1	
C 66		CER CAP			
		CK733B1H104K		1	
C 67		CER CAP			
		CK733B1H104K		1	
C 68		CER CAP			
		CK733B1H104K		1	
C 69		NOT ASSIGNED			

○ : Selected at factory

DRAWING No. 44087200 3/13

No.D073-1988.11

ANRITSU CORP.

Parts List of: A6-A2 A/D CONVERTER

Ref. No.	Part Code	Description	Rating	Qty	Note
C 70		NOT ASSIGNED			
C 71		NOT ASSIGNED			
C 72		NOT ASSIGNED			
C 73		NOT ASSIGNED			
C 74		NOT ASSIGNED			
C 75		NOT ASSIGNED			
C 76		CER CAP	0.1μ F,50V		
		CK733F1H104Z (A 5	+80/-20%	1	
C 77		CER CAP	0.1μ F,50V		
		CK733F1H104Z (A 5	+80/-20%	1	
C 78		CER CAP	0.1μ F,50V		
		CK733F1H104Z (A 5	+80/-20%	1	
C 79		CER CAP	0.1μ F,50V		
		CK733F1H104Z (A 5	+80/-20%	1	
C 80		CER CAP	0.1μ F,50V		
		CK733F1H104Z (A 5	+80/-20%	1	
C 81		CER CAP	0.1μ F,50V		
		CK733F1H104Z (A 5	+80/-20%	1	
C 82		NOT ASSIGNED			
C 83		NOT ASSIGNED			
C 84		CER CAP	0.1μ F,50V		
		CK733F1H104Z (A 5	+80/-20%	1	
C 85		CER CAP	0.1μ F,50V		
		CK733F1H104Z (A 5	+80/-20%	1	
C 86		CER CAP	0.1μ F,50V		
		CK733F1H104Z (A 5	+80/-20%	1	
C 87		CER CAP	0.1μ F,50V		
		CK733F1H104Z (A 5	+80/-20%	1	
C 88		CER CAP	15p F		
		CC732CH1H150J (E b	± 5%,50V	1	
C 89		CER CAP	0.1μ F,50V		
		CK733F1H104Z (A 5	+80/-20%	1	
C 90		CER CAP	0.1μ F,50V		
		CK733F1H104Z (A 5	+80/-20%	1	
C 91		CER CAP	0.1μ F,50V		
		CK733F1H104Z (A 5	+80/-20%	1	
C 92		CER CAP			
		CC732CH1H102J		1	

○ : Selected at factory

DRAWING No. 44087200 4/13

No.D073-1988.11

ANRITSU CORP.

Parts List of: A6-A2 A/D CONVERTER

Ref. No.	Part Code	Description	Rating	Qty	Note
C 93		AL ELECTLT CAP	1μ F		
		CE04C1H010A	± 20%,50V	1	
C 94		CC732CH1H102J		1	
C 95		CER CAP	0.1μ F,50V		
		CK733F1H104Z (A 5	+80/-20%	1	
C 96		CER CAP	0.1μ F,50V		
		CK733F1H104Z (A 5	+80/-20%	1	
C 97		CER CAP	0.1μ F,50V		
		CK733F1H104Z (A 5	+80/-20%	1	
C 98		CER CAP	0.1μ F,50V		
		CK733F1H104Z (A 5	+80/-20%	1	
C 99		CER CAP	0.1μ F,50V		
		CK733F1H104Z (A 5	+80/-20%	1	
C 100		CER CAP	0.1μ F,50V		
		CK733F1H104Z (A 5	+80/-20%	1	
C 101		CER CAP	0.1μ F,50V		
		CK733F1H104Z (A 5	+80/-20%	1	
C 102		CER CAP	0.1μ F,50V		
		CK733F1H104Z (A 5	+80/-20%	1	
C 103		CER CAP	0.1μ F,50V		
		CK733F1H104Z (A 5	+80/-20%	1	
C 104		AL ELECTLT CAP	4.7μ F		
		CE04C1H4R7A	± 20%,50V	1	
C 105		NOT ASSIGNED			
C 106		CER CAP	0.1μ F,50V		
		CK733F1H104Z (A 5	+80/-20%	1	
C 107		CER CAP	0.1μ F,50V		
		CK733F1H104Z (A 5	+80/-20%	1	
J 1		PLUG	60P		
		MIF3M-60PB-2.54DSA		1	
J 2		RECEPTACLE			
		27DP-LR-PC		1	
J 3		RECEPTACLE			
		27DP-LR-PC		1	
L 1		INDUCTOR	22μ H		
		LF8-220K	± 10%	1	
L 2		INDUCTOR	22μ H		
		LF8-220K	± 10%	1	
L 3		INDUCTOR	22μ H		
		LF8-220K	± 10%	1	

○ : Selected at factory

DRAWING No. 44087200 5/13

No.D073-1988.11

ANRITSU CORP.

Parts List of: A6-A2 A/D CONVERTER

Ref. No.	Part Code	Description	Rating	Qty	Note
L 4		INDUCTOR	22μ H		
		LF8-220K	± 10%	1	
L 5		INDUCTOR	10μ H		
		LF8-100K	± 10%	1	
Q 1		IC			
		HA7-2525-5		1	
Q 2		IC			
		LF356BN		1	
Q 3		DIODE			
		1S2837 (A5)		1	
Q 4		DIODE			
		1SS97		1	
Q 5		DIODE			
		1SS97		1	
Q 6		IC			
		μ PD5200G		1	
Q 7		DIODE			
		1S2837 (A5)		1	
Q 8		IC			
		μ PD5201G		1	
Q 9		NOT ASSIGNED			
Q 10		NOT ASSIGNED			
Q 11		NOT ASSIGNED			
Q 12		NOT ASSIGNED			
Q 13		IC			
		LM833M		1	
Q 14		NOT ASSIGNED			
Q 15		NOT ASSIGNED			
Q 16		ZENER DIODE			
		RD6.2MB2 (622)		1	
Q 17		IC			W/SOCKET
		PALCE18V8Q-25PC/I		1	(20P)
Q 18		NOT ASSIGNED			
Q 19		NOT ASSIGNED			
Q 20		IC			
		μ PD5200G		1	

○ : Selected at factory

DRAWING No. 44087200 6/13

No.D073-1988.11

ANRITSU CORP.

Parts List of: A6-A2 A/D CONVERTER

Ref. No.	Part Code	Description	Rating	Qty	Note
Q 21		NOT ASSIGNED			
Q 22		IC			
		74LS74AF		1	
Q 23		IC			
		74HC374F		1	
Q 24		IC			
		74HC374F		1	
Q 25		IC			
		74HC374F		1	
Q 26		IC			
		74LS32F		1	
Q 27		IC			
		74HC153F		1	
Q 28		IC			
		74HC153F		1	
Q 29		IC			
		74HC157F		1	
Q 30		IC			
		74HC157F		1	
Q 31		IC			
		MC14555BP		1	
Q 32		IC			
		MI1-508-5		1	
Q 33		IC			
		MI1-508-5		1	
Q 34		IC			
		LF3568N		1	
Q 35		IC			
		μ PC649C		1	
Q 36		IC			
		ADC574AJ		1	
Q 37		IC			
		74HC76F		1	
Q 38		IC			
		74HC390F		1	
Q 39		IC			
		74HC151F		1	
Q 40		IC			
		74HC123F		1	
Q 41		IC			
		74ALS574F		1	
Q 42		IC			
		74ALS574F		1	
Q 43		IC			
		74HC76F		1	

Rev. No./Date | CHECKED BY | APPROVED BY | Dep.

* : Selected at factory

DRAWING No. 44087200 7/13

No.D073-1988.11

ANRITSU CORP.

Parts List of: A6-A2 A/D CONVERTER

Ref. No.	Part Code	Description	Rating	Qty	Note
Q 44		IC			
		74HC04F		1	
Q 45		IC			
		74HC00F		1	
Q 46		IC			
		74HC00F		1	
Q 47		IC			
		74HC00F		1	
Q 48		IC			
		74HC74F		1	
Q 49		NOT ASSIGNED			
Q 50		NOT ASSIGNED			
Q 51		NOT ASSIGNED			
Q 52		NOT ASSIGNED			
Q 53		NOT ASSIGNED			
Q 54		NOT ASSIGNED			
Q 55		NOT ASSIGNED			
Q 56		NOT ASSIGNED			
Q 57		NOT ASSIGNED			
Q 58		NOT ASSIGNED			
Q 59		DIODE			
		1S2837 (A5)		1	
Q 60		IC			
		74LS32F		1	
Q 61		IC			
		74LS74AF		1	
Q 62		IC			
		μ PD5200G		1	
Q 63		IC			
		μ PC4570G2		1	
Q 64		IC			
		MA7-2525-5		1	
Q 65		IC			
		LF3568N		1	
Q 66		DIODE			
		1S2837 (A5)		1	

Rev. No./Date | CHECKED BY | APPROVED BY | Dep.

* : Selected at factory

DRAWING No. 44087200 8/13

No.D073-1988.11

ANRITSU CORP.

Parts List of: A6-A2 A/D CONVERTER

Ref. No.	Part Code	Description	Rating	Qty	Note
Q 67		DIODE			
		1SS97		1	
Q 68		DIODE			
		1SS97		1	
Q 69		IC			
		μ PD5200G		1	
Q 70		IC			
		74LS123F		1	
Q 71		IC			
		74LS08F		1	
Q 72		IC			
		μ PC251G2		1	
Q 73		IC			
		DAC0832LCWM		1	
Q 74		IC			
		μ PC251G2		1	
Q 75		IC			
		NJM79L09A		1	
Q 76		IC			
		μ PC151G2		1	
R 1		CERMET RESISTOR	1KΩ		
		RK73M2A102J	± 5%,1/10W	1	
R 2		METAL FILM RESISTOR	1KΩ		
		RN73G2A102D	± 0.5%,1/10W	1	
R 3		VARIABLE RESISTOR	100Ω		
		RG0481Q1H	1/4W	1	*
R 4		CERMET RESISTOR	6.8KΩ		
		RK73M2A682J	± 5%,1/10W	1	
R 5		VARIABLE RESISTOR	20KΩ		
		RG0482Q3H	1/4W	1	*
R 6		CERMET RESISTOR	10KΩ		
		RK73M2A103J	± 5%,1/10W	1	
R 7		CERMET RESISTOR	1MΩ		
		RK73M2A105J	± 5%,1/10W	1	
R 8		CERMET RESISTOR	1MΩ		
		RK73M2A105J	± 5%,1/10W	1	
R 9		CERMET RESISTOR	1MΩ		
		RK73M2A105J	± 5%,1/10W	1	
R 10		CERMET RESISTOR	470Ω		
		RK73M2A471J	± 5%,1/10W	1	
R 11		CERMET RESISTOR	1KΩ		
		RK73M2A102J	± 5%,1/10W	1	
R 12		METAL FILM RESISTOR	5.6KΩ		
		RN73G2A562D	± 0.5%,1/10W	1	

Rev. No./Date | CHECKED BY | APPROVED BY | Dep.

* : Selected at factory

DRAWING No. 44087200 9/13

No.D073-1988.11

ANRITSU CORP.

Parts List of: A6-A2 A/D CONVERTER

Ref. No.	Part Code	Description	Rating	Qty	Note
R 13		METAL FILM RESISTOR	5.1KΩ		
		RN73G2AS12D	± 0.5%,1/10W	1	
R 14		CERMET RESISTOR	330KΩ		
		RK73M2A334J	± 5%,1/10W	1	
R 15		VARIABLE RESISTOR	20KΩ		
		RG0482Q3H	1/4W	1	*
R 16		CERMET RESISTOR	1KΩ		
		RK73M2A102J	± 5%,1/10W	1	
R 17		CERMET RESISTOR	1KΩ		
		RK73M2A102J	± 5%,1/10W	1	
R 18		CERMET RESISTOR	1KΩ		
		RK73M2A102J	± 5%,1/10W	1	
R 19		METAL FILM RESISTOR	1.2KΩ		
		RN73G2A122D	± 0.5%,1/10W	1	
R 20		CERMET RESISTOR	1KΩ		
		RK73M2A102J	± 5%,1/10W	1	
R 21		NOT ASSIGNED			
R 22		NOT ASSIGNED			
R 23		NOT ASSIGNED			
R 24		NOT ASSIGNED			
R 25		NOT ASSIGNED			
R 26		NOT ASSIGNED			
R 27		NOT ASSIGNED			
R 28		NOT ASSIGNED			
R 29		NOT ASSIGNED			
R 30		NOT ASSIGNED			
R 31		NOT ASSIGNED			
R 32		NOT ASSIGNED			
R 33		NOT ASSIGNED			
R 34		NOT ASSIGNED			
R 35		NOT ASSIGNED			

Rev. No./Date | CHECKED BY | APPROVED BY | Dep.

* : Selected at factory

DRAWING No. 44087200 10/13

No.D073-1988.11

ANRITSU CORP.

Parts List of: A6-A2 A/D CONVERTER

Ref. No.	Part Code	Description	Rating	Qty	Note
R 36		NOT ASSIGNED			
R 37		NOT ASSIGNED			
R 38		NOT ASSIGNED			
R 39		NOT ASSIGNED			
R 40		NOT ASSIGNED			
R 41		CERMET RESISTOR	1KΩ		
		RK73M2A102J	± 5%,1/10W	1	
R 42		VARIABLE RESISTOR	10KΩ		
		RG0481O3H	1/4W	1	*
R 43		METAL FILM RESISTOR	240-4.7K Ω		
		RN73G2A241-472D	± 0.5%,1/10W	1	*SHORT
R 44		NOT ASSIGNED			
R 45		VARIABLE RESISTOR	1KΩ		
		RG0481O2H	1/4W	1	*
R 46		METAL FILM RESISTOR	15KΩ		
		RN73G2A153D	± 0.5%,1/10W	1	
R 47		METAL FILM RESISTOR	4.7KΩ		
		RN73G2A472D	± 0.5%,1/10W	1	
R 48		METAL FILM RESISTOR	47Ω		
		RN73G2A47OD	± 0.5%,1/10W	1	
R 49		METAL FILM RESISTOR	47Ω		
		RN73G2A47OD	± 0.5%,1/10W	1	
R 50		CERMET RESISTOR	10KΩ		
		RK73M2A103J	± 5%,1/10W	1	
R 51		CERMET RESISTOR	10KΩ		
		RK73M2A103J	± 5%,1/10W	1	
R 52		NOT ASSIGNED			
R 53		CERMET RESISTOR	100Ω		
		RK73M2A101J	± 5%,1/10W	1	
R 54		CERMET RESISTOR	220Ω		
		RK73M2A221J	± 5%,1/10W	1	
R 55		CERMET RESISTOR	220Ω		
		RK73M2A221J	± 5%,1/10W	1	
R 56		CERMET RESISTOR	220Ω		
		RK73M2A221J	± 5%,1/10W	1	
R 57		NOT ASSIGNED			
R 58		NOT ASSIGNED			

Rev. No./Date | DESIGNED BY | CHECKED BY | APPROVED BY | Dep.

* : Selected at factory | DRAWING No. 44W87200 | 11/13

No.D073-1986.11

ANRITSU CORP.

Parts List of: A6-A2 A/D CONVERTER

Ref. No.	Part Code	Description	Rating	Qty	Note
R 59		NOT ASSIGNED			
R 60		NOT ASSIGNED			
R 61		CERMET RESISTOR	10KΩ		
		RK73M2A103J	± 5%,1/10W	1	
R 62		CERMET RESISTOR	1KΩ		
		RK73M2A102J	± 5%,1/10W	1	
R 63		CERMET RESISTOR	22KΩ		
		RK73M2A223J	± 5%,1/10W	1	
R 64		NOT ASSIGNED			
R 65		NOT ASSIGNED			
R 66		CERMET RESISTOR	330KΩ		
		RK73M2A334J	± 5%,1/10W	1	
R 67		VARIABLE RESISTOR	20KΩ		
		RG0482O3H	1/4W	1	*
R 68		CERMET RESISTOR	10KΩ		
		RK73M2A103J	± 5%,1/10W	1	
R 69		CERMET RESISTOR	1MΩ		
		RK73M2A105J	± 5%,1/10W	1	
R 70		CERMET RESISTOR	1MΩ		
		RK73M2A105J	± 5%,1/10W	1	
R 71		CERMET RESISTOR	1MΩ		
		RK73M2A105J	± 5%,1/10W	1	
R 72		CERMET RESISTOR	470Ω		
		RK73M2A471J	± 5%,1/10W	1	
R 73		CERMET RESISTOR	1KΩ		
		RK73M2A102J	± 5%,1/10W	1	
R 74		CERMET RESISTOR	10KΩ		
		RK73M2A103J	± 5%,1/10W	1	
R 75		CERMET RESISTOR	10KΩ		
		RK73M2A103J	± 5%,1/10W	1	
R 76		CERMET RESISTOR	10KΩ		
		RK73M2A103J	± 5%,1/10W	1	
R 77		CERMET RESISTOR	10KΩ		
		RK73M2A512J	± 5%,1/10W	1	
R 78		CERMET RESISTOR	100KΩ		
		RK73M2A104J	± 5%,1/10W	1	
R 79		CERMET RESISTOR	10KΩ		
		RK73M2A103J	± 5%,1/10W	1	
R 80		CERMET RESISTOR	470KΩ		
		RK73M2A474J	± 5%,1/10W	1	
R 81		NOT ASSIGNED			

Rev. No./Date | DESIGNED BY | CHECKED BY | APPROVED BY | Dep.

* : Selected at factory | DRAWING No. 44W87200 | 12/13

No.D073-1986.11

ANRITSU CORP.

Parts List of: A6-A2 A/D CONVERTER

Ref. No.	Part Code	Description	Rating	Qty	Note
R 82		NOT ASSIGNED			
R 83		NOT ASSIGNED			
R 84		NOT ASSIGNED			
R 85		NOT ASSIGNED			
R 86		NOT ASSIGNED			
R 87		NOT ASSIGNED			
R 88		CERMET RESISTOR	1.5KΩ		
		RK73M2A152J	± 5%,1/10W	1	
R 89		NOT ASSIGNED			
R 90		VARIABLE RESISTOR	100KΩ		
		RG0481O4H	1/4W	1	*
R 91		CERMET RESISTOR	100KΩ		
		RK73M2A104J	± 5%,1/10W	1	
R 92		CERMET RESISTOR	6.8KΩ		
		RK73M2A682J	± 5%,1/10W	2	
R 93		CERMET RESISTOR	10KΩ		
		RK73M2A103J	± 5%,1/10W	1	
R 94		CERMET RESISTOR	10KΩ		
		RK73M2A103J	± 5%,1/10W	1	
R 95		CERMET RESISTOR			
		RK73M2A203J		1	
R 96		CERMET RESISTOR	6.8KΩ		
		RK73M2A682J	± 5%,1/10W	1	
R 97		METAL FILM RESISTOR	10KΩ		
		RN73G2A103D	± 0.5%,1/10W	1	
R 98		METAL FILM RESISTOR	30KΩ		
		RN73G2A303D	± 0.5%,1/10W	1	
R 99		VARIABLE RESISTOR	10KΩ		
		RG0481O3H	1/4W	1	*

Rev. No./Date | DESIGNED BY | CHECKED BY | APPROVED BY | Dep.

* : Selected at factory | DRAWING No. 44W87200 | 13/13

No.D073-1986.11

ANRITSU CORP.

Parts List of: ME4510B 21
DMSA RX
A7 HORIZONTAL

Ref. No.	Part Code	Description	Rating	Qty	Note
C 1		CER CAP	1000p F		
		CK732B1H102K	± 10%,50V	1	
C 2		CER CAP	0.1μ F,50V		
		CK733F1H104Z	+80/-20%	1	
C 3		CER CAP	0.1μ F,50V		
		CK733F1H104Z	+80/-20%	1	
C 4		CER CAP	0.1μ F,50V		
		CK733F1H104Z	+80/-20%	1	
C 5		CER CAP	0.1μ F,50V		
		CK733F1H104Z	+80/-20%	1	
C 6		NOT ASSIGN			
C 7		NOT ASSIGN			
C 8		NOT ASSIGN			
C 9		CER CAP	0.1μ F,50V		
		CK733F1H104Z	+80/-20%	1	
C 10		CER CAP	0.1μ F,50V		
		CK733F1H104Z	+80/-20%	1	
C 11		CER CAP	0.1μ F,50V		
		CK733F1H104Z	+80/-20%	1	
C 12		CER CAP	0.1μ F,50V		
		CK733F1H104Z	+80/-20%	1	
C 13		CER CAP	0.1μ F,50V		
		CK733F1H104Z	+80/-20%	1	
C 14		CER CAP	0.1μ F,50V		
		CK733F1H104Z	+80/-20%	1	
C 15		NOT ASSIGN			
C 16		CER CAP	0.01μ F		
		CK732B1H103K	± 10%,50V	1	
C 17		CER CAP	0.1μ F,50V		
		CK733F1H104Z	+80/-20%	1	
C 18		CER CAP	0.1μ F,50V		
		CK733F1H104Z	+80/-20%	1	
C 19		CER CAP	0.1μ F,50V		
		CK733F1H104Z	+80/-20%	1	
C 20		CER CAP	0.1μ F,50V		
		CK733F1H104Z	+80/-20%	1	
C 21		CER CAP	1000p F		
		CK732B1H102K	± 10%,50V	1	
C 22		NOT ASSIGN			
C 23		CER CAP	0.1μ F,50V		
		CK733F1H104Z	+80/-20%	1	

Rev. No./Date | DESIGNED BY | CHECKED BY | APPROVED BY | Dep.

* : Selected at factory | DRAWING No. 44W86747 -11 | 1/22

No.D073-1986.11

ANRITSU CORP.

Ref. No.	Part Code	Description	Rating	Qty	Note
C 24		CER CAP	0.1μ F,50V		
		CK733F1H104Z	+80/-20%	1	
C 25		CER CAP	0.1μ F,50V		
		CK733F1H104Z	+80/-20%	1	
C 26		TA ELECTLT CAP	3.3μ F		
		CS732E1C335M	± 20%,16V	1	
C 27		TA ELECTLT CAP	3.3μ F		
		CS732E1C335M	± 20%,16V	1	
C 28		CER CAP	0.1μ F,50V		
		CK733F1H104Z	+80/-20%	1	
C 29		CER CAP	0.1μ F,50V		
		CK733F1H104Z	+80/-20%	1	
C 30		CER CAP	0.1μ F,50V		
		CK733F1H104Z	+80/-20%	1	
C 31		CER CAP	0.1μ F,50V		
		CK733F1H104Z	+80/-20%	1	
C 32		PLSTC FILM CAP	0.1μ F		
		ECQ-V1H104JW	± 5%,50V	1	
C 33		CER CAP	0.01μ F		
		CK732B1H103K	± 10%,50V	1	
C 34		CER CAP	1μ F,50V		
		CK737F1H105Z	+80/-20%	1	
C 35		CER CAP	1μ F,50V		
		CK737F1H105Z	+80/-20%	1	
C 36		TA ELECTLT CAP	47μ F		
		CS734E0J476M	± 20%,6.3V	1	
C 37		CER CAP	0.01μ F		
		CK732B1H103K	± 10%,50V	1	
C 38		AL ELECTLT CAP	47μ F		
		CE04C1E470A	± 20%,25V	1	
C 39		CER CAP	0.01μ F		
		CK732B1H103K	± 10%,50V	1	
C 40		CER CAP	0.1μ F,50V		
		CK733F1H104Z	+80/-20%	1	
C 41		CER CAP	0.1μ F,50V		
		CK733F1H104Z	+80/-20%	1	
C 42		TA ELECTLT CAP	47μ F		
		CS734E0J476M	± 20%,6.3V	1	
C 43		CER CAP	0.1μ F,50V		
		CK733F1H104Z	+80/-20%	1	
C 44		CER CAP	0.1μ F,50V		
		CK733F1H104Z	+80/-20%	1	
C 45		CER CAP	0.1μ F,50V		
		CK733F1H104Z	+80/-20%	1	
C 46		CER CAP	100p F		
		CC732CH1H101J	± 5%,50V	1	

Ref. No./Date

※: Selected at factory

DRAWING No. 44W86747 -11 2/22

© TEC 1993.07

ANRITSU CORP.

Ref. No.	Part Code	Description	Rating	Qty	Note
C 47		CER CAP	0.1μ F,50V		
		CK733F1H104Z	+80/-20%	1	
C 48		CER CAP	0.1μ F,50V		
		CK733F1H104Z	+80/-20%	1	
C 49		CER CAP	0.1μ F,50V		
		CK733F1H104Z	+80/-20%	1	
C 50		CER CAP	0.1μ F,50V		
		CK733F1H104Z	+80/-20%	1	
C 51		CER CAP	2p F,50V		
		CC732CK1H020C	± 0.25p F	1	
C 52		CER CAP	0.1μ F,50V		
		CK733F1H104Z	+80/-20%	1	
C 53		CER CAP	4700p F		
		CK732B1H472K	± 10%,50V	1	
C 54		CER CAP	0.1μ F,50V		
		CK733F1H104Z	+80/-20%	1	
C 55		CER CAP	0.1μ F,50V		
		CK733F1H104Z	+80/-20%	1	
C 56		CER CAP	0.1μ F,50V		
		CK733F1H104Z	+80/-20%	1	
C 57		CER CAP	22p F		
		CC92UB1H220JY	± 5%,50V	2	PARALLEL
C 58		NOT ASSIGN			
C 59		CER CAP	470p F		
		CC732CH1H471J	± 5%,50V	1	
C 60		NOT ASSIGN			
C 61		CER CAP	0.1μ F,50V		
		CK733F1H104Z	+80/-20%	1	
C 62		CER CAP	0.1μ F,50V		
		CK733F1H104Z	+80/-20%	1	
C 63		CER CAP	0.1μ F,50V		
		CK733F1H104Z	+80/-20%	1	
C 64		CER CAP	470p F		
		CC732CH1H471J	± 5%,50V	1	
C 65		CER CAP	470p F		
		CC732CH1H471J	± 5%,50V	1	
C 66		PLSTC FILM CAP	1800p F		
		ECQ-P1182FZ	± 1%,100V	1	
C 67		PLSTC FILM CAP	1200p F		
		ECQ-P1122FZ	± 1%,100V	1	
C 68		NOT ASSIGN			
C 69		NOT ASSIGN			

Ref. No./Date

※: Selected at factory

DRAWING No. 44W86747 -11 3/22

© TEC 1993.07

ANRITSU CORP.

Ref. No.	Part Code	Description	Rating	Qty	Note
C 70		PLSTC FILM CAP	1000p F		
		ECQ-P1102FZ	± 1%,100V	1	
C 71		CER CAP	680p F		
		RPE111CH681GS0	± 2%,50V	1	
C 72		CER CAP	33p F		
		CC732CH1H330J	± 5%,50V	1	
C 73		CER CAP	910p F		
		RPE111CH911GS0	± 2%,50V	1	PARALLEL
		CER CAP	36p F		
		CC924CH1H360J	± 5%,50V	2	PARALLEL
C 74		CER CAP	560p F		
		RPE111CH561GS0	± 2%,50V	1	
C 75		CER CAP	120p F		
		CC732CH1H121J	± 5%,50V	1	
C 76		PLSTC FILM CAP	1800p F		
		ECQ-P1182FZ	± 1%,100V	1	
C 77		PLSTC FILM CAP	1200p F		
		ECQ-P1122FZ	± 1%,100V	1	
C 78		NOT ASSIGN			
C 79		CER CAP	0.1μ F,50V		
		CK733F1H104Z	+80/-20%	1	
C 80		PLSTC FILM CAP	1000p F		
		ECQ-P1102FZ	± 1%,100V	1	
C 81		CER CAP	680p F		
		RPE111CH681GS0	± 2%,50V	1	
C 82		CER CAP	33p F		
		CC732CH1H330J	± 5%,50V	1	
C 83		CER CAP	910p F		
		RPE111CH911GS0	± 2%,50V	1	PARALLEL
		CER CAP	36p F		
		CC924CH1H360J	± 5%,50V	2	PARALLEL
C 84		CER CAP	560p F		
		RPE111CH561GS0	± 2%,50V	1	
C 85		CER CAP	120p F		
		CC732CH1H121J	± 5%,50V	1	
C 86		CER CAP	6800p F		
		CK732B1H682K	± 10%,50V	1	
C 87		CER CAP	0.1μ F,50V		
		CK733F1H104Z	+80/-20%	1	
C 88		CER CAP	0.1μ F,50V		
		CK733F1H104Z	+80/-20%	1	
C 89		CER CAP	0.1μ F,50V		
		CK733F1H104Z	+80/-20%	1	
C 90		CER CAP	0.1μ F,50V		
		CK733F1H104Z	+80/-20%	1	

Ref. No./Date

※: Selected at factory

DRAWING No. 44W86747 -11 4/22

© TEC 1993.07

ANRITSU CORP.

Ref. No.	Part Code	Description	Rating	Qty	Note
C 91		NOT ASSIGN			
C 92		NOT ASSIGN			
C 93		AL ELECTLT CAP	100μ F		
		CE04C1A101A	± 20%,10V	1	
C 94		AL ELECTLT CAP	100μ F		
		CE04C1A101A	± 20%,10V	1	
C 95		AL ELECTLT CAP	47μ F		
		CE04C1E470A	± 20%,25V	1	
C 96		AL ELECTLT CAP	47μ F		
		CE04C1E470A	± 20%,25V	1	
C 97		AL ELECTLT CAP	47μ F		
		CE04C1E470A	± 20%,25V	1	
C 98		AL ELECTLT CAP	47μ F		
		CE04C1E470A	± 20%,25V	1	
C 99		AL ELECTLT CAP	47μ F		
		CE04C1E470A	± 20%,25V	1	
C 100		AL ELECTLT CAP	47μ F		
		CE04C1E470A	± 20%,25V	1	
C 101		AL ELECTLT CAP	47μ F		
		CE04C1E470A	± 20%,25V	1	
C 102		AL ELECTLT CAP	47μ F		
		CE04C1E470A	± 20%,25V	1	
C 103		CER CAP	0.022μ F		
		CK733B1H223K	± 10%,50V	1	
C 104		CER CAP	0.022μ F		
		CK733B1H223K	± 10%,50V	1	
C 105		CER CAP	0.022μ F		
		CK733B1H223K	± 10%,50V	1	
C 106		CER CAP	0.1μ F,50V		
		CK733F1H104Z	+80/-20%	1	
C 107		CER CAP	0.1μ F,50V		
		CK733F1H104Z	+80/-20%	1	
C 108		CER CAP	0.1μ F,50V		
		CK733F1H104Z	+80/-20%	1	
C 109		CER CAP	0.1μ F,50V		
		CK733F1H104Z	+80/-20%	1	
C 110		CER CAP	0.1μ F,50V		
		CK733F1H104Z	+80/-20%	1	
C 111		AL ELECTLT CAP	47μ F		
		CE04C1E470A	± 20%,25V	1	
C 112		AL ELECTLT CAP	47μ F		
		CE04C1E470A	± 20%,25V	1	
C 113		AL ELECTLT CAP	100μ F		
		CE04C1A101A	± 20%,10V	1	

Ref. No./Date

※: Selected at factory

DRAWING No. 44W86747 -11 5/22

© TEC 1993.07

ANRITSU CORP.

Ref. No.	Part Code	Description	Rating	Qty	Note
C 114		AL ELECTLT CAP	47μ F		
		CE04C1E470A	± 20%.25V	1	
C 115		AL ELECTLT CAP	47μ F		
		CE04C1E470A	± 20%.25V	1	
C 116		CER CAP	0.1μ F.50V		
		CK733F1H104Z	+80/-20%	1	
C 117		CER CAP	0.1μ F.50V		
		CK733F1H104Z	+80/-20%	1	
C 118		CER CAP	0.1μ F.50V		
		CK733F1H104Z	+80/-20%	1	
C 119		CER CAP	0.1μ F.50V		
		CK733F1H104Z	+80/-20%	1	
C 120		NOT ASSIGN			
C 121		NOT ASSIGN			
C 122		AL ELECTLT CAP	47μ F		
		CE04C1E470A	± 20%.25V	1	
C 123		AL ELECTLT CAP	47μ F		
		CE04C1E470A	± 20%.25V	1	
C 124		NOT ASSIGN			
C 125		TA ELECTLT CAP	3.3μ F		
		CS732E1C335M	± 20%.16V	1	
C 126		TA ELECTLT CAP	3.3μ F		
		CS732E1C335M	± 20%.16V	1	
C 127		CER CAP	1000p F		
		CK732B1H102K	± 10%.50V	1	
C 128		CER CAP	1000p F		
		CK732B1H102K	± 10%.50V	1	
C 129		CER CAP	0.01μ F		
		CK732B1H103K	± 10%.50V	1	
C 130		CER CAP	0.1μ F.50V		
		CK733F1H104Z	+80/-20%	1	
C 131		CER CAP	0.1μ F.50V		
		CK733F1H104Z	+80/-20%	1	
C 132		NOT ASSIGN			
C 133		CER CAP	5p F.50V		
		CC732CH1H050D	± 0.5p F	1	
C 134		CER CAP	82p F		
		CC732CH1H820J	± 5%.50V	1	
C 135		CER CAP	180p F		
		CC732CH1H181J	± 5%.50V	1	
C 136		CER CAP	130p F		
		RPE111CH131G50	± 2%.50V	1	

*: Selected at factory

DRAWING No. 44W86747 -1 | 6/22

© ANRITSU 1993.07

ANRITSU CORP.

Ref. No.	Part Code	Description	Rating	Qty	Note
		CER CAP	68p F		
		CC732CH1H680J	± 5%.50V	1	PARALLEL
C 137		CER CAP	43p F		
		CC924CH1H430J	± 5%.50V	1	
C 138		NOT ASSIGN			
C 139		CER CAP	5p F.50V		
		CC732CH1H050D	± 0.5p F	1	
C 140		CER CAP	82p F		
		CC732CH1H820J	± 5%.50V	1	
C 141		CER CAP	180p F		
		CC732CH1H181J	± 5%.50V	1	
C 142		CER CAP	130p F		
		RPE111CH131G50	± 2%.50V	1	PARALLEL
		CER CAP	68p F		
		CC732CH1H680J	± 5%.50V	1	PARALLEL
C 143		CER CAP	43p F		
		CC924CH1H430J	± 5%.50V	1	
C 144		NOT ASSIGN			
C 145		AL ELECTLT CAP	47μ F		
		CE04C1E470A	± 20%.25V	1	
C 146		AL ELECTLT CAP	47μ F		
		CE04C1E470A	± 20%.25V	1	
C 147		AL ELECTLT CAP	47μ F		
		CE04C1E470A	± 20%.25V	1	
C 148		NOT ASSIGN			
C 149		AL ELECTLT CAP	2.2μ F		
		CE04C1H2R2A	± 20%.50V	1	
C 150		AL ELECTLT CAP	33μ F		
		CE04C1V330A	± 20%.35V	1	
C 151		NOT ASSIGN			
C 152		NOT ASSIGN			
C 153		CER CAP	0.1μ F.50V		
		CK733F1H104Z	+80/-20%	1	
C 154		CER CAP	0.1μ F.50V		
		CK733F1H104Z	+80/-20%	1	
C 155		CER CAP	0.1μ F.50V		
		CK733F1H104Z	+80/-20%	1	
C 156		CER CAP	0.1μ F.50V		
		CK733F1H104Z	+80/-20%	1	
C 157		CER CAP	0.1μ F.50V		
		CK733F1H104Z	+80/-20%	1	

*: Selected at factory

DRAWING No. 44W86747 -1 | 7/22

© ANRITSU 1993.07

ANRITSU CORP.

Ref. No.	Part Code	Description	Rating	Qty	Note
C 158		CER CAP	0.1μ F.50V		
		CK733F1H104Z	+80/-20%	1	
C 159		NOT ASSIGN			
C 160		CER CAP	0.1μ F.50V		
		CK733F1H104Z	+80/-20%	1	
C 161		CER CAP	0.1μ F.50V		
		CK733F1H104Z	+80/-20%	1	
C 162		CER CAP	0.1μ F.50V		
		CK733F1H104Z	+80/-20%	1	
C 163		CER CAP	0.1μ F.50V		
		CK733F1H104Z	+80/-20%	1	
C 164		CER CAP	1000p F		
		CK732B1H102K	± 10%.50V	1	
C 165		CER CAP	0.1μ F.50V		
		CK733F1H104Z	+80/-20%	1	
C 166		CER CAP	0.1μ F.50V		
		CK733F1H104Z	+80/-20%	1	
C 167		CER CAP	1000p F		
		CK732B1H102K	± 10%.50V	1	
C 168		CER CAP	0.1μ F.50V		
		CK733F1H104Z	+80/-20%	1	
C 169		CER CAP	0.1μ F.50V		
		CK733F1H104Z	+80/-20%	1	
C 170		CER CAP	0.1μ F.50V		
		CK733F1H104Z	+80/-20%	1	
C 171		CER CAP	0.1μ F.50V		
		CK733F1H104Z	+80/-20%	1	
C 172		CER CAP	0.1μ F.50V		
		CK733F1H104Z	+80/-20%	1	
C 173		CER CAP	0.1μ F.50V		
		CK733F1H104Z	+80/-20%	1	
C 174		CER CAP	0.1μ F.50V		
		CK733F1H104Z	+80/-20%	1	
C 175		CER CAP	0.1μ F.50V		
		CK733F1H104Z	+80/-20%	1	
C 176		CER CAP	0.1μ F.50V		
		CK733F1H104Z	+80/-20%	1	
C 177		CER CAP	0.1μ F.50V		
		CK733F1H104Z	+80/-20%	1	
C 178		CER CAP	0.1μ F.50V		
		CK733F1H104Z	+80/-20%	1	
C 179		CER CAP	4700p F		
		CK732B1H472K	± 10%.50V	1	
C 180		CER CAP	0.01μ F		
		CK732B1H103K	± 10%.50V	1	

*: Selected at factory

DRAWING No. 44W86747 -1 | 8/22

© ANRITSU 1993.07

ANRITSU CORP.

Ref. No.	Part Code	Description	Rating	Qty	Note
C 181		CER CAP	1000p F		
		CK732B1H102K	± 10%.50V	1	
C 182		NOT ASSIGN			
C 183		CER CAP	0.1μ F.50V		
		CK733F1H104Z	+80/-20%	1	
C 184		CER CAP	0.1μ F.50V		
		CK733F1H104Z	+80/-20%	1	
C 185		CER CAP	0.1μ F.50V		
		CK733F1H104Z	+80/-20%	1	
C 186		CER CAP	0.1μ F.50V		
		CK733F1H104Z	+80/-20%	1	
C 187		CER CAP	0.1μ F.50V		
		CK733F1H104Z	+80/-20%	1	
C 188		CER CAP	0.1μ F.50V		
		CK733F1H104Z	+80/-20%	1	
C 189		CER CAP	0.1μ F.50V		
		CK733F1H104Z	+80/-20%	1	
C 190		CER CAP	0.1μ F.50V		
		CK733F1H104Z	+80/-20%	1	
C 191		CER CAP	0.1μ F.50V		
		CK733F1H104Z	+80/-20%	1	
J 1					
J 2		DIN41612-90PB		1	
		JACK			
		27DP-LR-PC		1	
L 1		INDUCTOR			
		FS0810-471K		1	
L 2		INDUCTOR			
		FS0810-471K		1	
L 3		INDUCTOR			
		FS0810-471K		1	
L 4		NOT ASSIGN			
L 5		INDUCTOR	22μ H.± 10%		
		LF8-220K		1	
L 6		INDUCTOR	22μ H.± 10%		
		LF8-220K		1	
L 7		INDUCTOR	4.7μ H.± 10%		
		SP0408-4R7K			

*: Selected at factory

DRAWING No. 44W86747 -1 | 9/22

© ANRITSU 1993.07

ANRITSU CORP.

Ref. No.	Part Code	Description	Rating	Qty	Note
L 8		INDUCTOR	22μ H.± 10%		
		LF8-220K		1	
L 9		INDUCTOR	22μ H.± 10%		
		LF8-220K		1	
L 10		INDUCTOR	1.0mH.± 10%		
		NL453232-102K		1	
L 11		INDUCTOR	1.0mH.± 10%		
		NL453232-102K		1	
L 12					
		FS1012-272K		1	
L 13					
		FS1012-272K		1	
L 14		INDUCTOR	22μ H.± 10%		
		NL453232-220K		1	
Q 1		ZENER DIODE			
		RD5.1MB2		1	
Q 2		ZENER DIODE			
		RD6.2MB2		1	
Q 3					
		TC4052BF		1	
Q 4		IC			
		μ PC277G2		1	
Q 5		IC			
		74HC00F		1	
Q 6		IC			
		74HC04F		1	
Q 7		IC			
		74HC32F		1	
Q 8		IC			
		μ PD7011C		1	
Q 9		IC			
		74HC174F		1	
Q 10		IC			
		μ PC151G2		1	
Q 11		IC			
		74LS245F		1	
Q 12		IC			
		74LS245F		1	
Q 13		DIODE			
		1SS99		1	
Q 14		DIODE			
		1SS99		1	
Q 15		IC			
		74HC161F		1	

Rev. No/Date

※: Selected at factory

DRAWING No. 44W86747 -11 10/22

h TOZI 1993.07

ANRITSU CORP.

Ref. No.	Part Code	Description	Rating	Qty	Note
Q 16		IC			
		74HC161F		1	
Q 17		IC			
		74HC161F		1	
Q 18		IC			
		74HC161F		1	
Q 19		IC			
		μ PC848C		1	
Q 20		IC			
		μ PD5200G		1	
Q 21		IC			
		μ PC151G2		1	
Q 22		DIODE			
		1S252		1	
Q 23		DIODE			
		1S2835		1	
Q 24		DIODE			
		1S2835		1	
Q 25		IC			
		74HC374F		1	
Q 26		IC			
		74HC174F		1	
Q 27					
		AD7533KN		1	
Q 28		IC			
		μ PC454D		1	
Q 29		IC			
		μ PD5201G		1	
Q 30		ZENER DIODE			
		RD2.7MB		1	
Q 31		IC			
		μ PD5201G		1	
Q 32		IC			
		μ PC822G2		1	
Q 33		ZENER DIODE			
		RD2.7MB		1	
Q 34		IC			
		μ PC1555G2		1	
Q 35		IC			
		μ PC258G		1	
Q 36		IC			
		TC74HC123AF		1	
Q 37		IC			
		μ PD7011C		1	
Q 38		IC			
		μ PC822G2		1	

Rev. No/Date

※: Selected at factory

DRAWING No. 44W86747 -11 11/22

h TOZI 1993.07

ANRITSU CORP.

Ref. No.	Part Code	Description	Rating	Qty	Note
Q 39		IC			
		74HC161F		1	
Q 40		IC			
		74HC161F		1	
Q 41		IC			
		74HC161F		1	
Q 42		IC			
		EP ROM 32KX8-25C		1	
Q 43		IC			
		μ PD7011C		1	
Q 44		IC			
		74HC174F		1	
Q 45		IC			
		μ PC151G2		1	
Q 46		IC			
		74HC04F		1	
Q 47		IC			
		74HC00F		1	
Q 48		NOT ASSIGN			
Q 49		NOT ASSIGN			
Q 50					
		2SC3735		1	
Q 51		IC			
		74AS74F		1	
Q 52		IC			
		74LS293F		1	
Q 53		IC			
		TC74HC123AF		1	
Q 54					
		NE5534PS		1	
Q 55		IC			
		74HC174F		1	
Q 56		IC			
		TC4051BF		1	
Q 57		IC			
		TC4051BF		1	
Q 58		IC			
		μ PD5201G		1	
Q 59		IC			
		μ PC177G2		1	
Q 60		DIODE			
		1S2835		1	
Q 61					
		NE5534PS		1	

Rev. No/Date

※: Selected at factory

DRAWING No. 44W86747 -11 12/22

h TOZI 1993.07

ANRITSU CORP.

Ref. No.	Part Code	Description	Rating	Qty	Note
Q 62		IC			
		μ PC822G2		1	
Q 63		NOT ASSIGN			
Q 64		IC			
		μ PD5201G		1	
Q 65		IC			
		μ PC822G2		1	
Q 66		DIODE			
		1S2835		1	
Q 67		DIODE			
		1S2835		1	
Q 68		NOT ASSIGN			
Q 69		NOT ASSIGN			
Q 70		NOT ASSIGN			
Q 71		NOT ASSIGN			
Q 72		IC			
		74LS138F		1	
Q 73		IC			
		74HC174F		1	
Q 74		IC			
		74HC00F		1	
Q 75		IC			
		μ PD5201G		1	
Q 76		NOT ASSIGN			
Q 77		IC			
		74HC00F		1	
Q 78		IC			
		μ PC78L05		1	
Q 79					
		NJM79L05A		1	
Q 80		IC			
		μ PC78L08		1	
Q 81					
		NJM79L09A		1	
Q 82		DIODE			
		1S2835		1	
Q 83		ZENER DIODE			
		RD5.1MB2		1	
Q 84		NOT ASSIGN			

Rev. No/Date

※: Selected at factory

DRAWING No. 44W86747 -11 13/22

h TOZI 1993.07

ANRITSU CORP.

Ref. No.	Part Code	Description	Rating	Qty	Note
Q 85		ZENER DIODE RD2.7MB		1	
Q 86		ZENER DIODE RD2.7MB		1	
Q 87		IC μ PC821G2		1	
Q 88		IC μ PC177G2		1	
Q 89		IC μ PDS200G		1	
Q 90		DIODE 1S2835		1	
Q 91		IC 74HC74F		1	
Q 92		IC 74RC390F		1	
Q 93		IC 74RC00F		1	
Q 94		IC 74HC32F		1	
Q 95		IC 74HC04F		1	
Q 96		IC 74HC74F		1	
Q 97		IC 74HC74F		1	
Q 98		IC 74LS490F		1	
Q 99		IC 74LS490F		1	
Q 100		IC 74LS490F		1	
Q 101		IC 74HC08F		1	
Q 102		IC 74HC04F		1	
Q 103		IC 74HC74F		1	
Q 104		NOT ASSIGN			
Q 105					
Q 106		TC5032P IC 74HC148F		1	
Q 107		IC 74HC244F		1	

* Selected at factory

DRAWING No. 44W86747 -11 14/22

ANRITSU CORP.

Ref. No.	Part Code	Description	Rating	Qty	Note
Q 108		IC 74HC04F		1	
R 1		CERMET RESISTOR RK73M2A332J	3.3k Ω ± 5%.1/10W	1	
R 2		CERMET RESISTOR RK73M2A392J	3.9k Ω ± 5%.1/10W	1	
R 3		CERMET RESISTOR RK73M2A103J	10k Ω ± 5%.1/10W	1	
R 4		CERMET RESISTOR RK73M2A222J	2.2k Ω ± 5%.1/10W	1	
R 5		CERMET RESISTOR RK73M2A332J	3.3k Ω ± 5%.1/10W	1	
R 6		CERMET RESISTOR RK73M2A103J	10k Ω ± 5%.1/10W	1	
R 7		CERMET RESISTOR RK73M2A103J	10k Ω ± 5%.1/10W	1	
R 8		CERMET RESISTOR RK73M2A103J	10k Ω ± 5%.1/10W	1	
R 9		CERMET RESISTOR RK73M2A103J	10k Ω ± 5%.1/10W	1	
R 10		METAL FILM RESISTOR RN73G2A752D	7.5k Ω ± 0.5%.1/10W	1	
R 11		VARIABLE RESISTOR RG04B103H	10k Ω ± 20%.1/4W	1	*
R 12		VARIABLE RESISTOR RG04B104H	100k Ω ± 20%.1/4W	1	*
R 13		NOT ASSIGN			
R 14		NOT ASSIGN			
R 15		CERMET RESISTOR RK73M2A104J	100k Ω ± 5%.1/10W	1	
R 16		METAL FILM RESISTOR RN73G2A202D	2k Ω ± 0.5%.1/10W	1	
R 17		METAL FILM RESISTOR RN73G2A202D	2k Ω ± 0.5%.1/10W	1	
R 18		NOT ASSIGN			
R 19		METAL FILM RESISTOR RN73G2A512D	5.1k Ω ± 0.5%.1/10W	1	
R 20		METAL FILM RESISTOR RN73G2A562D	5.6k Ω ± 0.5%.1/10W	1	

* Selected at factory

DRAWING No. 44W86747 -11 15/22

ANRITSU CORP.

Ref. No.	Part Code	Description	Rating	Qty	Note
R 21		VARIABLE RESISTOR RG04B102H	1k Ω ± 20%.1/4W	1	*
R 22		CERMET RESISTOR RK73M2A821J	820Ω ± 5%.1/10W	1	
R 23		NOT ASSIGN			
R 24		VARIABLE RESISTOR RG04B203H	20k Ω ± 20%.1/4W	1	*
R 25		METAL FILM RESISTOR RN73G2A822D	8.2k Ω ± 0.5%.1/10W	1	
R 26		METAL FILM RESISTOR RN73G2A821D	820Ω ± 0.5%.1/10W	1	
R 27		METAL FILM RESISTOR RN73G2A910D	91Ω ± 0.5%.1/10W	1	
R 28		METAL FILM RESISTOR RN73G2A102D	1k Ω ± 0.5%.1/10W	1	
R 29		METAL FILM RESISTOR RN73G2A102D	1k Ω ± 0.5%.1/10W	1	
R 30		CERMET RESISTOR RK73M2A821J	820Ω ± 5%.1/10W	1	
R 31		CERMET RESISTOR RK73M2A101J	100Ω ± 5%.1/10W	1	
R 32		CERMET RESISTOR RK73M2A103J	10k Ω ± 5%.1/10W	1	
R 33		CERMET RESISTOR RK73M2A684J	680k Ω ± 5%.1/10W	1	
R 34		CERMET RESISTOR RK73M2A183J	18k Ω ± 5%.1/10W	1	
R 35		CERMET RESISTOR RK73M2A102J	1k Ω ± 5%.1/10W	1	
R 36		CERMET RESISTOR RK73M2A103J	10k Ω ± 5%.1/10W	1	
R 37		CERMET RESISTOR RK73M2A103J	10k Ω ± 5%.1/10W	1	
R 38		CERMET RESISTOR RK73M2A182J	1.8k Ω ± 5%.1/10W	1	
R 39		CERMET RESISTOR RK73M2A820J	82Ω ± 5%.1/10W	1	
R 40		CERMET RESISTOR RK73M2A103J	10k Ω ± 5%.1/10W	1	
R 41		CERMET RESISTOR RK73M2A103J	10k Ω ± 5%.1/10W	1	
R 42		CERMET RESISTOR RK73M2A102J	1k Ω ± 5%.1/10W	1	
R 43		CERMET RESISTOR RK73M2A223J	22k Ω ± 5%.1/10W	1	

* Selected at factory

DRAWING No. 44W86747 -11 16/22

ANRITSU CORP.

Ref. No.	Part Code	Description	Rating	Qty	Note
R 44		CERMET RESISTOR RK73M2A473J	47k Ω ± 5%.1/10W	1	
R 45		CERMET RESISTOR RK73M2A105J	1MΩ ± 5%.1/10W	1	
R 46		METAL FILM RESISTOR RN73G2A912D	9.1k Ω ± 0.5%.1/10W	1	
R 47		VARIABLE RESISTOR RG04B203H	20k Ω ± 20%.1/4W	1	*
R 48		CERMET RESISTOR RK73M2A104J	100k Ω ± 5%.1/10W	1	
R 49		CERMET RESISTOR RK73M2A104J	100k Ω ± 5%.1/10W	1	
R 50		CERMET RESISTOR RK73M2A104J	100k Ω ± 5%.1/10W	1	
R 51		CERMET RESISTOR RK73M2A682J	6.8k Ω ± 5%.1/10W	1	
R 52		CERMET RESISTOR RK73M2A223J	22k Ω ± 5%.1/10W	1	
R 53		CARBON FILM RES RK73M2A154J	150k Ω ± 5%.1/4W	1	
R 54		VARIABLE RESISTOR RG04B104H	100k Ω ± 20%.1/4W	1	*
R 55		CERMET RESISTOR RK73M2A223J	22k Ω ± 5%.1/10W	1	
R 56		CERMET RESISTOR RK73M2A103J	10k Ω ± 5%.1/10W	1	
R 57		CERMET RESISTOR RK73M2A102J	1k Ω ± 5%.1/10W	1	
R 58		METAL FILM RESISTOR RN73G2A202D	2k Ω ± 0.5%.1/10W	1	
R 59		METAL FILM RESISTOR RN73G2A202D	2k Ω ± 0.5%.1/10W	1	
R 60		METAL FILM RESISTOR RN73G2A202D	2k Ω ± 0.5%.1/10W	1	
R 61		METAL FILM RESISTOR RN73G2A202D	2k Ω ± 0.5%.1/10W	1	
R 62		METAL FILM RESISTOR RN73G2A133D	13k Ω ± 0.5%.1/10W	1	
R 63		VARIABLE RESISTOR RG04B501H	500Ω ± 20%.1/4W	1	*
R 64		VARIABLE RESISTOR RG04B104H	100k Ω ± 20%.1/4W	1	*
R 65		CERMET RESISTOR RK73M2A102J	1k Ω ± 5%.1/10W	1	
R 66		CERMET RESISTOR RK73M2A392J	3.9k Ω ± 5%.1/10W	1	

* Selected at factory

DRAWING No. 44W86747 -11 17/22

ANRITSU CORP.

Ref. No.	Part Code	Description	Rating	Qty	Note
R 67		CERMET RESISTOR	1k Ω		
		RK73M2A102J	± 5%,1/10W	1	
R 68		CERMET RESISTOR	2.2k Ω		
		RK73M2A222J	± 5%,1/10W	1	
R 69		CERMET RESISTOR	470Ω		
		RK73M2A471J	± 5%,1/10W	1	
R 70		METAL FILM RESISTOR	6.8k Ω		
		RN73G2A682D	± 0.5%,1/10W	1	
R 71		CERMET RESISTOR	100k Ω		
		RK73M2A104J	± 5%,1/10W	1	
R 72		VARIABLE RESISTOR	1k Ω		
		RG04B102H	± 20%,1/4W	1	•
R 73		CERMET RESISTOR	4.7k Ω		
		RK73M2A472J	± 5%,1/10W	1	
R 74		CERMET RESISTOR	4.7k Ω		
		RK73M2A472J	± 5%,1/10W	1	
R 75		CERMET RESISTOR	1MΩ		
		RK73M2A105J	± 5%,1/10W	1	
R 76		METAL FILM RESISTOR	5.1k Ω		
		RN73G2A512D	± 0.5%,1/10W	1	
R 77		CERMET RESISTOR	5.6k Ω		
		RK73M2A562J	± 5%,1/10W	1	
R 78		CERMET RESISTOR	22k Ω		
		RK73M2A223J	± 5%,1/10W	1	
R 79		CERMET RESISTOR	680Ω		
		RK73M2A681J	± 5%,1/10W	1	
R 80		NOT ASSIGN			
R 81		CERMET RESISTOR	33k Ω		
		RK73M2A333J	± 5%,1/10W	1	
R 82		CERMET RESISTOR	820Ω		
		RK73M2A821J	± 5%,1/10W	1	
R 83		CERMET RESISTOR	510Ω		
		RK73M2A511J	± 5%,1/10W	1	
R 84		CERMET RESISTOR	680k Ω		
		RK73M2A684J	± 5%,1/10W	1	
R 85		CERMET RESISTOR	680k Ω		
		RK73M2A684J	± 5%,1/10W	1	
R 86		VARIABLE RESISTOR	500k Ω		
		RJ6P500KΩ	± 20%,1/2W	1	•
R 87		CERMET RESISTOR	1MΩ		
		RK73M2A105J	± 5%,1/10W	1	
R 88		VARIABLE RESISTOR	500k Ω		
		RJ6P500KΩ	± 20%,1/2W	1	•
R 89		CERMET RESISTOR	120k Ω		
		RK73M2A124J	± 5%,1/10W	1	

• : Selected at factory

DRAWING No. 44MB6747 -11

ANRITSU CORP.

Ref. No.	Part Code	Description	Rating	Qty	Note
R 90		VARIABLE RESISTOR	20k Ω		
		RG04B203H	± 20%,1/4W	1	•
R 91		CERMET RESISTOR	1k Ω		
		RK73M2A102J	± 5%,1/10W	1	
R 92		CERMET RESISTOR	2.2k Ω		
		RK73M2A222J	± 5%,1/10W	1	
R 93		CERMET RESISTOR	1k Ω		
		RK73M2A102J	± 5%,1/10W	1	
R 94		CERMET RESISTOR	100k Ω		
		RK73M2A104J	± 5%,1/10W	1	
R 95		CERMET RESISTOR	1k Ω		
		RK73M2A102J	± 5%,1/10W	1	
R 96		CERMET RESISTOR	10k Ω		
		RK73M2A103J	± 5%,1/10W	1	
R 97		CERMET RESISTOR	1k Ω		
		RK73M2A102J	± 5%,1/10W	1	
R 98		CERMET RESISTOR	1k Ω		
		RK73M2A102J	± 5%,1/10W	1	
R 99		CERMET RESISTOR	10k Ω		
		RK73M2A103J	± 5%,1/10W	1	
R 100		CERMET RESISTOR	10k Ω		
		RK73M2A103J	± 5%,1/10W	1	
R 101		CERMET RESISTOR	1.2k Ω		
		RK73M2A122J	± 5%,1/10W	1	
R 102		CERMET RESISTOR	1k Ω		
		RK73M2A102J	± 5%,1/10W	1	
R 103		CERMET RESISTOR	47Ω		
		RK73M2A470J	± 5%,1/10W	1	
R 104		CERMET RESISTOR	390Ω		
		RK73M2A391J	± 5%,1/10W	1	
R 105		THERMISTOR	300Ω		
		0S-D5-300-1		1	
R 106		NOT ASSIGN			
R 107		NOT ASSIGN			
R 108		NOT ASSIGN			
R 109		NOT ASSIGN			
R 110		NOT ASSIGN			
R 111		NOT ASSIGN			
R 112		NOT ASSIGN			

• : Selected at factory

DRAWING No. 44MB6747 -11

ANRITSU CORP.

Ref. No.	Part Code	Description	Rating	Qty	Note
R 113		NOT ASSIGN			
R 114		NOT ASSIGN			
R 115		CERMET RESISTOR	10k Ω		
		RK73M2A103J	± 5%,1/10W	1	
R 116		CERMET RESISTOR	10k Ω		
		RK73M2A103J	± 5%,1/10W	1	
R 117		CERMET RESISTOR	22k Ω		
		RK73M2A223J	± 5%,1/10W	1	
R 118		CERMET RESISTOR	220k Ω		
		RK73M2A224J	± 5%,1/10W	1	
R 119		CERMET RESISTOR	10k Ω		
		RK73M2A103J	± 5%,1/10W	1	
R 120		CERMET RESISTOR	10k Ω		
		RK73M2A103J	± 5%,1/10W	1	
R 121		CERMET RESISTOR	10k Ω		
		RK73M2A103J	± 5%,1/10W	1	
R 122		CERMET RESISTOR	10k Ω		
		RK73M2A103J	± 5%,1/10W	1	
R 123		CERMET RESISTOR	47k Ω		
		RK73M2A473J	± 5%,1/10W	1	
R 124		CERMET RESISTOR	100k Ω		
		RK73M2A104J	± 5%,1/10W	1	
R 125		CERMET RESISTOR	27k Ω		
		RK73M2A273J	± 5%,1/10W	1	
R 126		CERMET RESISTOR	47k Ω		
		RK73M2A473J	± 5%,1/10W	1	
R 127		CERMET RESISTOR	10k Ω		
		RK73M2A103J	± 5%,1/10W	1	
R 128		VARIABLE RESISTOR	20k Ω		
		RG04B203H	± 20%,1/4W	1	•
R 129		CERMET RESISTOR	10k Ω		
		RK73M2A103J	± 5%,1/10W	1	
R 130		CERMET RESISTOR	47k Ω		
		RK73M2A473J	± 5%,1/10W	1	
R 131		VARIABLE RESISTOR	20k Ω		
		RG04B203H	± 20%,1/4W	1	•
R 132		VARIABLE RESISTOR	20k Ω		
		RG04B203H	± 20%,1/4W	1	•
R 133		CERMET RESISTOR	470k Ω		
		RK73M2A474J	± 5%,1/10W	1	
R 134		CERMET RESISTOR	680k Ω		
		RK73M2A684J	± 5%,1/10W	1	
R 135		NOT ASSIGN			

• : Selected at factory

DRAWING No. 44MB6747 -11

ANRITSU CORP.

Ref. No.	Part Code	Description	Rating	Qty	Note
R 136		NOT ASSIGN			
R 137		CERMET RESISTOR	33k Ω		
		RK73M2A333J	± 5%,1/10W	1	
R 138		METAL FILM RESISTOR	6.2k Ω		
		RN73G2A622D	± 0.5%,1/10W	1	
R 139		CERMET RESISTOR	100k Ω		
		RK73M2A104J	± 5%,1/10W	1	
R 140		NOT ASSIGN			
R 141		CERMET RESISTOR	47k Ω		
		RK73M2A473J	± 5%,1/10W	1	
R 142		CERMET RESISTOR	3.3k Ω		
		RK73M2A332J	± 5%,1/10W	1	
R 143		CERMET RESISTOR	15k Ω		
		RK73M2A153J	± 5%,1/10W	1	
R 144		METAL FILM RESISTOR	2k Ω		
		RN73G2A202D	± 0.5%,1/10W	1	
R 145		METAL FILM RESISTOR	2k Ω		
		RN73G2A202D	± 0.5%,1/10W	1	
R 146		METAL FILM RESISTOR	2k Ω		
		RN73G2A202D	± 0.5%,1/10W	1	
R 147		METAL FILM RESISTOR	5.1k Ω		
		RN73G2A512D	± 0.5%,1/10W	1	
R 148		METAL FILM RESISTOR	5.1k Ω		
		RN73G2A512D	± 0.5%,1/10W	1	
R 149		METAL FILM RESISTOR	18k Ω		
		RN73G2A183D	± 0.5%,1/10W	1	
R 150		METAL FILM RESISTOR	100k Ω		
		RN73G2A104D	± 0.5%,1/10W	1	
R 151		METAL FILM RESISTOR	2.2k Ω		
		RN73G2A222D	± 0.5%,1/10W	1	
R 152		METAL FILM RESISTOR	100k Ω		
		RN73G2A104D	± 0.5%,1/10W	1	
R 153		METAL FILM RESISTOR	2.2k Ω		
		RN73G2A222D	± 0.5%,1/10W	1	
R 154		METAL FILM RESISTOR	10k Ω		
		RN73G2A103D	± 0.5%,1/10W	1	
R 155		METAL FILM RESISTOR	1k Ω		
		RN73G2A102D	± 0.5%,1/10W	1	
R 156		METAL FILM RESISTOR	10k Ω		
		RN73G2A103D	± 0.5%,1/10W	1	
R 157		METAL FILM RESISTOR	10k Ω		
		RN73G2A103D	± 0.5%,1/10W	1	
R 158		NOT ASSIGN			

• : Selected at factory

DRAWING No. 44MB6747 -11

ANRITSU CORP.

Parts List of: ME4510B 22
DMSA RX
A8 CRT CONTROL

Ref. No.	Part Code	Description	Rating	Qty	Note
R 159		METAL FILM RESISTOR	100Ω		
		RN73G2A101D	± 0.5%,1/10W	1	
R 160		METAL FILM RESISTOR	2.2k Ω		
		RN73G2A222D	± 0.5%,1/10W	1	
R 161		NOT ASSIGN			
R 162		METAL FILM RESISTOR	1k Ω		
		RN73G2A102D	± 0.5%,1/10W	1	
R 163		CERMET RESISTOR	1k Ω		
		RK73M2A102J	± 5%,1/10W	1	
R 164		CERMET RESISTOR	1k Ω		
		RK73M2A102J	± 5%,1/10W	1	
R 165		CERMET RESISTOR	1k Ω		
		RK73M2A102J	± 5%,1/10W	1	
R 166		NOT ASSIGN			
R 167		NOT ASSIGN			
R 168		CERMET RESISTOR	1MΩ		
		RK73M2A105J	± 5%,1/10W	1	
R 169		CERMET RESISTOR	5.6k Ω		
		RK73M2A562J	± 5%,1/10W	1	
R 170		CERMET RESISTOR	5.6k Ω		
		RK73M2A562J	± 5%,1/10W	1	
R 171		NOT ASSIGN			
R 172		CERMET RESISTOR	4.7k Ω		
		RK73M2A472J	± 5%,1/10W	1	
R 173		CERMET RESISTOR	4.7k Ω		
		RK73M2A472J	± 5%,1/10W	1	
R 174		CERMET RESISTOR	680k Ω		
		RK73M2A684J	± 5%,1/10W	1	
R 175		NOT ASSIGN			
R 176		CARBON FILM RES	2.2k Ω		
		RD14D2E222J	± 5%,1/4W	1	
R 177		CARSON FILM RES	2.2k Ω		
		RD14D2E222J	± 5%,1/4W	1	
T 1		7K9-41MTC		1	
T 2		7K9-41MTC		1	

Drawing No. 44MB6747 -11 22/22

ANRITSU CORP.

Ref. No.	Part Code	Description	Rating	Qty	Note
C 1		CER CAP	0.1μ F,50V		
		CK733F1H104Z	+80/-20%	1	
C 2		CER CAP	0.1μ F,50V		
		CK733F1H104Z	+80/-20%	1	
C 3		CER CAP	0.1μ F,50V		
		CK733F1H104Z	+80/-20%	1	
C 4		CER CAP	0.1μ F,50V		
		CK733F1H104Z	+80/-20%	1	
C 5		CER CAP	0.1μ F,50V		
		CK733F1H104Z	+80/-20%	1	
C 6		CER CAP	0.1μ F,50V		
		CK733F1H104Z	+80/-20%	1	
C 7		CER CAP	0.1μ F,50V		
		CK733F1H104Z	+80/-20%	1	
C 8		CER CAP	0.1μ F,50V		
		CK733F1H104Z	+80/-20%	1	
C 9		CER CAP	0.1μ F,50V		
		CK733F1H104Z	+80/-20%	1	
C 10		CER CAP	0.1μ F,50V		
		CK733F1H104Z	+80/-20%	1	
C 11		CER CAP	0.1μ F,50V		
		CK733F1H104Z	+80/-20%	1	
C 12		CER CAP	0.1μ F,50V		
		CK733F1H104Z	+80/-20%	1	
C 13		CER CAP	0.1μ F,50V		
		CK733F1H104Z	+80/-20%	1	
C 14		CER CAP	0.1μ F,50V		
		CK733F1H104Z	+80/-20%	1	
C 15		CER CAP	0.1μ F,50V		
		CK733F1H104Z	+80/-20%	1	
C 16		CER CAP	0.1μ F,50V		
		CK733F1H104Z	+80/-20%	1	
C 17		CER CAP	0.1μ F,50V		
		CK733F1H104Z	+80/-20%	1	
C 18		CER CAP	0.1μ F,50V		
		CK733F1H104Z	+80/-20%	1	
C 19		CER CAP	0.1μ F,50V		
		CK733F1H104Z	+80/-20%	1	
C 20		CER CAP	0.1μ F,50V		
		CK733F1H104Z	+80/-20%	1	
C 21		CER CAP	0.1μ F,50V		
		CK733F1H104Z	+80/-20%	1	
C 22		CER CAP	0.1μ F,50V		
		CK733F1H104Z	+80/-20%	1	
C 23		CER CAP	0.1μ F,50V		
		CK733F1H104Z	+80/-20%	1	

Drawing No. 44MB6748 -11 1/6

ANRITSU CORP.

Ref. No.	Part Code	Description	Rating	Qty	Note
C 24		CER CAP	0.1μ F,50V		
		CK733F1H104Z	+80/-20%	1	
C 25		CER CAP	0.1μ F,50V		
		CK733F1H104Z	+80/-20%	1	
C 26		CER CAP	0.1μ F,50V		
		CK733F1H104Z	+80/-20%	1	
C 27		CER CAP	0.1μ F,50V		
		CK733F1H104Z	+80/-20%	1	
C 28		CER CAP	0.1μ F,50V		
		CK733F1H104Z	+80/-20%	1	
C 29		CER CAP	0.1μ F,50V		
		CK733F1H104Z	+80/-20%	1	
C 30		CER CAP	0.1μ F,50V		
		CK733F1H104Z	+80/-20%	1	
C 31		AL ELECTLT CAP	1μ F		
		CE04C1H010A	± 20%,50V	1	
C 32		AL ELECTLT CAP	1μ F		
		CE04C1H010A	± 20%,50V	1	
C 33		AL ELECTLT CAP	100μ F		
		CE04C1A101A	± 20%,10V	1	
C 34		NOT ASSIGN			
C 35		NOT ASSIGN			
C 36		CER CAP	0.1μ F,50V		
		CK733F1H104Z	+80/-20%	1	
C 37		CER CAP	0.1μ F,50V		
		CK733F1H104Z	+80/-20%	1	
C 38		AL ELECTLT CAP	47μ F		
		CE04C1E470A	± 20%,25V	1	
C 39		AL ELECTLT CAP	47μ F		
		CE04C1E470A	± 20%,25V	1	
C 40		AL ELECTLT CAP	100μ F		
		CE04C1A101A	± 20%,10V	1	
C 41		AL ELECTLT CAP	470μ F		
		SXE10VB-470M H15	± 20%,10V	1	
C 42		CER CAP	0.1μ F,50V		
		CK733F1H104Z	+80/-20%	1	
C 43		CER CAP	0.1μ F,50V		
		CK733F1H104Z	+80/-20%	1	
C 44		CER CAP	0.1μ F,50V		
		CK733F1H104Z	+80/-20%	1	
C 45		CER CAP	0.1μ F,50V		
		CK733F1H104Z	+80/-20%	1	
C 46		CER CAP	0.1μ F,50V		
		CK733F1H104Z	+80/-20%	1	

Drawing No. 44MB6748 -11 2/6

ANRITSU CORP.

Ref. No.	Part Code	Description	Rating	Qty	Note
C 47		CER CAP	0.1μ F,50V		
		CK733F1H104Z	+80/-20%	1	
C 48		CER CAP	0.1μ F,50V		
		CK733F1H104Z	+80/-20%	1	
C 49		CER CAP	0.1μ F,50V		
		CK733F1H104Z	+80/-20%	1	
C 50		CER CAP	0.1μ F,50V		
		CK733F1H104Z	+80/-20%	1	
C 51		CER CAP	0.1μ F,50V		
		CK733F1H104Z	+80/-20%	1	
C 52		CER CAP	0.1μ F,50V		
		CK733F1H104Z	+80/-20%	1	
C 53		CER CAP	0.1μ F,50V		
		CK733F1H104Z	+80/-20%	1	
C 54		CER CAP	0.1μ F,50V		
		CK733F1H104Z	+80/-20%	1	
C 55		CER CAP	0.1μ F,50V		
		CK733F1H104Z	+80/-20%	1	
C 56		CER CAP	0.1μ F,50V		
		CK733F1H104Z	+80/-20%	1	
C 57		CER CAP	0.1μ F,50V		
		CK733F1H104Z	+80/-20%	1	
C 58		CER CAP	0.1μ F,50V		
		CK733F1H104Z	+80/-20%	1	
C 59		CER CAP	0.1μ F,50V		
		CK733F1H104Z	+80/-20%	1	
C 60		CER CAP	0.1μ F,50V		
		CK733F1H104Z	+80/-20%	1	
C 61		CER CAP	0.1μ F,50V		
		CK733F1H104Z	+80/-20%	1	
J 1		PLUG	90P		
		DIN41612-90PB		1	
L 1		INDUCTOR	100μ H		
		LF8-101K	± 10%	1	
L 2		INDUCTOR			
		SN-5-300		1	
Q 1		HD63484P8			

Drawing No. 44MB6748 -11 3/6

ANRITSU CORP.

Ref. No.	Part Code	Description	Rating	Qty	Note
Q 2		HD63485PS32		1	
Q 3		IC 74AS02F		1	
Q 4		HD63486PS32		1	
Q 5		HD63486PS32		1	
Q 6		MSM51C464AZS-10		1	
Q 7		MSM51C464AZS-10		1	
Q 8		MSM51C464AZS-10		1	
Q 9		MSM51C464AZS-10		1	
Q 10		MSM51C464AZS-10		1	
Q 11		MSM51C464AZS-10		1	
Q 12		MSM51C464AZS-10		1	
Q 13		MSM51C464AZS-10		1	
Q 14		MSM51C464AZS-10		1	
Q 15		MSM51C464AZS-10		1	
Q 16		MSM51C464AZS-10		1	
Q 17		MSM51C464AZS-10		1	
Q 18		MSM51C464AZS-10		1	
Q 19		MSM51C464AZS-10		1	
Q 20		MSM51C464AZS-10		1	
Q 21		MSM51C464AZS-10		1	
Q 22		74HC174F		1	
Q 23		µ PD6326C		1	
Q 24		DA-6PC		1	

*: Selected at factory DRAWING No. 44W86748 -11 4/6

ANRITSU CORP.

Ref. No.	Part Code	Description	Rating	Qty	Note
Q 25		DA-6PC		1	
Q 26		2SC3735		1	
Q 27		IC 7407		1	
Q 28		IC 7404		1	
Q 29		74128		1	
Q 30		IC 74LS27F		1	
Q 31		IC 74LS12		1	
Q 32		74LS32F		1	
Q 33		74LS645-1		1	
Q 34		74LS645-1		1	
Q 35		74LS08F		1	
Q 36		IC 7407		1	
Q 37		74LS04F		1	
Q 38		74LS27F		1	
Q 39		74AS74F		1	
Q 40		IC µ PC78L05J		1	
Q 41		74128		1	
Q 42		74128		1	
Q 43		ZENER DIODE RD3.9EB		1	
R 1		CERMET RESISTOR RK73M2A472J	4.7k Ω ± 5%,1/10W	1	
R 2		CERMET RESISTOR RK73M2A472J	4.7k Ω ± 5%,1/10W	1	
R 3		RES ARRAY RRS-4-102JB	1k Ω ± 5%,1/8W	1	

*: Selected at factory DRAWING No. 44W86748 -11 5/6

ANRITSU CORP.

Ref. No.	Part Code	Description	Rating	Qty	Note
R 4		RES ARRAY RRS-4-102JB	1k Ω ± 5%,1/8W	1	
R 5					*SHORT
R 6		VARIABLE RESISTOR RG04B501V	500Ω ± 20%,1/4W	1	*
R 7		CERMET RESISTOR RK73M2A221J	220Ω ± 5%,1/10W	1	
R 8		CERMET RESISTOR RK73M2A221J	220Ω ± 5%,1/10W	1	
R 9		RES ARRAY RRS-4-510JB	51Ω ± 5%,1/8W	1	
R 10		CERMET RESISTOR RK73M2A152J	1.5k Ω ± 5%,1/10W	1	
R 11		CERMET RESISTOR RK73M2A101J	100Ω ± 5%,1/10W	1	
R 12		CERMET RESISTOR RK73M2A101J	100Ω ± 5%,1/10W	1	
R 13		CERMET RESISTOR RK73M2A102J	1k Ω ± 5%,1/10W	1	
R 14		NOT ASSIGN			
R 15		CERMET RESISTOR RK73M2A331J	330Ω ± 5%,1/10W	1	
R 16		CERMET RESISTOR RK73M2A562J	5.6k Ω ± 5%,1/10W	1	
R 17		VARIABLE RESISTOR RG04B104V	100k Ω ± 20%,1/4W	1	*
R 18		NOT ASSIGN			
R 19		CERMET RESISTOR RK73M2A102J	1k Ω ± 5%,1/10W	1	
R 20		CERMET RESISTOR RK73M2A102J	1k Ω ± 5%,1/10W	1	
X 1		OSC-1A-28MHz	28MHz	1	

*: Selected at factory DRAWING No. 44W86748 -11 6/6

ANRITSU CORP.

Parts List of: A9 FRONT BOARD 23

Ref. No.	Part Code	Description	Rating	Qty	Note
C 1	2194-Y0105	AL ELECTLT CAP CE04C1H010A	1µ F ± 20%,50V	1	
C 2		CER CAP CK733F1H104Z (A 5	0.1µ F,50V +80/-20%	1	
C 3		CER CAP CK733F1H104Z (A 5	0.1µ F,50V +80/-20%	1	
C 4		CER CAP CK733F1H104Z (A 5	0.1µ F,50V +80/-20%	1	
C 5		NOT ASSIGNED			
C 6		CER CAP CK733F1H104Z (A 5	0.1µ F,50V +80/-20%	1	
C 7		CER CAP CK733F1H104Z (A 5	0.1µ F,50V +80/-20%	1	
C 8		NOT ASSIGNED			
C 9		AL ELECTLT CAP CE04C1H470A	47µ F ± 20%,50V	1	
C 10		CER CAP CK733F1H104Z (A 5	0.1µ F,50V +80/-20%	1	
C 11		CER CAP CK732B1H102K (A 3	1000p F ± 10%,50V	1	
C 12		CER CAP CK733F1H104Z (A 5	0.1µ F,50V +80/-20%	1	
C 13		CER CAP CK733F1H104Z (A 5	0.1µ F,50V +80/-20%	1	
C 14		CER CAP CK733F1H104Z (A 5	0.1µ F,50V +80/-20%	1	
C 15		CER CAP CK733F1H104Z (A 5	0.1µ F,50V +80/-20%	1	
C 16		CER CAP CK733F1H104Z (A 5	0.1µ F,50V +80/-20%	1	
C 17		CER CAP CK733F1H104Z (A 5	0.1µ F,50V +80/-20%	1	
C 18		CER CAP CK733F1H104Z (A 5	0.1µ F,50V +80/-20%	1	
J 1		CABLE CNF23-300AA030S		1	
J 2		PLUG DF1-10P2.50SA	10P	1	

* Selected at factory DRAWING No. 44W86749 1/7

ANRITSU CORP.

Parts List of: A9 FRONT BOARD

Ref. No.	Part Code	Description	Rating	Qty	Note
Q 1		IC μ PD8279C-2		1	
Q 2		IC 74LS04F		1	
Q 3		IC 74HC138F		1	
Q 4		NOT ASSIGNED			
Q 5		IC TD62305F		1	
Q 6		IC TD62706F		1	
Q 7		IC 74LS645-1		1	
Q 8		NOT ASSIGNED			
Q 9		NOT ASSIGNED			
Q 10		NOT ASSIGNED			
Q 11		NOT ASSIGNED			
Q 12		NOT ASSIGNED			
Q 13		NOT ASSIGNED			
Q 14		NOT ASSIGNED			
Q 15		LED TLG226		1	
Q 16		LED TLG226		1	
Q 17		LED TLG226		1	
Q 18		NOT ASSIGNED			
Q 19		NOT ASSIGNED			
Q 20		IC 74HC74F		1	
Q 21		IC TC74HC123AF		1	
Q 22		IC 74HC00F		1	
Q 23		NOT ASSIGNED			

Rev. No./Date | DESIGNED BY | APPROVED BY | CHECKED BY | Dep.

* : Selected at factory

DRAWING No. 44086749 277

No.0073-1986.11

ANRITSU CORP.

Parts List of: A9 FRONT BOARD

Ref. No.	Part Code	Description	Rating	Qty	Note
Q 24		NOT ASSIGNED			
Q 25		NOT ASSIGNED			
Q 26		IC 74HC14F		1	
Q 27		IC 74HC00F		1	
Q 28		PHOTP COUPLER GL480M		1	
Q 29		PHOTO COUPLER GL480M		1	
Q 30		PHOTO COUPLER PT480M		1	
Q 31		PHOTO COUPLER PT480M		1	
Q 32		IC μ PC277G2		1	
Q 33		IC DA-6PC		1	
Q 34		DIODE 1S2837 (AS)		1	
Q 35		IC DA-6PC		1	
Q 36		DIODE 1S2837 (AS)		1	
Q 37		IC DA-6PC		1	
Q 38		IC DA-6PC		1	
Q 39		DIODE 1S2837 (AS)		1	
Q 40		IC DA-6PC		1	
Q 41		DIODE 1S2837 (AS)		1	
Q 42		IC DA-6PC		1	
R 1		METAL FILM RESISTOR RN73G2A680D	68Ω ± 0.5%.1/10W	1	
R 2		METAL FILM RESISTOR RN73G2A680D	68Ω ± 0.5%.1/10W	1	
R 3		METAL FILM RESISTOR RN73G2A680D	68Ω ± 0.5%.1/10W	1	

Rev. No./Date | DESIGNED BY | APPROVED BY | CHECKED BY | Dep.

* : Selected at factory

DRAWING No. 44086749 377

No.0073-1986.11

ANRITSU CORP.

Parts List of: A9 FRONT BOARD

Ref. No.	Part Code	Description	Rating	Qty	Note
R 4		METAL FILM RESISTOR RN73G2A680D	68Ω ± 0.5%.1/10W	1	
R 5		NOT ASSIGNED			
R 6		NOT ASSIGNED			
R 7		NOT ASSIGNED			
R 8		NOT ASSIGNED			
R 9		NOT ASSIGNED			
R 10		METAL FILM RESISTOR RN73G2A1003D	10KΩ ± 0.5%.1/10W	1	
R 11		NOT ASSIGNED			
R 12		NOT ASSIGNED			
R 13		NOT ASSIGNED			
R 14		NOT ASSIGNED			
R 15		METAL FILM RESISTOR RN73G2A3310	330Ω ± 0.5%.1/10W	1	
R 16		METAL FILM RESISTOR RN73G2A2210	220Ω ± 0.5%.1/10W	1	
R 17		METAL FILM RESISTOR RN73G2A102D	1KΩ ± 0.5%.1/10W	1	
R 18		METAL FILM RESISTOR RN73G2A102D	1KΩ ± 0.5%.1/10W	1	
R 19		METAL FILM RESISTOR RN73G2A562D	5.6KΩ ± 0.5%.1/10W	1	
R 20		METAL FILM RESISTOR RN73G2A562D	5.6KΩ ± 0.5%.1/10W	1	
R 21		METAL FILM RESISTOR RN73G2A123D	12KΩ ± 0.5%.1/10W	1	
R 22		METAL FILM RESISTOR RN73G2A222D	2.2KΩ ± 0.5%.1/10W	1	
R 23		METAL FILM RESISTOR RN73G2A103D	10KΩ ± 0.5%.1/10W	1	
R 24		METAL FILM RESISTOR RN73G2A153D	15KΩ ± 0.5%.1/10W	1	
R 25		METAL FILM RESISTOR RN73G2A123D	12KΩ ± 0.5%.1/10W	1	
R 26		METAL FILM RESISTOR RN73G2A222D	2.2KΩ ± 0.5%.1/10W	1	

Rev. No./Date | DESIGNED BY | APPROVED BY | CHECKED BY | Dep.

* : Selected at factory

DRAWING No. 44086749 477

No.0073-1986.11

ANRITSU CORP.

Parts List of: A9 FRONT BOARD

Ref. No.	Part Code	Description	Rating	Qty	Note
R 27		METAL FILM RESISTOR RN73G2A103D	10KΩ ± 0.5%.1/10W	1	
R 28		METAL FILM RESISTOR RN73G2A153D	15KΩ ± 0.5%.1/10W	1	
S 1		SWITCH HL20-NS		1	
S 2		SWITCH HL20-NS		1	
S 3		SWITCH HL20-NS		1	
S 4		SWITCH HL20-NS		1	
S 5		SWITCH HL20-NS		1	
S 6		SWITCH HL20-NS		1	
S 7		SWITCH HL20-NS		1	
S 8		NOT ASSIGNED			
S 9		SWITCH HL21-LSYG		1	
S 10		SWITCH HL21-LSYG		1	
S 11		SWITCH HL21-LSYG		1	
S 12		SWITCH HL21-LSYG		1	
S 13		SWITCH HL21-LSYG		1	
S 14		NOT ASSIGNED			
S 15		NOT ASSIGNED			
S 16		SWITCH M85A-ON001		1	
S 17		NOT ASSIGNED			
S 18		NOT ASSIGNED			
S 19		SWITCH M85A-ON001		1	
S 20		NOT ASSIGNED			

Rev. No./Date | DESIGNED BY | APPROVED BY | CHECKED BY | Dep.

* : Selected at factory

DRAWING No. 44086749 577

No.0073-1986.11

ANRITSU CORP.

Parts List of: A9 FRONT BOARD

Ref. No.	Part Code	Description	Rating	Qty	Note
S 21		NOT ASSIGNED			
S 22		SWITCH M85A-0N001		1	
S 23		SWITCH M85A-0N001		1	
S 24		SWITCH M85A-0N001		1	
S 25		SWITCH M85A-0N001		1	
S 26		NOT ASSIGNED			
S 27		NOT ASSIGNED			
S 28		NOT ASSIGNED			
S 29		NOT ASSIGNED			
S 30		NOT ASSIGNED			
S 31		SWITCH M85A-0N001		1	
S 32		SWITCH M85A-0N001		1	
S 33		SWITCH M85A-0N001		1	
S 34		SWITCH M85A-0N001		1	
S 35		SWITCH M85A-0N001		1	
S 36		SWITCH M85A-0N001		1	
S 37		SWITCH M85A-0N001		1	
S 38		SWITCH M85A-0N001		1	
S 39		SWITCH M85A-0N001		1	
S 40		SWITCH M85A-0N001		1	
S 41		SWITCH M85A-0N001		1	
S 42		SWITCH M85A-0N001		1	
S 43		SWITCH M85A-0N001		1	

Rev. No./Date | DESIGNED BY | DRAWN BY | CHECKED BY | APPROVED BY | Dep.

◇ : Selected at factory | DRAWING No. 44W86749 | 6/7

No.D073-1988.11 | ANRITSU CORP.

Parts List of: A9 FRONT BOARD

Ref. No.	Part Code	Description	Rating	Qty	Note
S 44		SWITCH M85A-0N001		1	
S 45		SWITCH M85A-0N001		1	
S 46		SWITCH M85A-0N001		1	
S 47		SWITCH M85A-0N001		1	
S 48		NOT ASSIGNED			
S 49		NOT ASSIGNED			
S 50		SWITCH HL21-NS		1	
S 51		SWITCH M85A-0N001		1	
Z 1		ENCODER MRE-30S		1	
Z 2		BUZZER PKB8-4A0		1	

Rev. No./Date | DESIGNED BY | DRAWN BY | CHECKED BY | APPROVED BY | Dep.

◇ : Selected at factory | DRAWING No. 44W86749 | 7/7

No.D073-1988.11 | ANRITSU CORP.

Parts List of: A10 LED BOARD 24

Ref. No.	Part Code	Description	Rating	Qty	Note
J 1		PLUG DF1-10P2.5DSA	10P	1	
Q 1		LED LN342GPH		1	
Q 2		LED LN442YPH		1	
Q 3		DIODE 1S2837 (AS)		1	
Q 4		NOT ASSIGNED			
Q 5		DIODE 1S2837 (AS)		1	
S 1		SWITCH HL21-NS		1	
S 2		SWITCH HL21-LSYG		1	
S 3		SWITCH HL21-NS		1	

Rev. No./Date | DESIGNED BY H. Watanabe | DRAWN BY | CHECKED BY S. Nakagawa | APPROVED BY M. Tada | Dep.

◇ : Selected at factory | DRAWING No. 44W86750 | 1/1

No.D073-1988.11 | ANRITSU CORP.

Parts List of: ME4510B 25
DMSA RX
A11 FILTER

Ref. No.	Part Code	Description	Rating	Qty	Note
C 1		AL ELECTLT CAP CE04C1A471A	470μ F ± 20%.10V	1	
C 2		AL ELECTLT CAP CE04C1C471A	470μ F ± 20%.16V	2	◇PARALLEL
C 3		AL ELECTLT CAP CE04C1C471A	470μ F ± 20%.16V	1	
C 4		AL ELECTLT CAP CE04C1E471A	470μ F ± 20%.25V	1	
C 5		AL ELECTLT CAP CE04C1E471A	470μ F ± 20%.25V	1	
C 6		AL ELECTLT CAP SXE10VB-470M H15	470μ F ± 20%.10V	1	
C 7		AL ELECTLT CAP SXE16VB-390M J15	390μ F ± 20%.16V	1	
C 8		AL ELECTLT CAP SXE16VB-390M J15	390μ F ± 20%.16V	1	
C 9		AL ELECTLT CAP SXE25VB-470M K15	470μ F ± 20%.25V	1	
C 10		AL ELECTLT CAP SXE25VB-470M K15	470μ F ± 20%.25V	1	
C 11		PLSTC FILM CAP ECQ-M1H223KZ	0.022μ F ± 10%.50V	1	
F 1		FUSE MF51NN250V8ADC01	DC250V8A	1	
F 2		FUSE MF51NN250V3.15ADC01	DC250V3.15A	1	
F 3		FUSE MF51NN250V2ADC01	DC250V2A	1	
F 4		FUSE MF51NN250V2ADC01	DC250V2A	1	
F 5		FUSE MF51NN250V2ADC01	DC250V2A	1	
J 1		PLUG DF1-10P2.5DSA	10PINS	1	
J 2		PLUG DF1-10P2.5DSA	10PINS	1	
J 3		PLUG DF1-20P2.5DSA	20PINS	1	

Rev. No./Date | DESIGNED BY | DRAWN BY | CHECKED BY | APPROVED BY | Dep.

◇ Selected at factory | DRAWING No. 44W86751 -02 | 1/2

b TEK 1993 07 | ANRITSU CORP.

Parts List of: A12 MOTHERBOARD 26

Ref. No.	Part Code	Description	Rating	Qty	Note
L 1		INDUCTOR SN-12-400		1	
L 2		INDUCTOR SN-10-300		1	
L 3		INDUCTOR SN-10-300		1	
L 4		INDUCTOR SN-10-300		1	
L 5		INDUCTOR SN-5-300		1	
R 1		CARBON FILM RES ARD25T472J	4.7k Ω ± 5%.1/4W	1	

* : Selected at factory

DRAWING No. 44W86751 -02 2/2

ANRITSU CORP.

Ref. No.	Part Code	Description	Rating	Qty	Note
C 1		CER CAP CK924F1H104Z	0.1μ F.50V +80/-20%	1	
C 2		CER CAP CK924F1H104Z	0.1μ F.50V +80/-20%	1	
C 3		AL ELECTLT CAP CE04C1E101A	100μ F ± 20%.25V	1	
J 1		JACK DIN41612-90SB		1	
J 2		JACK DIN41612-90SB		1	
J 3		JACK DIN41612-90SB		1	
J 4		JACK DIN41612-90SB		1	
J 5		JACK DIN41612-90SB		1	
J 6		JACK DIN41612-90SB		1	
J 7		JACK DIN41612-90SB		1	
J 8		JACK DIN41612-90SB		1	
J 9		PLUG CNF3-30P-2.54DS	30P	1	
J 10		JACK 225J-21028-197		1	
J 11		PLUG DF1-20P2.5DSA	20P	1	
J 12		PLUG DF1-15P2.5DS	15P	1	
J 13		CABLE CNF23-30D-AA020S		1	
J 14		RECEPTACLE 27DP-LR-PC		1	
J 15		JACK DIN41612-20SB		1	
J 16		PLUG DF1-5P2.5DS	5P	1	
J 17		PLUG DF1-2P2.5DS	2P	1	
J 18		PLUG DF1-2P2.5DS	2P	1	
J 19		PLUG CNF3-26P-2.54DS	26P	1	RS-232C

* : Selected at factory

DRAWING No. 44W86752 1/2

ANRITSU CORP.

Parts List of: A12 MOTHERBOARD

Ref. No.	Part Code	Description	Rating	Qty	Note
J 20		PLUG DF1-8P2.5DS	8P	1	RF IN/OUT
Q 1		IC μ PC1630SHF		1	
Q 2		TR 2SD1593		1	
R 1		CARBON FILM RES ARD25T471J	470Ω ± 5%.1/4W	1	
R 2		METAL FILM RESISTOR RS2FS220JL		1	

* : Selected at factory

DRAWING No. 44W86752 2/2

ANRITSU CORP.

Parts List of: A13 GP-IB CONNECTOR BOARD 27

Ref. No.	Part Code	Description	Rating	Qty	Note
C 1	2194-YOTOS	AL ELECTLT CAP CE04C1HO10A	1μ F ± 20%.50V	1	
C 2		CER CAP CK733F1H104Z (A 5	0.1μ F.50V +80/-20%	1	
C 3		CER CAP CK733F1H104Z (A 5	0.1μ F.50V +80/-20%	1	
C 4		CER CAP CK733F1H104Z (A 5	0.1μ F.50V +80/-20%	1	
C 5		CER CAP CK733F1H104Z (A 5	0.1μ F.50V +80/-20%	1	
C 6		CER CAP CK732B1H222K (J 3	2200p F ± 10%.50V	1	
C 7		CER CAP CK733F1H104Z (A 5	0.1μ F.50V +80/-20%	1	
C 8		NOT ASSIGNED			
C 9		CER CAP CK733F1H104Z (A 5	0.1μ F.50V +80/-20%	1	
C 10		CER CAP CK733F1H104Z (A 5	0.1μ F.50V +80/-20%	1	
C 11		CER CAP CK733F1H104Z (A 5	0.1μ F.50V +80/-20%	1	
C 12		CER CAP CK733F1H104Z (A 5	0.1μ F.50V +80/-20%	1	
J 1		PLUG CNF3-30P-2.54DSA	30P	1	
J 2		NOT ASSIGNED			
J 3		57-20240-8035		1	
J 4		PLUG DF1-15P2.5DSA	15P	1	
J 5		NOT ASSIGNED			
J 6		TCSO284-01-010 DIN		1	
J 7		PLUG DF1-5P2.5DSA	5P	1	
J 8		NOT ASSIGNED			
J 9		PLUG BNC-R-NI		1	

* : Selected at factory

DRAWING No. 44W86753 1/2

ANRITSU CORP.

Parts List of: A13 GP-IB CONNECTOR BOARD

Ref. No.	Part Code	Description	Rating	Qty	Note
Q 1		IC μPD71055C/-10		1	
Q 2		IC μ PD7210C		1	
Q 3		IC SN75160BN		1	
Q 4		IC SN75161BN		1	
Q 5		IC 74ALS04BF		1	
Q 6		IC 74ALS00AF		1	
Q 7		IC 74LS645-1N		1	
Q 8		IC 74LS32F		1	
Q 9		IC 74LS367AF		1	
R 1		RES ARRAY RRS-8-103JA	10KΩ ± 5%	1	
R 2		CERMET RESISTOR RK73M2A472J	4.7KΩ ± 5%.1/10W	1	
R 3		CERMET RESISTOR RK73M2A331J	330Ω ± 5%.1/10W	1	
R 4		CERMET RESISTOR RK73M2A103J	10KΩ ± 5%.1/10W	1	
S 1		SLIDE SWITCH DISS8A		1	
S 2		SLIDE SWITCH DISS4A		1	

* Selected at factory — DRAWING No. 44W86733 — 2/2

No.D073-1988.11 ANRITSU CORP.

Parts List of: A16 RS-232C BOARD 28

Ref. No.	Part Code	Description	Rating	Qty	Note
C 1		CER CAP CK733F1H104Z (A 5	0.1μ F.50V +80/-20%	1	
C 2		CER CAP CK733F1H104Z (A 5	0.1μ F.50V +80/-20%	1	
C 3		CER CAP CK733F1H104Z (A 5	0.1μ F.50V +80/-20%	1	
C 4		CER CAP CK733F1H104Z (A 5	0.1μ F.50V +80/-20%	1	
C 5		CER CAP CK733F1H104Z (A 5	0.1μ F.50V +80/-20%	1	
C 6		CER CAP CK733F1H104Z (A 5	0.1μ F.50V +80/-20%	1	
C 7		CER CAP CK733F1H104Z (A 5	0.1μ F.50V +80/-20%	1	
C 8		AL ELECTLT CAP CE04C1A221A	220μ F ± 20%.10V	1	
C 9		NOT ASSIGNED			
C 10		CER CAP CK733F1H104Z (A 5	0.1μ F.50V +80/-20%	1	
C 11		CER CAP CK733F1H104Z (A 5	0.1μ F.50V +80/-20%	1	
C 12		AL ELECTLT CAP CE04C1H2R2A	2.2μ F ± 20%.50V	1	
C 13		CER CAP CK733F1H104Z (A 5	0.1μ F.50V +80/-20%	1	
C 14		CER CAP CK733F1H104Z (A 5	0.1μ F.50V +80/-20%	1	
C 15		CER CAP CK733F1H104Z (A 5	0.1μ F.50V +80/-20%	1	
C 16		CER CAP CK733F1H104Z (A 5	0.1μ F.50V +80/-20%	1	
C 17		CER CAP CK733F1H104Z (A 5	0.1μ F.50V +80/-20%	1	
C 18		CER CAP CK733F1H104Z (A 5	0.1μ F.50V +80/-20%	1	
C 19		CER CAP CK733F1H104Z (A 5	0.1μ F.50V +80/-20%	1	
C 20		CER CAP CK733F1H104Z (A 5	0.1μ F.50V +80/-20%	1	
C 21		CER CAP CK733F1H104Z (A 5	0.1μ F.50V +80/-20%	1	
C 22		CER CAP CK733F1H104Z (A 5	0.1μ F.50V +80/-20%	1	
C 23		CER CAP CK733F1H104Z (A 5	0.1μ F.50V +80/-20%	1	

* Selected at factory — DRAWING No. 44W95081 — 1/7

No.D073-1988.11 ANRITSU CORP.

Parts List of: A16 RS-232C BOARD

Ref. No.	Part Code	Description	Rating	Qty	Note
C 24		CER CAP CK733F1H104Z (A 5	0.1μ F.50V +80/-20%	1	
C 25		CER CAP CK733F1H104Z (A 5	0.1μ F.50V +80/-20%	1	
C 26		CER CAP CK733F1H104Z (A 5	0.1μ F.50V +80/-20%	1	
C 27		CER CAP CC732CH1H150J (E b	15p F ± 5%.50V	1	
C 28		CER CAP CK733F1H104Z (A 5	0.1μ F.50V +80/-20%	1	
C 29		CER CAP CK733F1H104Z (A 5	0.1μ F.50V +80/-20%	1	
C 30		CER CAP CK733F1H104Z (A 5	0.1μ F.50V +80/-20%	1	
C 31		CER CAP CK733F1H104Z (A 5	0.1μ F.50V +80/-20%	1	
C 32		CER CAP CK733F1H104Z (A 5	0.1μ F.50V +80/-20%	1	
C 33		CER CAP CK733F1H104Z (A 5	0.1μ F.50V +80/-20%	1	
C 34		CER CAP CK733F1H104Z (A 5	0.1μ F.50V +80/-20%	1	
C 35		CER CAP CK733F1H104Z (A 5	0.1μ F.50V +80/-20%	1	
C 36		CER CAP CK733F1H104Z (A 5	0.1μ F.50V +80/-20%	1	
C 37		CER CAP CK733F1H104Z (A 5	0.1μ F.50V +80/-20%	1	
C 38		CER CAP CK733F1H104Z (A 5	0.1μ F.50V +80/-20%	1	
C 39		CER CAP CK733F1H104Z (A 5	0.1μ F.50V +80/-20%	1	
C 40		CER CAP CK733F1H104Z (A 5	0.1μ F.50V +80/-20%	1	
C 41		CER CAP CK733F1H104Z (A 5	0.1μ F.50V +80/-20%	1	
C 42		CER CAP CK733F1H104Z (A 5	0.1μ F.50V +80/-20%	1	
C 43		CER CAP CK733F1H104Z (A 5	0.1μ F.50V +80/-20%	1	
C 44		AL ELECTLT CAP CE04C1E470A	47μ F ± 20%.25V	1	
C 45		CER CAP CK733F1H104Z (A 5	0.1μ F.50V +80/-20%	1	
C 46		CER CAP CK733F1H104Z (A 5	0.1μ F.50V +80/-20%	1	

* Selected at factory — DRAWING No. 44W95081 — 2/7

No.D073-1988.11 ANRITSU CORP.

Parts List of: A16 RS-232C BOARD

Ref. No.	Part Code	Description	Rating	Qty	Note
C 47		CER CAP CK733F1H104Z (A 5	0.1μ F.50V +80/-20%	1	
C 48		CER CAP CK733F1H104Z (A 5	0.1μ F.50V +80/-20%	1	
C 49		CER CAP CK733F1H104Z (A 5	0.1μ F.50V +80/-20%	1	
C 50		CER CAP CK733F1H104Z (A 5	0.1μ F.50V +80/-20%	1	
C 51		CER CAP CK733F1H104Z (A 5	0.1μ F.50V +80/-20%	1	
C 52		CER CAP CK733F1H104Z (A 5	0.1μ F.50V +80/-20%	1	
C 53		CER CAP CK733F1H104Z (A 5	0.1μ F.50V +80/-20%	1	
C 54		CER CAP CK733F1H104Z (A 5	0.1μ F.50V +80/-20%	1	
C 55		CER CAP CK733F1H104Z (A 5	0.1μ F.50V +80/-20%	1	
C 56		NOT ASSIGNED			
C 57		CER CAP CK733F1H104Z (A 5	0.1μ F.50V +80/-20%	1	
J 1		PLUG DIN41612-90P8		1	
J 2		NOT ASSIGNED			
L 1		INDUCTOR SP0408-1R0K	1.0μ H.± 10%	1	
Q 1		IC Z0840004PSC		1	W/SOCKET
Q 2		IC 74LS244F		1	
Q 3		IC 74LS244F		1	
Q 4		IC 74LS245F		1	
Q 5		IC 74LS42F		1	

* Selected at factory — DRAWING No. 44W95081 — 3/7

No.D073-1988.11 ANRITSU CORP. M-1

Parts List of: A16 RS-232C BOARD

Ref. No.	Part Code	Description	Rating	Qty	Note
Q 6		IC EPROM32KX8-15C		1	W/SOCKET
Q 7	1319-18133	IC SRAM8KX8-C		1	
Q 8		IC TL7705CPS-8		1	
Q 9		IC 74LS04F		1	
Q 10		IC 74LS08F		1	
Q 11		NOT ASSIGNED			
Q 12		IC 74LS08F		1	
Q 13		IC 74LS32F		1	
Q 14		IC 74LS04F		1	
Q 15		IC 74LS155F		1	
Q 16		IC 74LS74AF		1	
Q 17		IC 74LS244F		1	
Q 18		IC 74LS32F		1	
Q 19		IC 74LS00F		1	
Q 20		IC 74LS14F		1	
Q 21		IC 74LS32F		1	
Q 22		IC 74LS138F		1	
Q 23		IC 74LS244F		1	
Q 24		IC μ PD71059C-/10		1	
Q 25		IC 74LS138F		1	
Q 26		IC 74LS245F		1	
Q 27		IC 74LS00F		1	
Q 28		IC LX2822P		1	

Rev. No./Date | CHECKED BY | APPROVED BY | Dep.

• Selected at factory

DRAWING No. 44095(18)

4/7

No. 0073-1988.11

ANRITSU CORP.

Parts List of: A16 RS-232C BOARD

Ref. No.	Part Code	Description	Rating	Qty	Note
Q 29		IC LX2822P		1	
Q 30		IC LX2822P		1	
Q 31		IC 74LS240F		1	
Q 32		IC μ PD8251AFC		1	
Q 33		IC SN75188N		1	
Q 34		IC SN75189N		1	
Q 35		NOT ASSIGNED			
Q 36		IC COM8146		1	
Q 37		IC 74LS74AF		1	
Q 38		NOT ASSIGNED			
Q 39		NOT ASSIGNED			
Q 40		IC 74LS32F		1	
Q 41		IC 74LS245F		1	
Q 42		IC 74LS541F		1	
Q 43		IC 74LS541F		1	
Q 44	1319-18133	IC SRAM8K×8-C		1	
Q 45		IC 74LS245F		1	
Q 46		IC 74LS541F		1	
Q 47		IC 74LS541F		1	
Q 48		IC 74LS138F		1	
Q 49		IC 74LS74AF		1	
Q 50		IC 74LS08F		1	
Q 51		IC 74LS161F		1	

Rev. No./Date | CHECKED BY | APPROVED BY | Dep.

• Selected at factory

DRAWING No. 44095081

5/7

No. 0073-1988.11

ANRITSU CORP.

Parts List of: A16 RS-232C BOARD

Ref. No.	Part Code	Description	Rating	Qty	Note
Q 52		IC 74LS125AF		1	
Q 53		IC 74LS32F		1	
Q 54		IC 74LS04F		1	
Q 55		IC LX2822P		1	
Q 56		IC LX2822P		1	
Q 57		IC 74LS74AF		1	
R 1		RES ARRAY RRS-4-103JA	10KΩ ± 5%	1	
R 2		METAL FILM RESISTOR RN14K2E2001D	2k Ω ± 0.5%,1/4W	1	
R 3		NOT ASSIGNED			
R 4		NOT ASSIGNED			
R 5		RES ARRAY RRS-4-103JA	10KΩ ± 5%	1	
R 6		CERMET RESISTOR RK73M2A821J	820Ω ± 5%,1/10W	1	
R 7		CERMET RESISTOR RK73M2A821J	820Ω ± 5%,1/10W	1	
R 8		CERMET RESISTOR RK73M2A821J	820Ω ± 5%,1/10W	1	
R 9		RES ARRAY RRS-8-472JA	4.7KΩ ± 5%	1	
R 10		RES ARRAY RRS-8-472JA	4.7KΩ ± 5%	1	
R 11		RES ARRAY RRS-8-472JA	4.7KΩ ± 5%	1	
R 12		RES ARRAY RRS-8-103JA	10KΩ ± 5%	1	
R 13		CERMET RESISTOR RK73M2A472J	4.7KΩ ± 5%,1/10W	1	
R 14		CERMET RESISTOR RK73M2A332J	3.3KΩ ± 5%,1/10W	1	
R 15		CERMET RESISTOR RK73M2A472J	4.7KΩ ± 5%,1/10W	1	

Rev. No./Date | CHECKED BY | APPROVED BY | Dep.

• Selected at factory

DRAWING No. 44095081

6/7

No. 0073-1988.11

ANRITSU CORP.

Parts List of: A16 RS-232C BOARD

Ref. No.	Part Code	Description	Rating	Qty	Note
R 16		CERMET RESISTOR RK73M2A821J	820Ω ± 5%,1/10W	1	
R 17		CERMET RESISTOR RK73M2A821J	820Ω ± 5%,1/10W	1	
R 18		RES ARRAY RRS-4-103JA	10KΩ ± 5%	1	
R 19		RES ARRAY RRS-8-103JA	10KΩ ± 5%	1	
S 1		SLIDE SWITCH DISS8A		1	
S 2		SLIDE SWITCH DISS8A		1	
S 3		SLIDE SWITCH DISS4A		1	
X 1		XTAL 34X73400		1	
Z 1		XTAL OSC EXO-3C16MHZ		1	

Rev. No./Date | CHECKED BY | APPROVED BY | Dep.

• Selected at factory

DRAWING No. 44095081

7/7

No. 0073-1988.11

ANRITSU CORP.

APPENDIX A
INSTALLATION OF OPTION 01 RS-232C

1. Supplied Parts

Confirm the following parts supplied for the modification.

- For Transmitter

Name	Qty.	Remarks
A7 RS-232C PC Board	1	34Y98249A
HDBB-25S Cable (with DF1-8S2.5R24-25 connector)	1	J22/23
Screw (3NPS6B3) with Spring Washer	7	

- For Receiver

Name	Qty.	Remarks
A16 RS-232C PC Board	1	34Y98249B
FDBD-250DSUB Cable	1	W15

2. Installation

2.1 Transmitter

(1) RS-232C PC Board

Install A7 RS-232C BOARD in accordance with Fig. 2-3 of Section 2 in this manual.

Step	Procedure
1.	Remove the top cover.
2.	Fix A7 RS-232C PC board to the position ③ on A3 CPU BOARD (position ②).
3.	Connect A7-J2 connector with A3-J6 connector.

(2) RS-232C Connector

Install the RS-232C connector in accordance with Fig. 2-2 of Section 2 in this manual.

Step	Procedure
1.	Remove the rear panel.
2.	Fix HDBB-25S Cable (J22/23 RS-232C connector) on the rear panel.
3.	Connect J22 to A7-J1.
4.	Reassemble the rear panel.

2.2 Receiver

(1) RS-232C PC Board

Install A16 RS-232C BOARD in accordance with Fig. 2-7 of Section 2 in this manual.

Step	Procedure
1.	Remove top cover then the cover plate ⑫.
2.	Insert A16 RS-232C PC board to the position ⑤.

(2) RS-232C Connector

Install the RS-232C connector in accordance with Fig. 2-6 of Section 2 in this manual.

Step	Procedure
1.	Remove the rear panel.
2.	Fix W15 FDBD-250DSUB Cable (RS-232C cable) on the rear panel.
3.	Connect the RS-232C connector to A12 MOTHER BOARD - J19.
4.	Reassemble the rear panel.

3. Initial Setting of Function Switches

Set function switches on the RS-232C PC boards on both the transmitter and the receiver as follows.

(1) Setting the parity and stop bits

Set switch S2 on the RS-232C PC board (in paragraph (3)) as shown below.

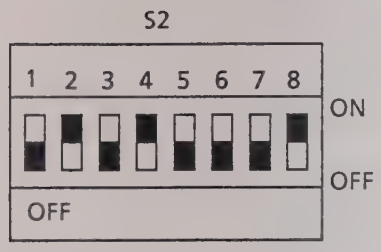

Example: Settings at shipment

① Parity : Disabled
② Stop bit : 1 bit
③ XON / XOFF : Disabled
④ DTR signal : Enabled

Item	Switch S2			
	OFF	ON		No.
Parity enable	Enabled	Disabled		2
Parity type	Odd	Even		3
Stop bit	No.	4	5	4
	1 bit	ON	OFF	5
	1½ bits	OFF	ON	
	2 bits	ON	ON	
XON / XOFF sending	Disabled	Enabled		7
DTR Signal	Disabled	Enabled		8

Note: Nos. 1 and 6 in switch S2 are not used.

(2) Setting baud rate

Set switch S3 on the RS-232C PC board (in paragraph (3)) as shown below.

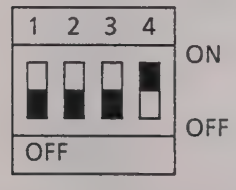

Example: Settings at shipment

Baud rate : 1200 bps

Baud rate (bps)	S3 switch No.			
	1	2	3	4
300	OFF	ON	OFF	ON
600	ON	OFF	OFF	ON
1200	OFF	OFF	OFF	ON
2400	ON	OFF	ON	OFF

(3) RS-232C PC board

(a) Transmitter A7 RS-232C PC board

Set function switches S2 and S3 according to the procedures described in paragraphs (1) and (2) in previous pages.

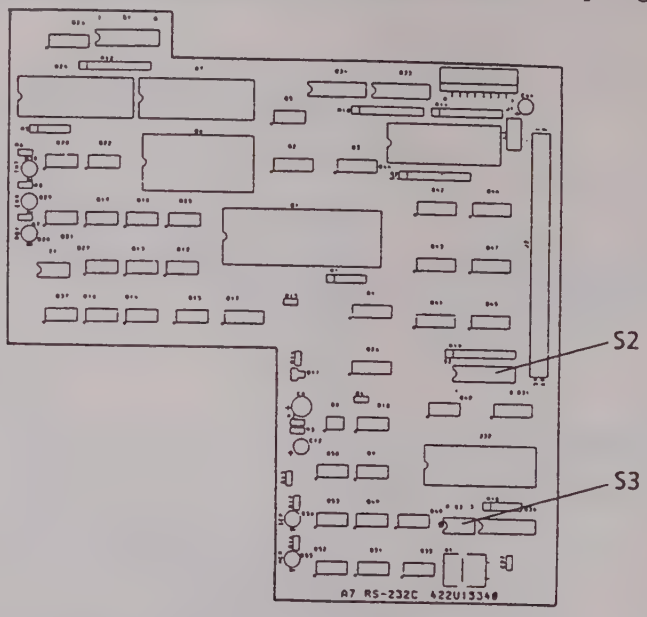

(b) Receiver A16 RS-232C PC board

Set function switches S2 and S3 according to the procedures described in paragraphs (1) and (2) in previous pages.

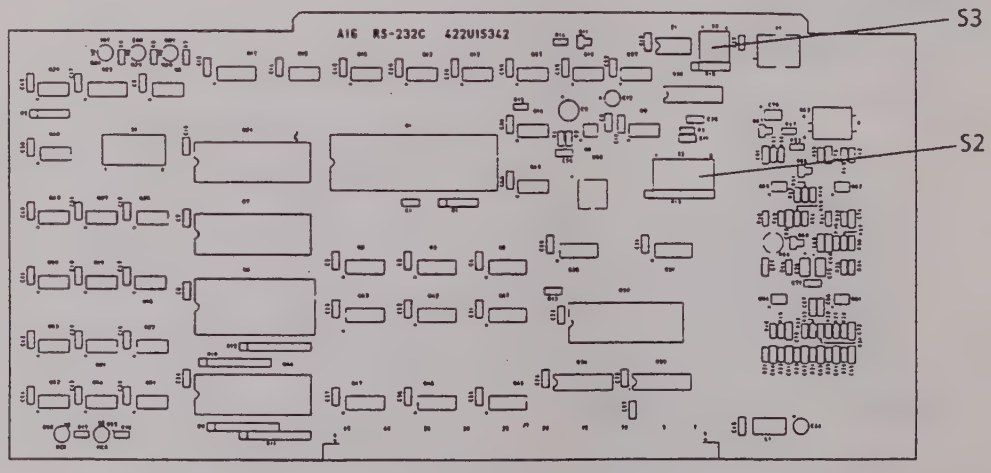

After the above settings are completed, reassemble both the transmitter and receiver top covers.

4. Operation Check

Confirm the operation of RS-232C Interface by connecting the ME4510B DMSA completing the modification to a controller (ex. Personal Computer) in accordance with Section 8 RS-232C in the Operation Manual.

Anritsu

ANRITSU CORPORATION
5-10-27, Minamiazabu, Minato-ku, Tokyo, 106-8570 Japan
PHONE. 03-3446-1111
TELEX J 34372 ANRITU

www.manualsplus.com
1021447